JUKI®

COMPUTER SEWING MACHINE

HZL-NX7

INSTRUCTION MANUAL

EN

⚠ Attention	**Please read this instruction manual before using the machine as it contains important operational and safety information.** **Keep this manual accessible so that you may refer to it at anytime while operating the machine.**

“IMPORTANT SAFETY INSTRUCTIONS”

When using an electrical appliance, basic safety precautions should always be followed, including the following: Read all instructions before using this sewing machine.

“DANGER ___ To reduce the risk of electric shock:”

1. The appliance should never be left unattended when plugged in.
2. Always unplug this appliance from the electric outlet immediately after using and before cleaning.

“WARNING ___ To reduce the risk of burns, fire, electric shock, or injury to persons:”

1. Do not allow this appliance to be used as a toy. Close attention is necessary when this appliance is used by or near children. This appliance can be used by children aged from 8 years and above and persons with reduced physical, sensory or mental capabilities or lack of experience and knowledge if they have been given supervision or instruction concerning use of the appliance in a safe way and understand the hazards involved. Children shall not play with the appliance. Cleaning and user maintenance shall not be made by children without supervision.
2. Use this appliance only for its intended use as described in this manual. Use only attachments recommended by the manufacturer as contained in this manual.
3. Never operate this appliance if it has a damaged cord or plug, if it is not working properly, if it has been dropped or damaged, or dropped into water. Return the appliance to the nearest authorized dealer or service center for examination, repair, electrical or mechanical adjustment.
4. Never operate the appliance with any air openings blocked. Keep ventilation openings of the sewing machine and foot control free from the accumulation of lint, dust, and loose cloth.
5. Keep fingers away from all moving parts. Special care is required around the sewing machine needle.
6. Always use the proper stitch plate. The wrong plate can cause the needle to break.
7. Do not use bent needles.
8. Do not pull or push fabric while stitching. It may deflect the needle causing it to break.
9. Switch the sewing machine off “O” when making any adjustments in the needle area, such as changing needle, threading bobbin, or changing presser foot.
10. Always unplug the machine from the electrical outlet when removing covers, when lubricating or when making any other user servicing adjustments mentioned in the instruction manual.
11. Never drop or insert any object into any opening.
12. Do not use outdoors.
13. Do not operate where aerosol (spray) products are being used or where oxygen is being administered.
14. To disconnect, turn all controls to the off “O” position, then remove plug from outlet.
15. Do not unplug by pulling on cord. To unplug, grasp the plug, not the cord.
16. Basically, the machine should be disconnected from the electricity supply when not in use.
17. If the power cord of this appliance is damaged, it must be replaced with a special cord by your nearest authorized dealer or service center.
18. (Except USA/Canada) This machine is provided with double insulation.
    Use only identical replacement parts. See instructions for servicing Double-Insulated machine.

“SERVICING DOUBLE-INSULATED PRODUCTS”

In a double-insulated product, two systems of insulation are provided instead of grounding. No grounding means is provided on a double-insulated product nor should a means for grounding be added to the product. Servicing a double-insulated product requires extreme care and knowledge of the system and should only be done by qualified service personnel. Replacement parts for a double-insulated product must be identical to those parts in the product. A double-insulated product is marked with the words DOUBLE INSULATION or DOUBLE INSULATED.
The symbol ⧈ may also be marked on the product.

“SAVE THESE INSTRUCTIONS”

“This sewing machine is intended for household use only.”

Congratulations on your purchase of a JUKI sewing machine.
Please be sure to read safety precautions in “To use the sewing machine safely” in the Instruction Manual before use to fully understand the functions and operating procedures of the sewing machine so as to use the sewing machine for a long time.
After you have read the Instruction Manual, please be sure to keep it together with the warranty so that you can read it whenever necessary.

To use the sewing machine safely

Marks and pictographs included in the Instruction Manual and shown on the sewing machine are used so as to ensure safe operation of the sewing machine and to prevent possible risk of injury to the user and other people.
Warning marks are used for different purposes as described below.

⚠ **WARNING**	**Indicates that there is a possible risk of death or serious injury if this mark is ignored and the sewing machine is used in a wrong manner.**
⚠ **ATTENTION**	**Indicates the operation, etc. which can cause a possible risk of personal injury and/or physical damage if this mark is ignored and the sewing machine is used in a wrong manner.**

Pictographs mean the following:

	Danger warning which is not specified		**There is a risk of electrical shock**		**There is a risk of fire**		**There is a risk of injury to hands, etc.**
	Prohibited matter which is not specified		**Disassembly/ alteration is prohibited**		**Do not place fingers under the needle**		**Do not pour oil, etc.**
	Generally required behavior		**Disconnect the power plug**				

⚠ WARNING

For the combination of the material and the thread and needle, in particular, refer to the explanation table in “Replacement of the needle”.
If the needle or thread does not match the material used such as in the case that an extra heavy-weight material (e.g., denim) is sewn with a thin needle (#11 or higher), the needle can break resulting in an unexpected personal injury.

Other precautions

- Do not put the sewing machine under the direct sunlight or in a humid place.

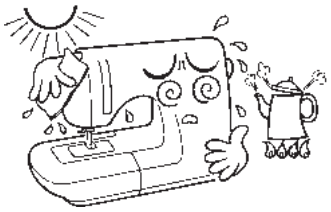

- Do not wipe the sewing machine with solvent such as thinner.

  When the sewing machine is soiled, put a small quantity of neutral detergent on a piece of soft cloth and carefully wipe off the sewing machine with it.

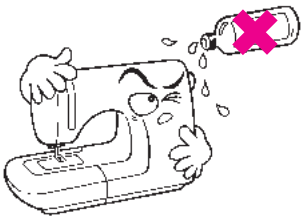

Be aware that the following state can take place since the sewing machine incorporates semi-conductor electronic parts and precise electronic circuits.

- Be sure to use the sewing machine in the temperature range from 5ºC to 40ºC.
  If the temperature is excessively low, the machine can fail to operate normally.

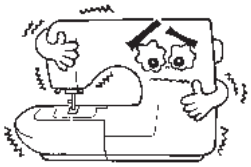

- The safety device of the sewing machine will work to stop the sewing machine in order to prevent the generation of abnormal heat in the case the sewing machine is continuously engaged in sewing at a low sewing speed for a long time or it is continuously engaged in sewing for a long time under the high temperature environment. In this event, Start and Stop button will not light.

  The sewing machine will return to working condition after about 10 minutes.

* The operating temperature of the sewing machine is between 5ºC and 40ºC. Do not use the sewing machine under the direct sunlight, near the burning things such as a stove and candle, or in a humid place. By so doing, the temperature in the interior portion of the sewing machine can rise or the coating of the power cord can melt, causing fire or electrical shock.

Contents

"IMPORTANT SAFETY INSTRUCTIONS" .. 1

Contents 4

1. Configuration and functions 6

1.1. Names and functions of the operational buttons 7

1.2. Names and functions of the operation icons and operational keys 8

2. Accessories 12

3. Set-up 13

3.1. How to install Wide Table 13

3.2. Changing the position of the foot switch .. 14

3.3. Installation of knee lifting lever 15

4. Basic settings and basic operations .. 16

4.1. Connecting to the power supply 16

4.2. Speed control 18

4.3. Lifting/lowering of the presser foot 19

4.4. Changing the presser foot 20

4.5. Placing and releasing "JUKI Smart Feed" .. 22

4.6. Changing the throat plate and the feed dog 23

4.7. How to use the throat plate for straight stitch 24

4.8. Attaching the needle 25

4.9. Fabric, thread and needle table 26

4.10. Bobbin thread preparation 27

4.11. Needle thread preparation 31

4.12. How to adjust thread tension 36

4.13. Setting the presser foot pressure 38

4.14. Setting the micro-lifter 39

4.15. Twin needle sewing 40

4.16. Setting the automatic back tacking, thread trimming and presser foot lifting 42

4.17. Needle positions / Zigzag width / Stitch length 44

4.18. Bobbin thread counter 46

4.19. Setting the stop position of needle 48

4.20. Pivot setting 48

4.21. How to lower the feed dog 49

5. Operation in detail 50

5.1. Options 50

① Standard thread tension setting 51

② Presser foot lifting height 51

③ Screen to set the functions while presser foot is up 52

④ Foot switch functions 53

⑤ Start-up 53

⑥ Adjustable starting stitch speed 54

⑦ Adjustable reverse stitch speed 54

⑧ Darning adjustment 55

⑨ Buzzer volume setting 56

⑩ Brightness adjustment 56

⑪ Selecting language 57

⑫ Initialization / deletion of the settings .. 57

⑬ Firmware update 58

⑭ Machine log 60

5.2. Operation guide 61

5.3. Lock mode 61

5.4. "Return" operation 61

5.5. "Clear" operation 61

6. Setting for the pattern sewing 62

6.1. Single stitching mode / combination stitching mode 62

6.1.1. Single stitching mode 62

6.1.2. Combination stitching mode 62

6.1.3. Setting for the repetition stitching .. 67

6.2. How to select a stitch pattern 68

6.2.1. Practical patterns 68

6.2.2. Decorative patterns 70

6.2.3. Quilt patterns 72

6.2.4. Buttonhole patterns 73

6.2.5. Letters 74

6.2.6. User memory 75

6.2.7. How to select the pattern by selecting its number 76

6.3. Types of edit functions and how to use them 77
6.3.1. Adjusting the darning 77
6.3.2. Pattern inversion 79
6.3.3. Changing the elongation size 80
6.3.4. Changing the tapering size 81
6.3.5. Selecting the combined patterns collectively 81
6.3.6. Deletion 81
6.3.7. Setting the interval between patterns 81
6.3.8. Change of seam width of buttonhole 81

7. Sewing 82
7.1. Straight stitch 82
7.2. Inserting zippers 87
7.3. Patchwork piecing 88
7.4. Overcasting stitch 89
7.5. Blind stitch 90
7.6. Shell tuck 93
7.7. Bartacking 94
7.8. Eyelet 96
7.9. Decorative stitches 97
7.10. Lace / feather patterns 98
7.11. Scallop stitches 99
7.12. Random pattern 100
7.13. Tapering 101
7.14. Hand look quilt stitches 103
7.15. Buttonhole stitches 104
7.16. Manual 2-step buttonhole 110
7.17. Sewing buttons 112
7.18. Quilting (free motion) 113
7.19. Quilting (quilt guide) 115

8. Message catalog 116
9. Machine Maintenance 119
10. Introduction of optional accessory parts 120
11. Performance check list 122
12. List of stitch patterns 124
Specification list ..... back cover

1. Configuration and functions

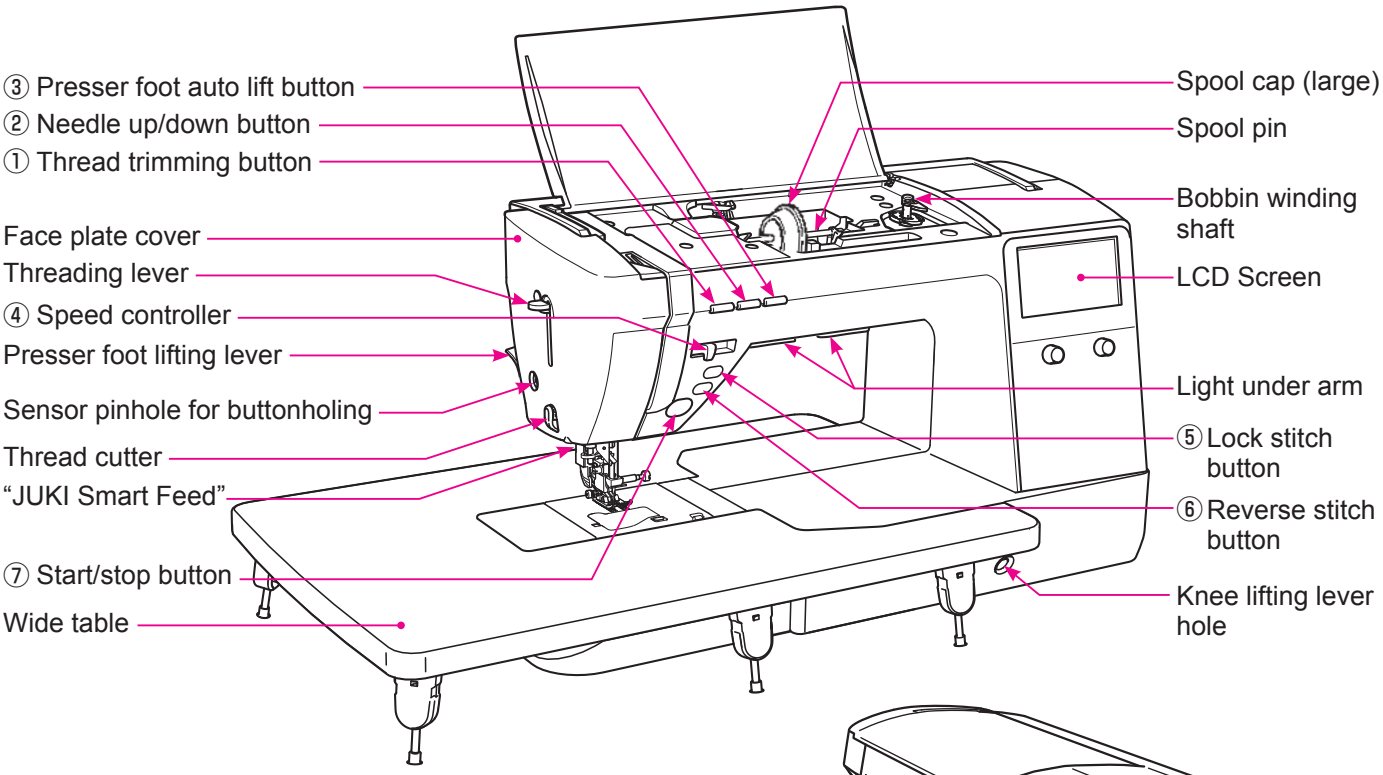

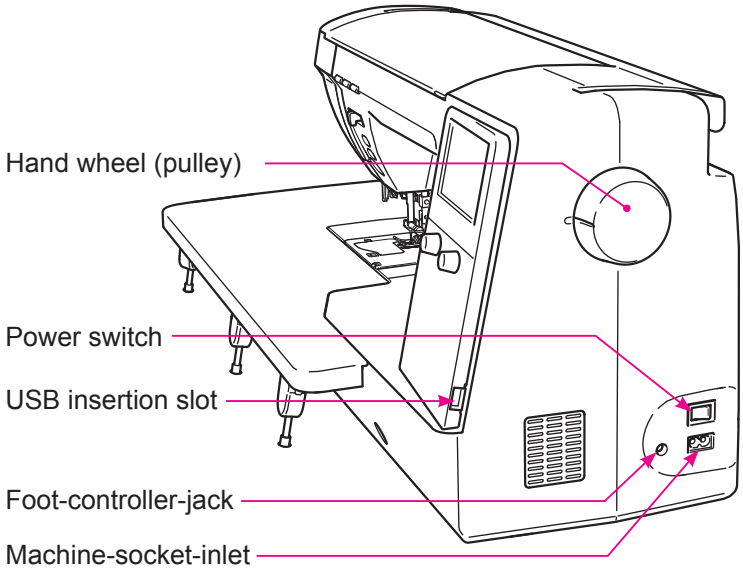

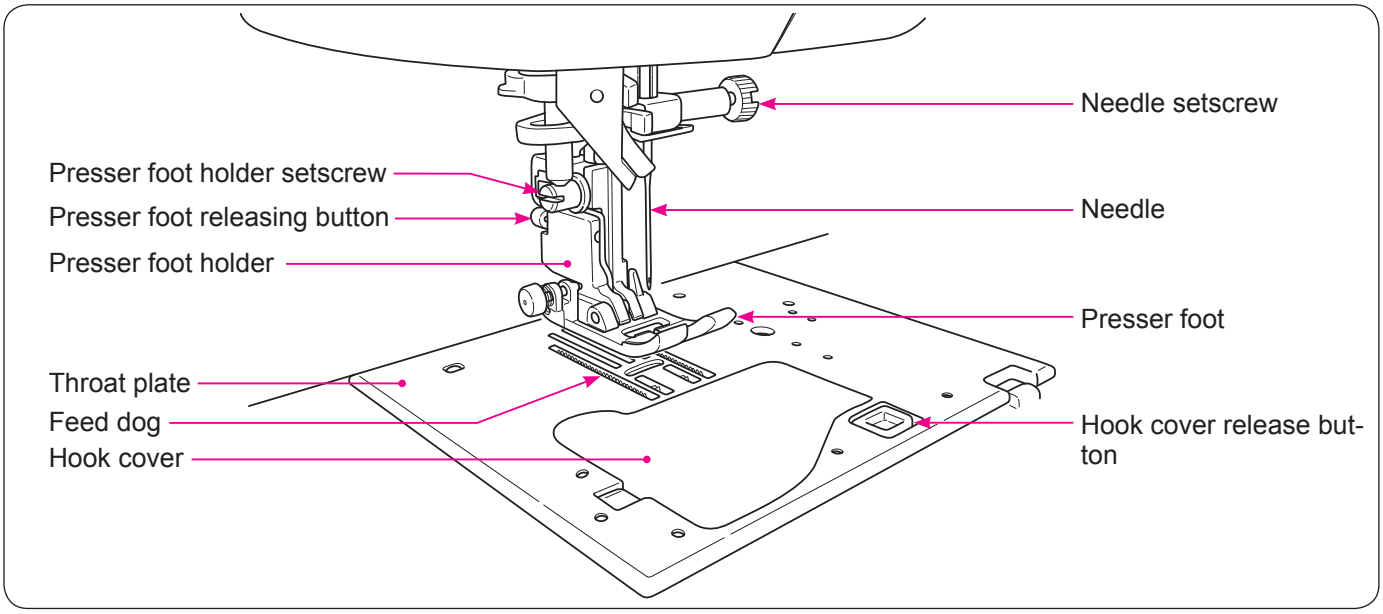

1.1. Names and functions of the operational buttons

		Name	Function
①		**Thread trimming button**	After sewing, press this button to trim both threads automatically. The sewing machine stops with its needle up after thread trimming. In the case of 2-needle setting, this button will not operate even if the thread trimming button is pressed.
②		**Needle up/down button**	When machine stops, press this button to change the needle position. When the needle is up, the needle moves down and vise versa. The sewing machine performs sewing at a low speed by keeping this button held pressed for a long time.
③		**Presser foot auto lift button**	When this button is pressed while the sewing machine is at rest, the presser foot position is changed. When the presser foot is in its upper position,it comes down to its lower position and vice versa. When the presser foot is lifted by operating the presser foot auto lift button, the feed dog is also automatically lowered.
④		**Speed controller**	Sewing speed can be adjusted with the sliding lever of Speed Controller freely. The sewing speed is increased by moving the speed controller to the right, or decreased by moving it to the left. When sewing with foot controller, Max. sewing speed can be set by Speed Controller.
⑤		**Lock stitch button**	When this button is pressed, the sewing machine performs lock stitch. When this button is pressed while the sewing machine is engaged in pattern sewing, the sewing machine stops after it has completed the sewing of the one-cycle/one-point of the pattern.
⑥		**Reverse stitch button**	For straight stitch/zigzag stitch: The sewing machine performs reverse stitch as long as this button is held pressed. For other stitch types: The sewing machine performs lock stitch.
⑦		**Start/stop button**	When pressing this button, machine starts to sew slowly and then up to the speed set by speed controller. Another press of this button stops the sewing machine. Color of button indicates machine status. **Green:** Ready to start and/or while sewing **Red:** Not ready to start **Orange:** When the lock stitch button is pressed while the sewing machine is engaged in pattern sewing (The sewing machine performs lock stitch after it has completed the sewing of the pattern by one cycle. Then, the sewing machine stops.) * When the foot controller is plugged in, the start/stop button cannot be used to start sewing. Start button: Can not operate to start sewing. Stop button: Can operate to stop sewing.

1.2. Names and functions of the operation icons and operational keys

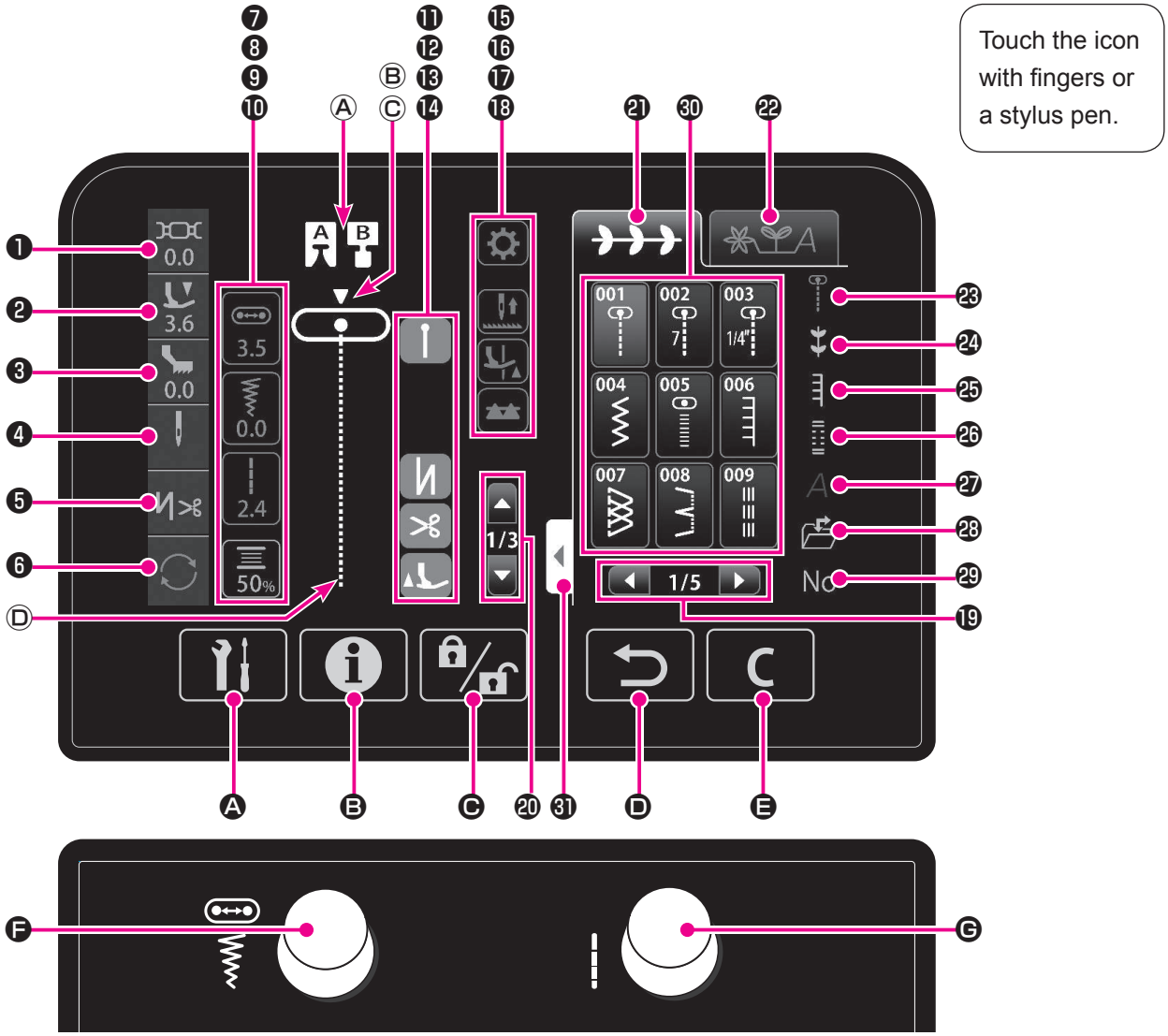

		Name	Function
❶		**Thread tension icon**	Detailed setting of the thread tension is displayed. Press the thread tension icon when you want to change the thread tension. The thread tension set value will be returned to the initial value by selecting a different pattern.
❷		**Presser foot pressure icon**	Presser foot pressure is displayed. Press the presser foot pressure icon when you want to change the pressure foot pressure. The presser foot pressure will be returned to the initial value by re-turning the power ON.
❸		**“JUKI Smart Feed” adjustment icon**	This icon is displayed by placing “JUKI Smart Feed” in position. Adjustment value of “JUKI Smart Feed” can be set.

		Name	Function
❹		**Needle icon**	Detailed setting of the needle is displayed. Press the needle icon when you want to change the setting of the needle. : One needle : Two needles
❺		**Automatic back tacking and thread trimming icon**	The back tacking at the beginning and end of sewing and the back tacking and thread trimming / presser foot lift after thread trimming at the end of sewing can be set.
❻		**Repetition sewing**	Sewing of a pattern under the combination stitching mode in repetition or sewing of a pattern only by one cycle under the single stitching mode can be set. "1" is displayed in the case of sewing a pattern only by one cycle. Initial setting Pattern available under the single stitching mode: Repetition Pattern available under the combination stitching mode: 1
❼		**Needle position icon**	Press the needle position icon when you want to set the adjustment item of adjusting dial (left) to the "needle position".
❽		**Zigzag width icon**	Press the zigzag width icon when you want to set the adjustment item of adjusting dial (left) to the "zigzag width".
❾		**Stitch length icon**	"Stitch length" that is set with the stitch length adjusting dial (right) is displayed.
❿		**Bobbin thread counter icon**	The state of the bobbin thread counter is displayed Press the bobbin thread counter icon when you want to set details of the bobbin thread counter.
⓫		**Sewing-start back tacking icon**	This icon is displayed by setting the back tacking at the beginning of sewing. ON/OFF of the back tacking at the beginning of sewing can be changed over by pressing the sewing-start back tacking icon. : Reverse stitch : Lock stitch
⓬		**Sewing-end back tacking icon**	This icon is displayed by setting the automatic back tacking at the end of sewing. ON/OFF of the back tacking at the beginning of sewing can be changed over by pressing the sewing-end back tacking icon. : Reverse stitch : Lock stitch
⓭		**Thread trimming icon**	This icon is displayed by setting the back tacking and thread trimming. Push icon to turn on/off.
⓮		**Presser foot lift after thread trimming icon**	This icon is displayed by setting presser foot lifting after thread trimming. Push icon to turn on/off.
⓯		**Pattern edit icon**	Stitch patterns can be edited.

		Name	Function
⓰		**Needle stop position changeover icon**	Stop position of the needle (upper or lower position) when stopping the sewing machine can be changed over. : The sewing machine stops with its needle down : The sewing machine stops with its needle up
⓱		**Pivot function icon**	You can select the setting where the presser foot goes up with the needle held in the needle-down stop position when you stop the sewing machine. : Pivot function is OFF : Pivot function is ON
⓲		**Drop feed icon**	Feed Dog can be disengaged or engaged. : Feed Dog is engaged : Feed Dog is disengaged
⓳		**Change the page icon**	Push this icon to change the page.
⓴		**Pattern changeover icon**	Use this icon when you want to change over the pattern under the combination stitching mode.
㉑		**Single stitching tab**	The sewing mode can be set to the single stitching mode by pressing the single stitching tab.
㉒		**Combination stitching tab**	The sewing mode can be set to the combination stitching mode under which two or more patterns are sewn in combination by pressing the combination stitching tab.
㉓		**Practical pattern icon**	Push it to change the screen to utility stitch patterns.
㉔		**Decorative pattern icon**	Push it to change the screen to decorative stitch patterns.
㉕		**Quilt pattern icon**	Push it to change the screen to quilting stitch patterns.
㉖		**Buttonhole pattern icon**	Push it to change the screen to buttonholing patterns.
㉗		**Letter icon**	Push it to change the screen to letters.
㉘		**User memory icon**	Use the user memory icon when you want to select the pattern stored in the user memory.
㉙	No	**No. selection icon**	Push it to change the screen to the one to select the stitch pattern by pattern No.
㉚		**Pattern icon**	It is possible to select stitch pattern.

		Name	Function
㉛		**Selection screen extension tab**	The pattern group display screen can be changed to the full-screen display. The previous screen can be restored by pressing the selection screen extension tab again.
Ⓐ	A B	**Presser Foot**	Suitable presser foot for the stitch pattern is displayed.
Ⓑ	▼	**Needle Position**	Needle position ▼ is displayed.
Ⓒ		**Type of Throat Plate**	The type of throat plate is displayed. : Standard throat plate : Throat plate for straight stitch
Ⓓ	-	**Sewing Condition**	Stitch Pattern which is sewn currently or to be sewn is displayed.
Ⓐ		**Option key**	Setting of 14 types of options can be set. * Available options differs according to the selected stitch pattern.
Ⓑ		**Guide key**	Basic operations can be checked.
Ⓒ		**Lock Mode Key *1**	When pushing it, all the operations are disabled. In order to release the lock mode, press the lock mode key for 1 seconds.
Ⓓ		**Return key**	When pushing it, the screen goes back to the previous page. Combination Pattern mode can delete the selected pattern.
Ⓔ	C	**Clear key**	Setting of Stitch Pattern can be returned to the default setting.
Ⓕ		**Adjusting Dial (Left)**	This dial will be used when adjusting zigzag width or needle position. The zigzag width can be changed by pressing the zigzag width icon. The zigzag width is increased by turning this dial clockwise. The zigzag width is decreased by turning this dial counterclockwise. The needle position can be changed by pressing the needle position icon. The needle is shifted to the right by turning this dial clockwise. The needle is shifted to the left by turning this dial counterclockwise.
Ⓖ		**Adjusting Dial (Right)**	This dial will be used when adjusting stitch length. The stitch length is increased by turning this dial clockwise. The stitch length is decreased by turning this dial counterclockwise.

*** 1**

Lock Mode given in the Instruction Manual means that operation of all keys is disabled by pressing the .
(Refer to page 61)

2. Accessories

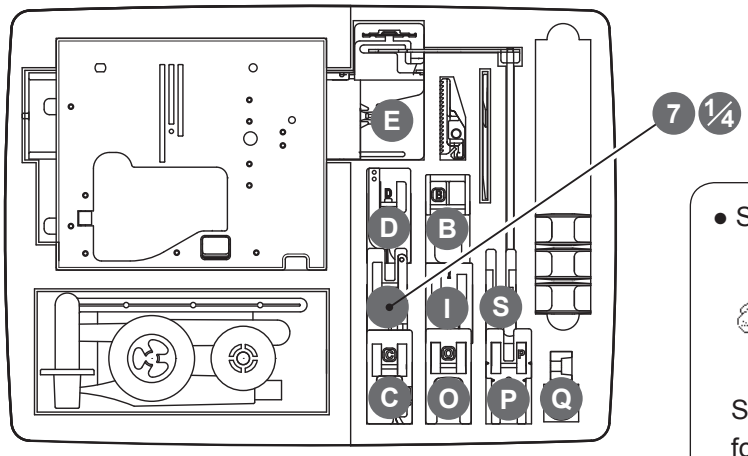

Auxiliary box

● Supplied with the machine

Standard presser foot (A)

Bobbin (1)

Touch pen

Spool cap (large)

● Inside the auxiliary box.

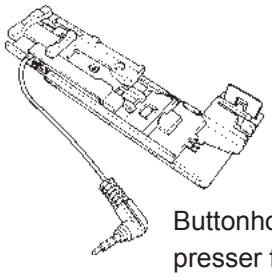

Buttonhole presser foot (E)

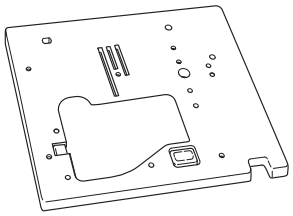

Straight throat plate

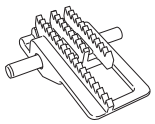

Straight feed dog

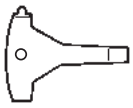

T-shape screwdriver

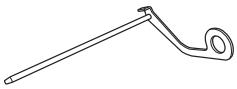

Quilt guide

Bobbin (3)

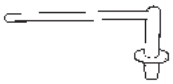

Auxiliary spool pin

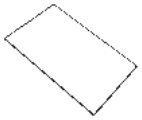

Needle set
HA × 1 # 11 (1)
14 (1)
16 (1)
for knit # 11 (1)

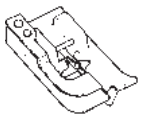

Blind stitch presser foot (D)

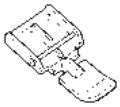

Zipper presser foot (B)

Ripper

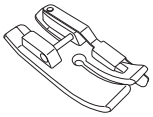

7mm guide foot or 1/4" guide foot

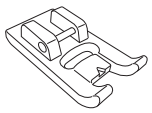

Manual buttonhole presser foot (I)

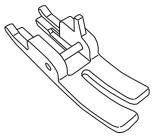

Straight presser foot (S)

Cleaning brush

Spool cap (Small)

Spool cap (Middle)

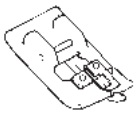

Overcasting presser foot (C)

Open toe presser foot (O)

Patchwork presser foot (P)

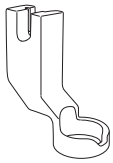

Quilt presser foot (for the ruler) (Q)

● It is contained in the packing.

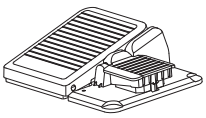

Foot Controller

Knee-lifting lever

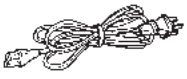

Power cord

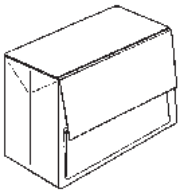

Sewing machine cover

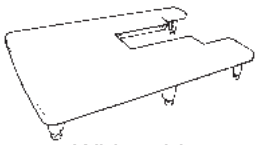

Wide table

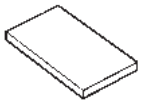

Instruction manual (This manual)

3. Set-up

3.1. How to install Wide Table

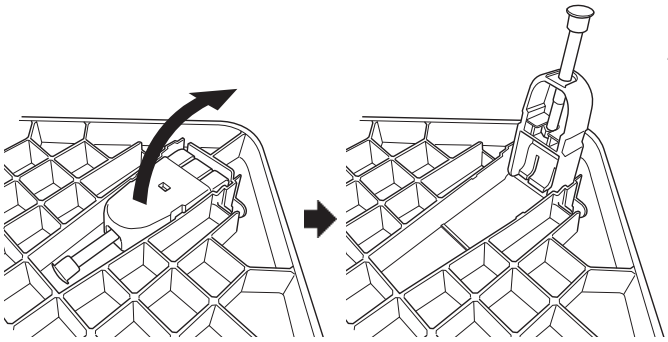

1 **Open legs of Wide Table until they stop securely at the stopping position.**

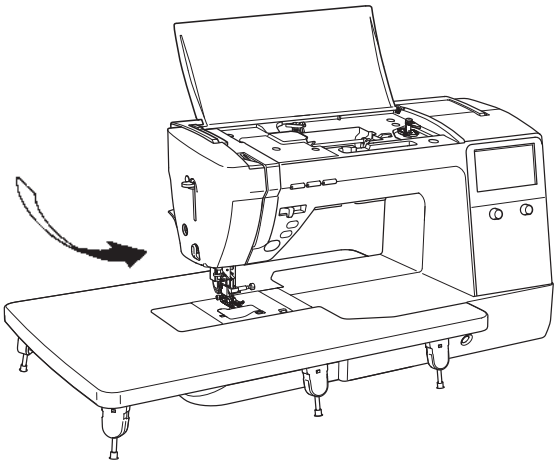

2 **Assemble Wide Table to sewing machine body.**

Attach it to free arm of sewing machine.

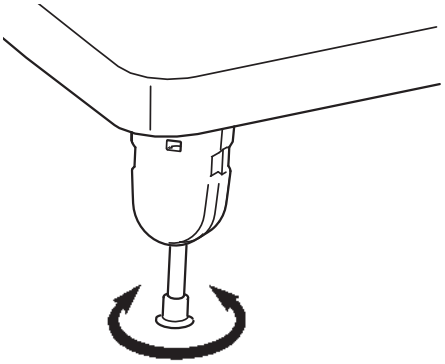

3 **Adjust the height of legs so that the top surface of Wide Table is the same height of sewing machine body.**

*** Don't put any heavy materials on the Wide Table.**
*** Don't move sewing machine with Wide Table attached.**

3.2. Changing the position of the foot switch

The lateral position of the foot switch in reference to the pedal can be changed.
Use the foot switch at your desired position.

Attention	**Unplug the controller before you change the position of the foot switch.**

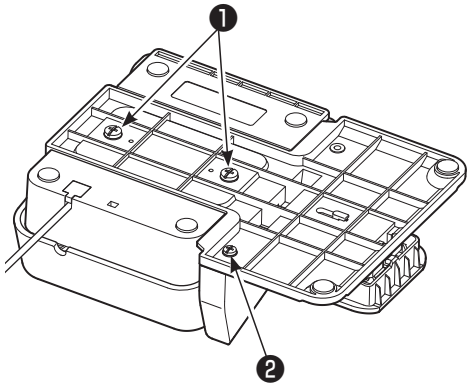

1 **Remove pedal setscrew ❶ and block setscrew ❷ .**

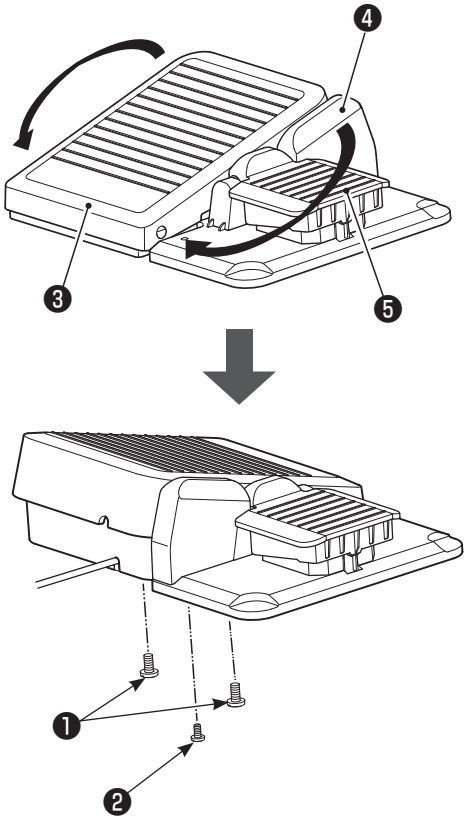

2 **Attach pedal ❸ and block ❹ to the opposite side while turning them in the other way around, and tighten the pedal setscrew and block setscrew.**

❺ Foot switch

3.3. Installation of knee lifting lever

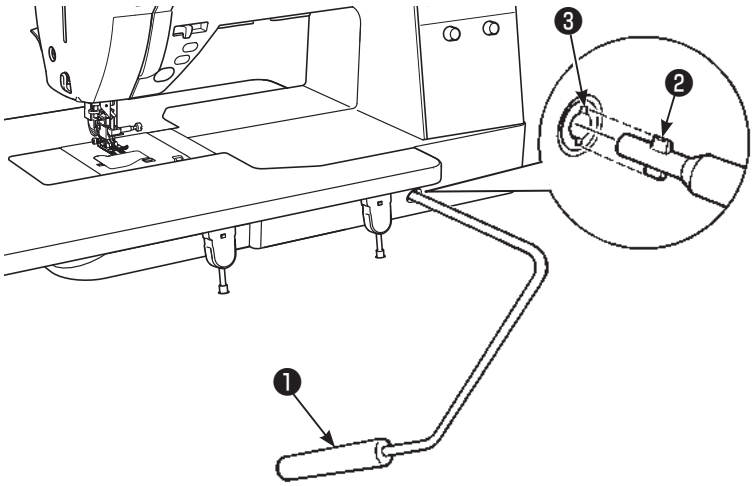

Insert the knee lifting lever ❶ so that concave ❸ and convex ❷ meet.

4. Basic settings and basic operations

4.1. Connecting to the power supply

⚠ **WARNING**	• **Disconnect the plug and turn off the power switch (turn to "O") that always sewing machine is not to use.**

■ Connecting the codes

① Turn OFF the power switch (turn to "O")

⚠ **WARNING (For U.S.A.,Canada only)**

This appliance has a polarized plug (one blade wider than the other). To reduce the risk of electric shock, this plug is intended to fit in a polarized outlet only one way. If the plug does not fit fully in the outlet, reverse the plug. If it still does not fit, contact a qualified electrician to install the proper outlet. Do not modify the plug in any way.

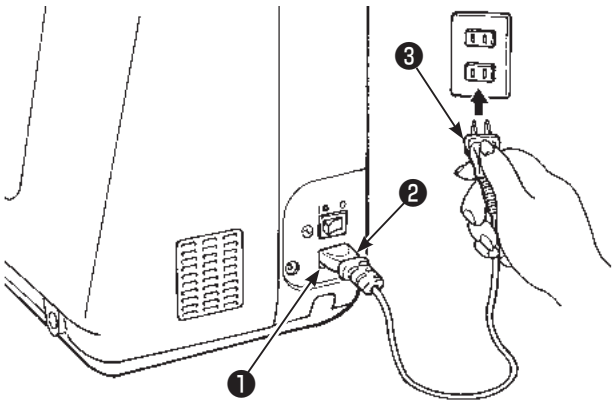

● **Not-using foot-controller that using start/stop-button:**

② Insert cord-connector ❷ into machine-socket-inlet ❶ . Insert plug ❸ into socket-outlet.

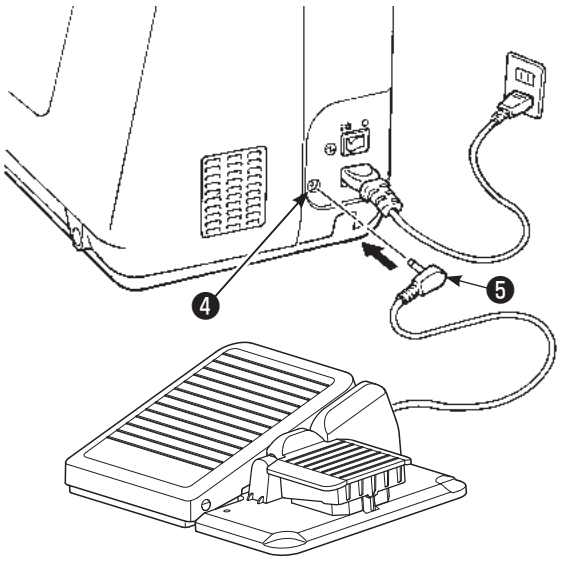

● **Using the foot-controller:**

② Insert the foot-controller-plug ❺ into the foot-controller-jack ❹ .

③ Insert cord-connector into machine-socket-inlet. Insert plug into socket-outlet.

* When the foot controller is plugged in, the start/stop button cannot be used to start sewing.

● Start button: Can not operate to start sewing.

● Stop button: Can operate to stop sewing.

■ Turning the power ON

Turn ON the power switch. (Turn to “I”)

* **Be aware that the presser foot goes up automatically when the power to the sewing machine is turned ON.**

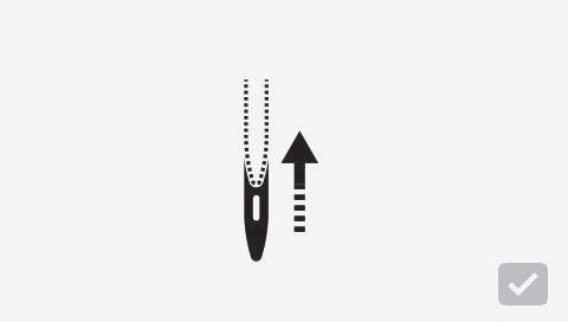

The screen shown on the left when the power to the sewing machine is turned ON.
The needle moves and the screen shown on the left disappears by pressing .

Do not place fingers under the needle

In the case the function of retaining the pattern that has been sewn immediately before stopping the sewing machine is optionally set for the startup, the message shown on the left will be displayed.

4.2. Speed control

■ Speed controller

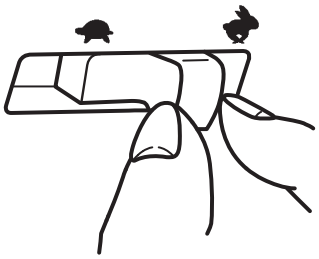

Maximum sewing speed can be freely set by the speed controller.

: Faster speed

: Slower speed

■ Foot controller

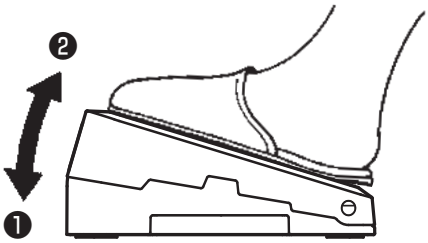

To run the machine, press the foot controller.
The harder you press, the faster the machine sews.
Speed controller will set the maximum sewing speed.

❶ Pressing harder → faster speed
❷ Pressing weaker → slower speed

* Always clean the foot controller.
It is important that you do not place any objects on the foot controller as it may cause injury to the user and may cause malfunctions.

■ Low-speed inching sewing

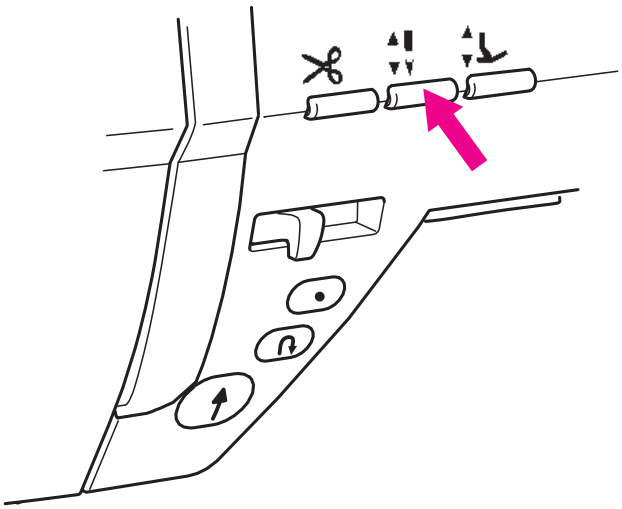

When the needle up/down switch is held pressed, the sewing machine performs sewing at a low speed.

Adjustable starting stitch speed

The sewing speed to be employed at the beginning of sewing can be changed by using the option setting function. (Refer to page 54)

Adjustable reverse stitch speed

The sewing speed for reverse stitch can be changed by using the option setting function. (Refer to page 54)

4.3. Lifting/lowering of the presser foot

■ Presser foot lifting lever

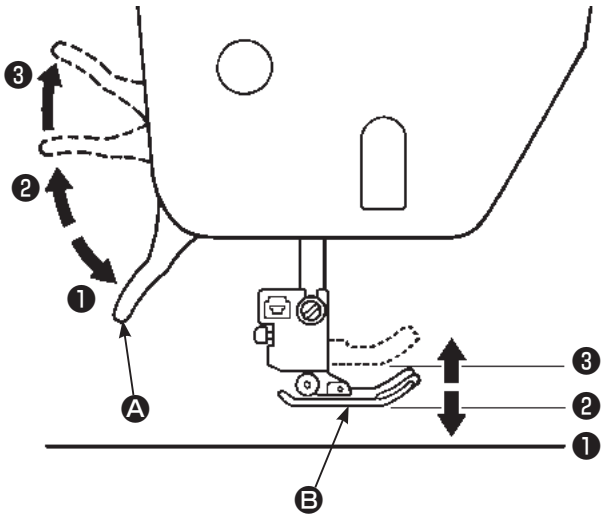

The presser foot Ⓑ is lifted/lowered with the presser foot lifting lever Ⓐ. The presser foot can be lifted higher than the ordinary lift position. This feature is useful when placing a heavy-weight material on the sewing machine.

Even after the presser foot has been lifted with the presser foot lifting lever, the presser foot can be lowered with the presser foot auto lift button.

❶ Lowered position…… Presser foot should be lowered when sewing.

❷ Ordinary lift position…… This position is used for fabric removal and/or changing the presser foot.

❸ Extra lift position……This position is used to put heavy materials underneath the presser foot.

* **Be careful that the presser foot and the needle should not interfere when the needle is in down position and the presser foot is raised to the extra lift position.**

■ Presser foot auto lift button

The presser foot can be lifted/lowered by pressing the presser foot auto lift button. (Refer to page 7)

Operation of the presser foot lifting lever is enabled by lifting the lever to position ❸ once after lifting the presser foot with the presser foot auto lift button.

■ Knee lifting lever

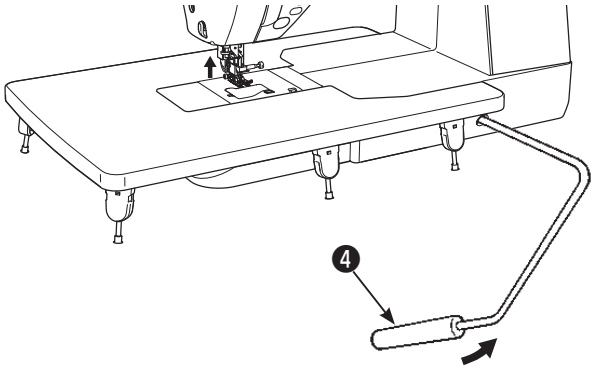

It is possible to lift and lower the presser foot with your knee instead of using your hands.

Push the lever ❹ to right-hand side to lift the presser foot. The presser foot is lowered when the lever goes back to the original position.

Operation of the knee lifter lever is enabled by pressing the lever to the rightmost position after lifting the presser foot with the presser foot auto lift button.

* Do not touch the knee lifting lever while sewing. If you touch the knee lifter lever during sewing, the presser foot will go up causing a deformation in the pattern.

■ Automatic presser foot lifting

Pivot setting

It is possible to set so that the presser foot goes up automatically with the needle kept at the lower position when the sewing machine is stopped.

Presser foot lift after trimming setting

It is possible to set so that the presser foot goes up automatically after thread trimming.

● Automatic lowering of the feed dog when lifting the presser foot

The feed dog comes down automatically when the presser foot is lifted with the presser foot lifting lever or the presser foot auto lift button.
This feature is helpful for placing the material under the presser foot or removing it from there as well as preventing the material from being damaged since the material will not be caught in the feed dog.

* The feed dog does not come down in the case of setting the “presser foot lift after thread trimming”.

4.4. Changing the presser foot

■ Removing and installing the presser foot

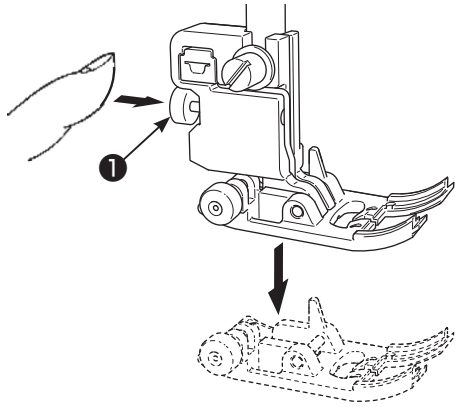

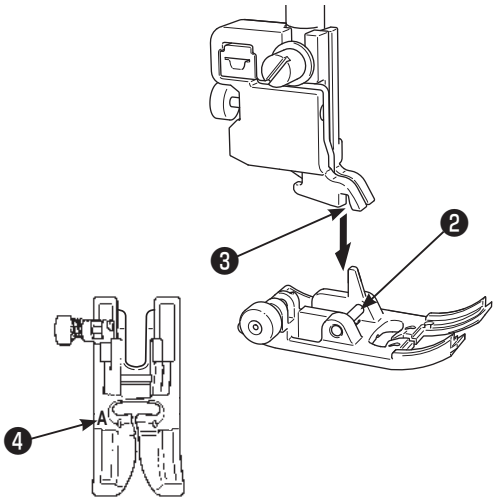

⚠ Leave the machine in Lock mode

● Removing presser foot

Raise the needle.
Move up the presser foot lifting lever.
Press the presser foot releasing button ❶ to remove the presser foot.

● Installing presser foot

Align the pin ❷ of the presser foot and the groove ❸ in the presser foot holder.
Move down the presser foot lifting lever.

* Each presser foot has a marking ❹ . Use the appropriate presser foot for the stitch pattern to be sewn.

■ Removing and installing presser foot holder

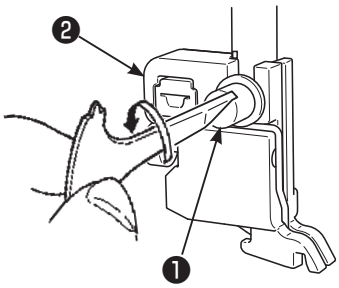

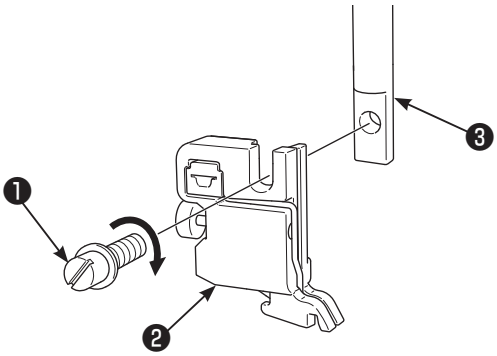

● Removing presser foot holder

Lift the needle and presser foot lifting lever.
Loosen the setscrew ❶ of the presser foot holder to the left and remove the presser foot holder ❷ .

● Installing presser foot holder

Align the screw hole at the presser bar ❸ with the hole of presser foot holder ❷ (long groove).
Tighten the setscrew ❶ firmly by turning it to the right side.

■ The type and application of the presser foot

		Marking of presser foot ↓	
	Standard presser foot	**A**	This is used mainly for straight stitch and zigzag stitches. Use this presser foot especially when sewing heavy-weight materials.
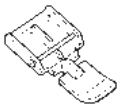	**Zipper presser foot**	**B**	This is used to attach zippers.
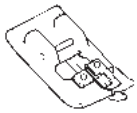	**Overcasting presser foot**	**C**	This presser foot is used exclusively for overcasting to prevent the cut edge of fabrics from fraying.
	Blind stitch presser foot	**D**	This presser foot is used for blind stitch on hems of trousers and skirts, or sleeves.
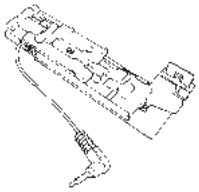	**Buttonhole presser foot**	**E**	This presser foot is used for automatic buttonholing.
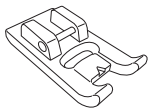	**Manual buttonhole presser foot**	**I**	This is used for sewing decorative stitches, letters and bartacks. Also for manual buttonhole (pattern No.402, No.403).
	Patchwork presser foot	**P**	This presser foot is used for patchwork stitches. There are two seam lines, 1/4-inch and 1/8-inch from center needle position.
	Open toe presser foot	**O**	This is used for the applique and decorative stitches. (Front part of the presser foot is open for better visibility.)
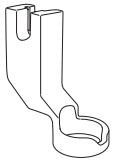	**Quilt presser foot (for the ruler)**	**Q**	This is used for the quilt stitch. (Machine setting: Straight Stitch and Center needle position) The ruler can be used together with the quilt presser foot.
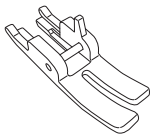	**Straight presser foot**	**S**	Use this presser foot when using the throat plate for straight stitch.
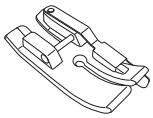	**7mm guide foot or 1/4” guide foot**	**7**	This guide presser foot is provided with a guide for 7-mm or 1/4-inch seam allowance for piecing.

4.5. Placing and releasing “JUKI Smart Feed”

“JUKI Smart Feed” is used when sewing the materials (knit, jersey, vinyl cloth, artificial leather, etc.) that are generally hard to be fed, and the materials (quilt, etc.) that are likely to cause uneven material feed.
“JUKI Smart Feed” can only be used for sewing limited types of patterns.

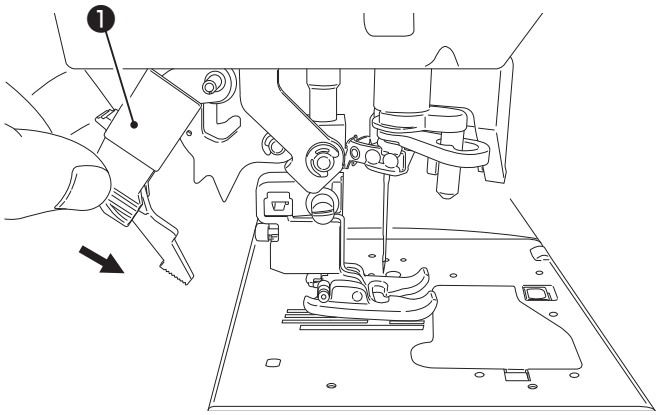

● Placing “JUKI Smart Feed”

Raise the presser foot.
Fully lower “JUKI Smart Feed” ❶ while pinching it with fingers.
When “JUKI Smart Feed” is fitted appropriately, the relevant icon is displayed on the screen.

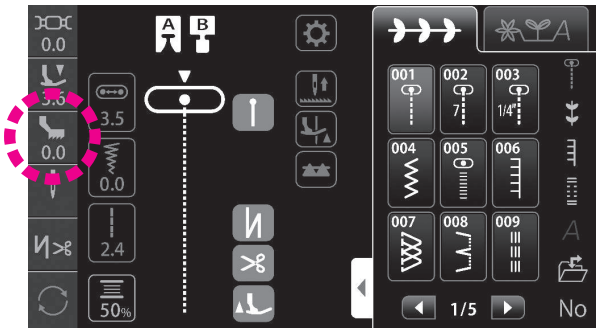

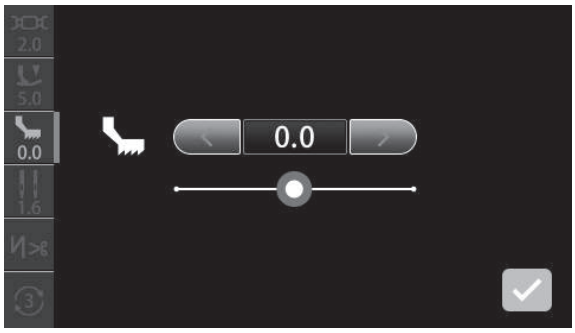

● Adjusting “JUKI Smart Feed”

Press .

Adjust “JUKI Smart Feed” by pressing the icon.
(Setting range: -5.0 - 5.0)

The top feed amount is decreased.

The top feed amount is increased.

The top feed amount can also be adjusted by sliding the slide bar to the right or left.

The top feed amount will be returned to its initial value by pressing the blue frame.

The set value is confirmed by pressing .

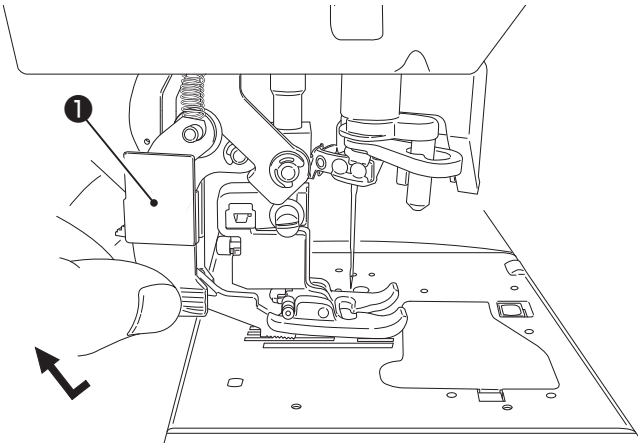

● Releasing “JUKI Smart Feed”

Raise the presser foot.
Pinching “JUKI Smart Feed” ❶ , pull it down and push backward until it is brought to its upper position.

4.6. Changing the throat plate and the feed dog

The normal throat plate and feed dog can be changed to the throat plate and feed dog for straight stitch.
In the case of starting sewing from the edge of material, the material can be smoothly fed without being pulled into the needle hole by changing the throat plate and feed dog to those for straight stitch.

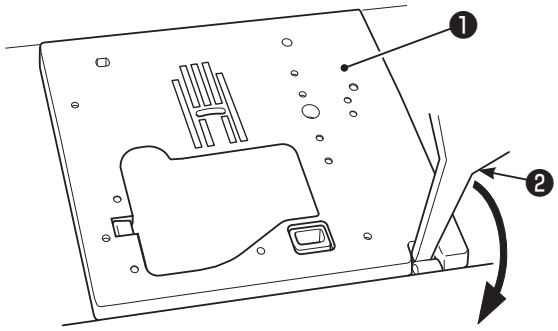

⚠ Turn off the machine or leave the Machine in Lock Mode

● Removing the throat plate

Remove the presser foot and needle.
Push the T-shape screwdriver ❷ into the groove in front of the throat plate ❶ . When pressing the screw-driver downward, throat plate will come off.

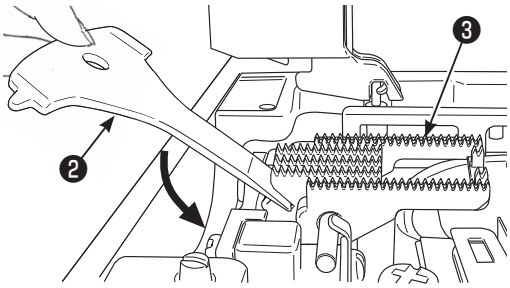

● Removing the feed dog

Push the T-shape screwdriver ❷ into the groove in the back of the feed dog ❸ . When pressing the screw-driver downward, feed dog will come off.

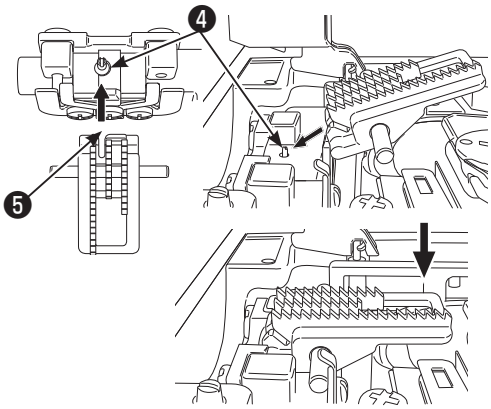

● Attaching the feed dog

Follow the angle in the sketch and place the feed dog so that the pins ❹ of the feed dog meet the groove ❺ in the back of feed dog.
Press down the front part of feed dog and engage the feed dog.

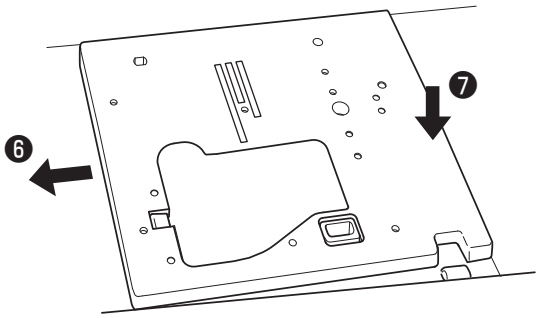

● Attaching the throat plate

Place the area (❻) first and then push center to right hand part of the throat plate to assemble (❼).

● Patterns that can be sewn with the throat plate for straight stitch

001	009	011	391	392	393

Once the throat plate and feed dog for straight stitch are installed, the limited types of patterns that can be sewn with them can be selected.

4.7. How to use the throat plate for straight stitch

The throat plate is provided with a useful guide for you to determine the sewing position of material.

Standard throat plate

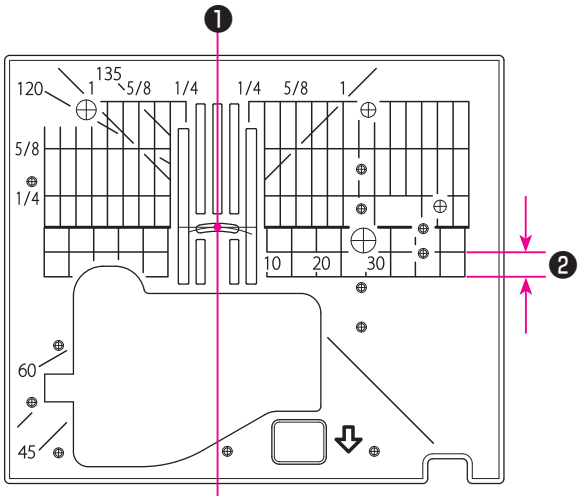

Throat plate for straight stitches

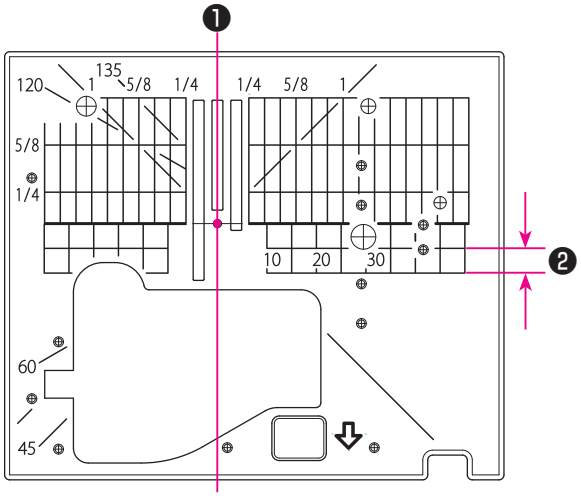

● Guide lines

It is possible to sew the material from its edge by sewing the material while aligning its edge with the guide line on the throat plate.

❶ On center needle position basis
❷ 5 mm

* Numbers on the guide line show the distance in mm and inches between the center needle position and the guide line.

Numbers, 7, 10 and 20 are millimeter.
Numbers, 1/ 4, 5/ 8 and 1 are inches.

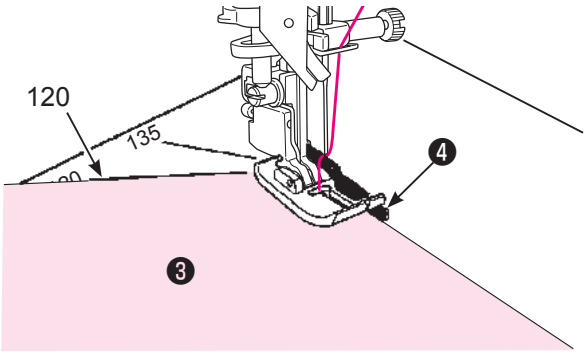

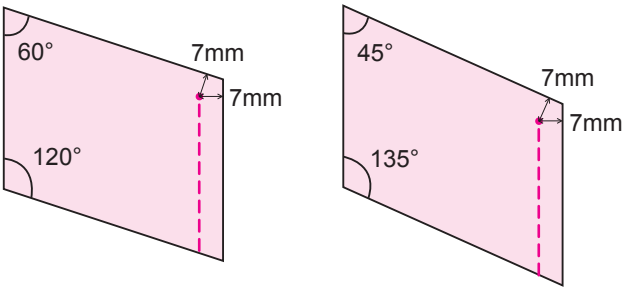

● Angle index

The angle index is useful when using it for piecing of patchworks.
If you align the material edge with the angle index which is same of the angle of patchwork (piece) corner ❸ , you will know the start and end positions while setting the seam allowance to 7 mm without marking the material.

❹ Guide

4.8. Attaching the needle

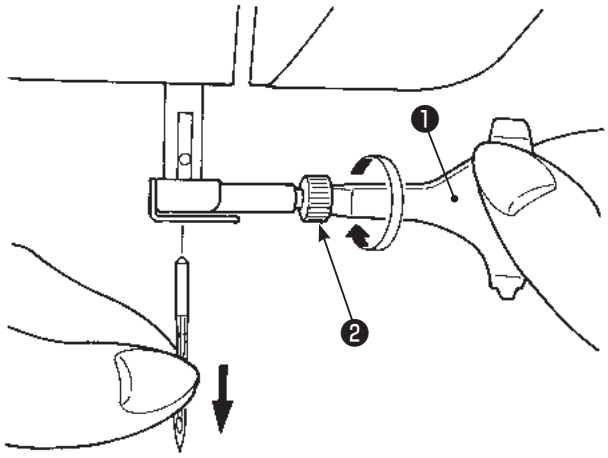

⚠ Turn off the machine or leave the Machine in Lock Mode

● Removing needle

Turn the hand wheel towards you until the needle comes to the highest position and lower the presser foot.
Turn the needle setscrew ❷ towards you 1-2 times and remove the needle.

❶ T-shape screwdriver

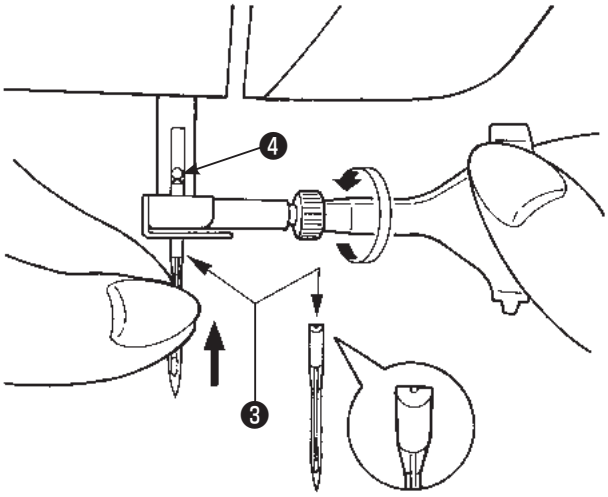

● Attaching the needle

Hold the needle with its flat part facing away from you (❸), and insert it fully until it touches the stopper pin ❹.
Securely tighten the needle setscrew.
The needle cannot be inserted unless it is correctly positioned.

● Needles to be purchased

When purchasing spare needles, specify HA×1 (130/705H) or HA×1 SP (needle for knits) .

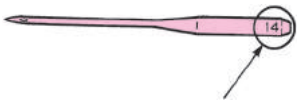

Needle size:

The larger the number, the thicker the needle.

● Checking the needle

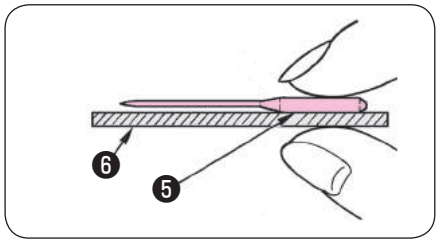

Check the needle for its straightness occasionally.
Any bent needle would cause skipped stitches, thread breakage or damage to materials.

❺ The flat part of the needle
❻ Flat object

⚠ Attention: **If the needle is not properly installed or a bent needle is used, needle breakage can be caused. It will cause damage to the machine.**

4.9. Fabric, thread and needle table

	Fabric	Thread	Needle
			HA×1
Light-weight materials	Lawn	Silk thread ..... No.80,90 Spun thread No.80,90	No.11
	Georgette		
	Tricot	Spun thread No.60-90	Knit needle No.11
	Wool and synthetic fabrics	Silk thread ..... No.80 Spun thread No.60-90	No.11-14
Medium-weight materials	Cotton and synthetic fabrics	Spun thread No.50, 60	No.11-14
	Light jersey	Silk thread ..... No.50 Spun thread No.50, 60	Knit needle No.11
	Ordinary wool and synthetic fabrics	Silk thread ..... No.50 Spun thread No.50, 60	No.11-14
Heavy-weight materials	Denim	Spun thread No.30-50	No.14-16
	Jersey	Silk thread ..... No.50 Spun thread No.50, 60	Knit needle No.11-14
	Coat	Silk thread No.50	No.11-14

* In general, the same thread is used for both needle and bobbin threads.
* Thin thread and needle will be used for light-weight fabrics and thick thread and needle will be used for heavy-weight materials.
* Check that the combination of needle and thread is OK by trial sewing on the material which will be sewn.
* Knit needle is good for stretchy fabrics (such as knits) and synthetic fabrics.
* Use thread No. 30 - 90.
* When it is difficult to go over an overlapped section, guide the fabric by hand.
* When sewing “quilt patterns”, “decorative patterns” or “letters”, better finish will be ensured by using a knit needle.

4.10. Bobbin thread preparation

■ Winding a bobbin

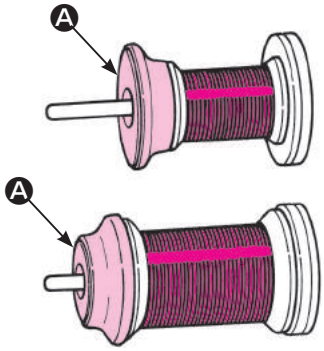

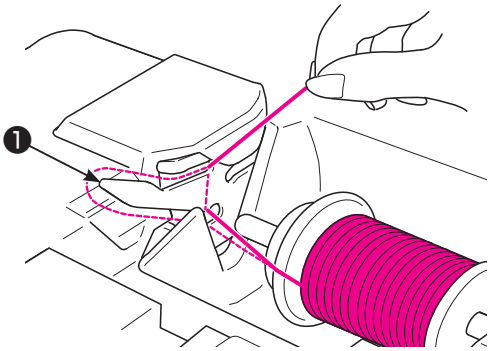

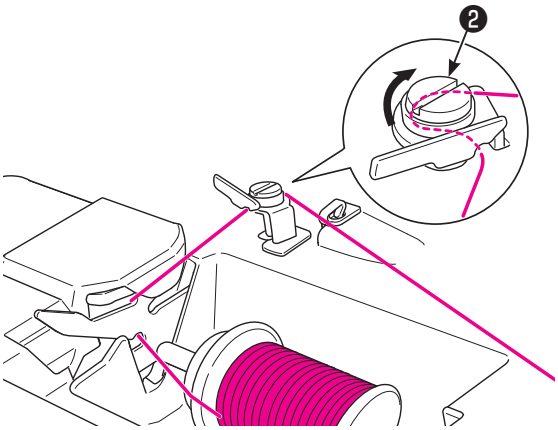

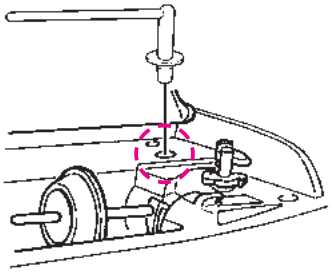

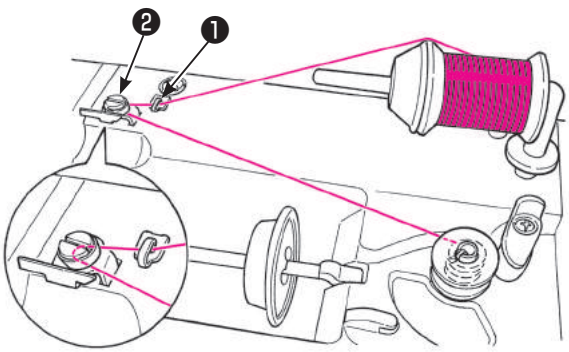

⚠ Turn off the machine

● In the case of using the spool pin

1 **Place the thread spool to the spool pin.**

There are three types of the spool caps Ⓐ, large, medium and small.
Select the size of spool cap according to the thread spool to be used and use it while changing its direction appropriately.

*** Be aware that a spool with a small remaining amount of thread can cause tangling or slip-off of thread.**

2 **Thread the guide ❶ .**

3 **Thread the thread guide ❷ (guide in the circle) .**
Pull the thread by both hands and thread it to bobbin winding thread guide.

● In the case of using the auxiliary spool pin

1 **Place the auxiliary spool pin.**

2 **Place the thread spool to the auxiliary spool pin.**

3 **Pass the thread through thread guide ❶ . Then, pass the thread through thread guide for bobbin winding ❷ .**
Pull the thread by both hands and thread it to bobbin winding thread guide.

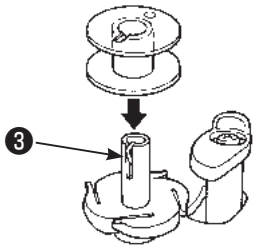

4 **Set the bobbin on the bobbin winding shaft ❸ .**

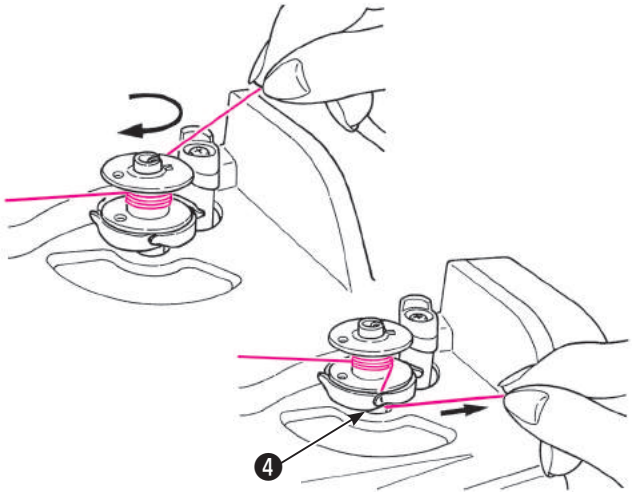

5 **Pay attention that the thread from bobbin winding thread guide is not loose and wind the thread to the bobbin 4-5 times in clockwise direction.**

Put the thread end into the guide ❹ at the bobbin winding shaft and pull it to the right side to cut it.

6 **Turn the power ON.**

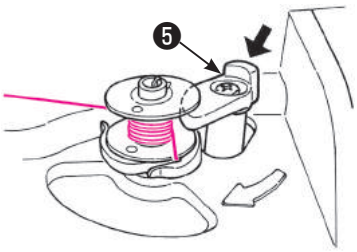

7 **Push the bobbin winding regulator ❺ towards the bobbin to start winding the bobbin.**

* **Be careful that the bobbin winding regulator works as a switch.**

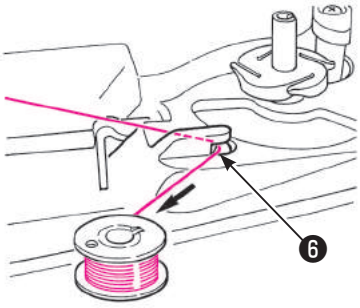

8 **When winding is finished, the shaft stops automatically, the bobbin winding regulator moves to right and return to the original position.**
Remove the bobbin from the bobbin winding shaft and cut the thread by cutter ❻ .

* **Bobbin winding will automatically stop even while winding, when the winding speed is reduced due to a load to the bobbin winding motor caused by thread tangling.**

■ Placing the bobbin

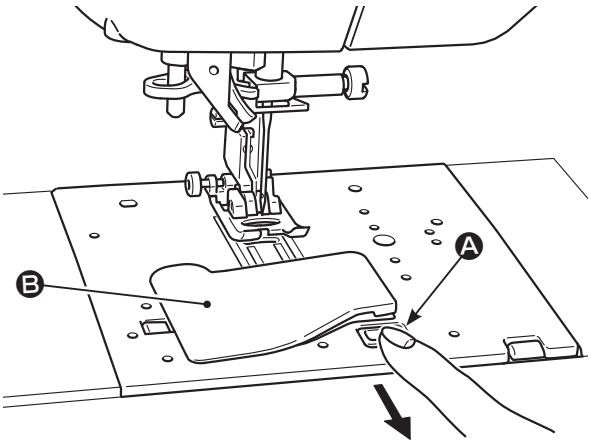

⚠ Turn off the machine

1 **Pull forward hook cover release button Ⓐ and open the hook cover Ⓑ.**

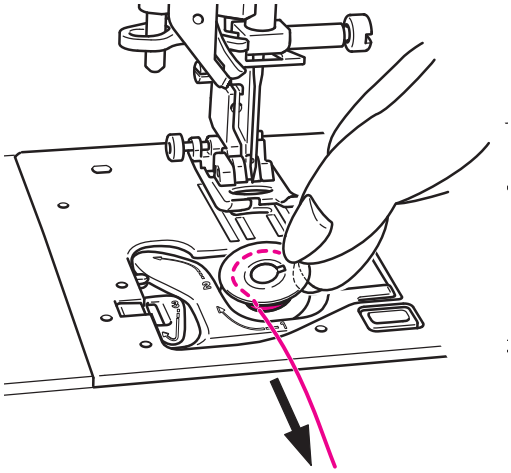

2 **Put the bobbin in the bobbin case.**

* **Place the bobbin so that thread winds counter-clockwise.**

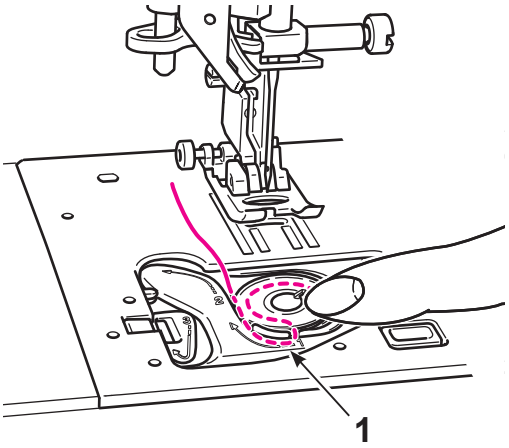

3 **Thread groove and 1 by pulling the thread end.**

* **It will be easier to thread grooves when you press the bobbin lightly with your finger.**

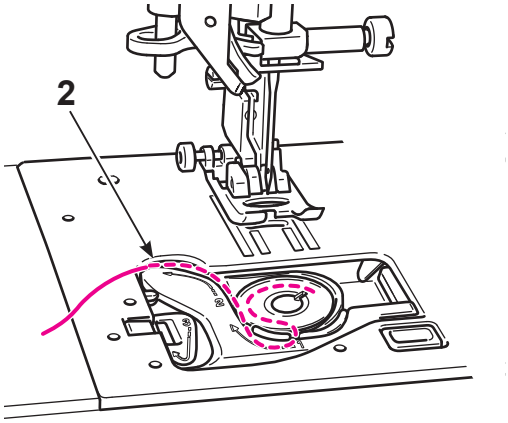

4 **Thread guide 2 by pulling the thread to left side.**

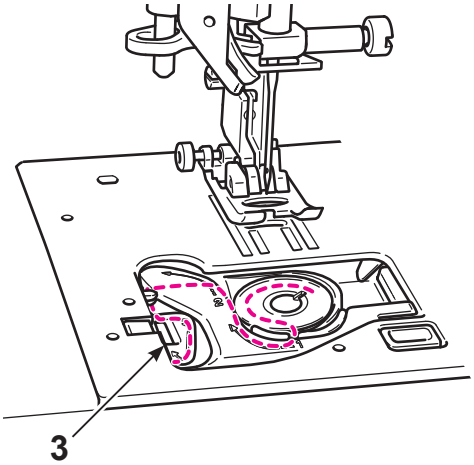

5 Thread 3 .

* When pulling bobbin thread, bobbin rotates counterclockwise. If bobbin rotates clockwise, put the bobbin upside down.

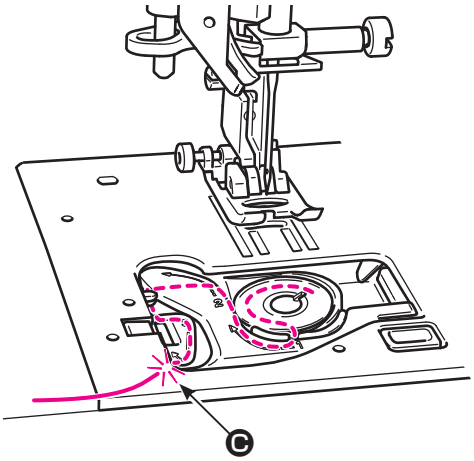

6 Cut the thread with the built-in cutter C.

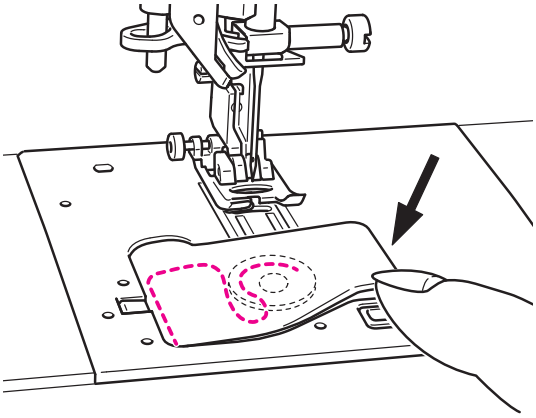

7 Close the hook cover.

You can start to sew in this condition (without pulling up the bobbin thread), however, if you want to sew with the bobbin thread pulled out, refer to “Pulling up the bobbin thread” in the page 35.

4.11. Needle thread preparation

■ Preparation

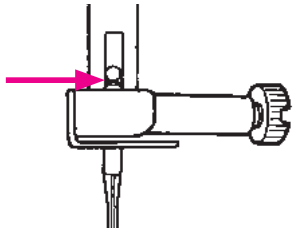

1 **Make sure to push the needle to the top.**

If the needle is not attached appropriately, the needle cannot be threaded with the automatic needle threader.

*** Use the needle: No.11-16 and the thread: No.30-90.**

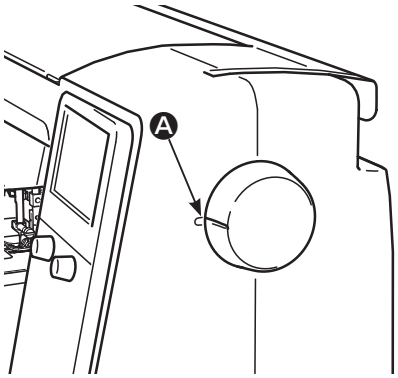

2 **Align the marking Ⓐ at the hand wheel with the one on the machine body.**

3 **Turn the power ON.**

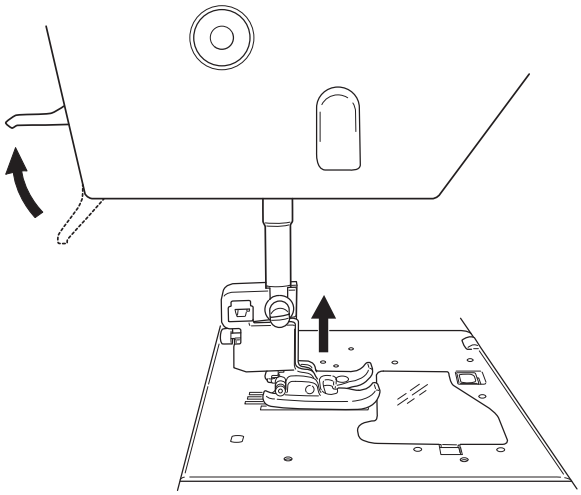

4 **Lift the presser foot.**

*** You can thread the machine correctly on condition that the machine is turned on and presser foot is up position.**

5 **Press the lock key to activate the lock mode.**

■ Threading the needle thread

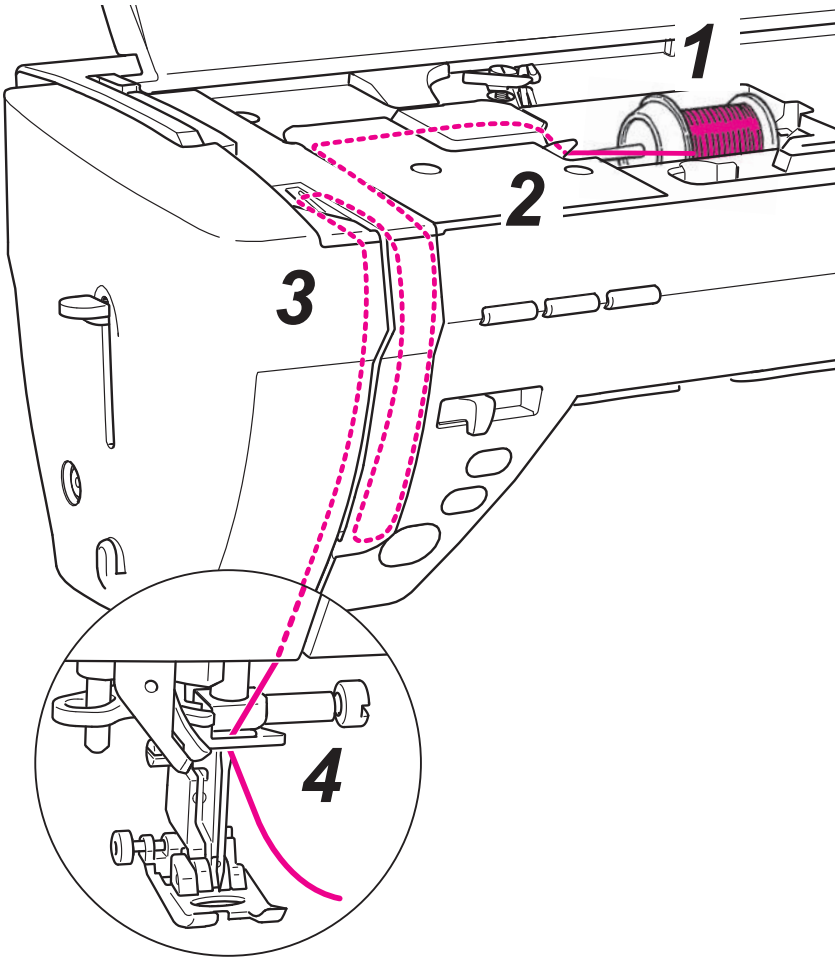

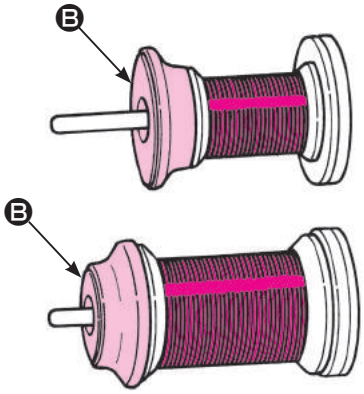

1 Place the thread spool to the spool pin.

There are three types of the spool caps Ⓑ, large, medium and small.
Select the size of spool cap according to the thread spool to be used and use it while changing its direction appropriately.

* **Be aware that a spool with a small remaining amount of thread can cause tangling or slip-off of thread.**

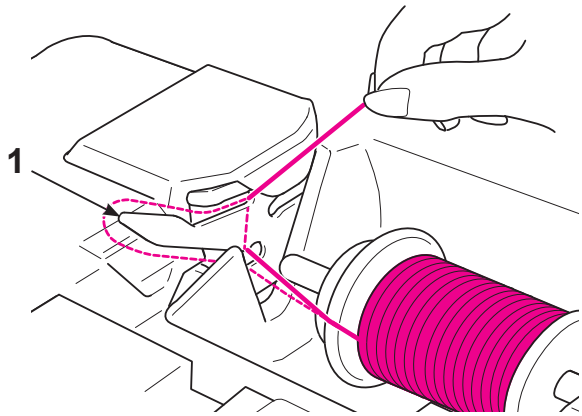

2 Thread to guide 1.

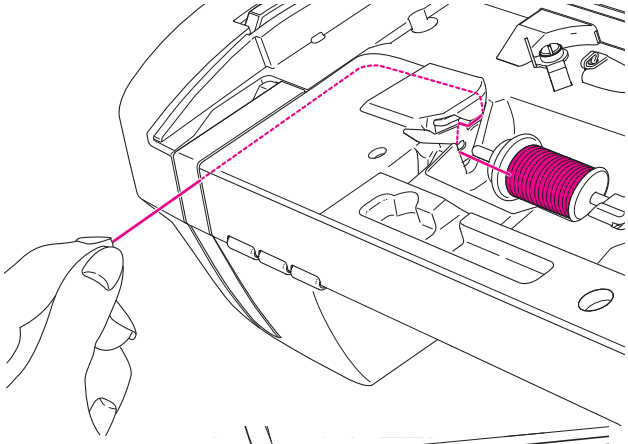

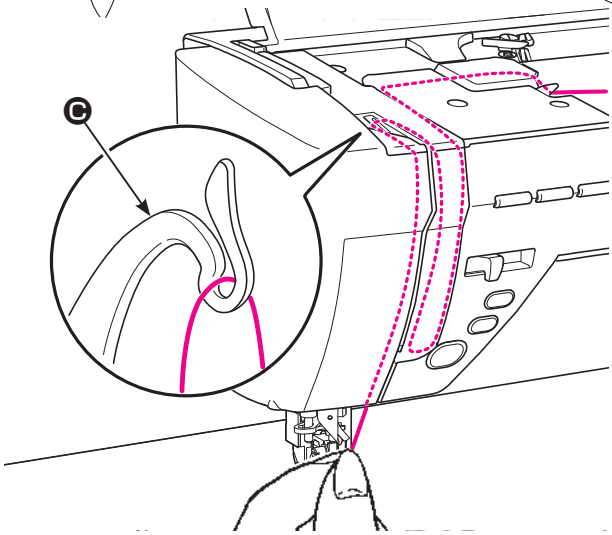

3 Hold the thread end and thread according to the arrow marking.

* Check that the thread take-up C is correctly threaded.

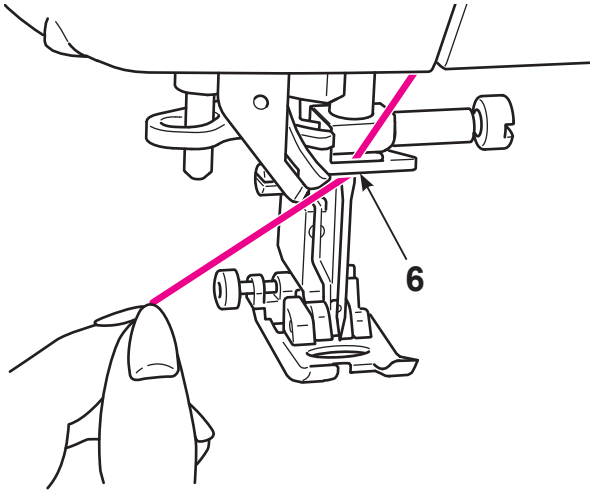

4 Thread the guide 6 from the right-hand side.

Draw the needle thread out from the guide by approximately 10 cm.

■ Automatic needle threader

* When twin needle is used, the automatic needle threader can not be used.
* Use the needle: No.11-16 and the thread: No.30-90.

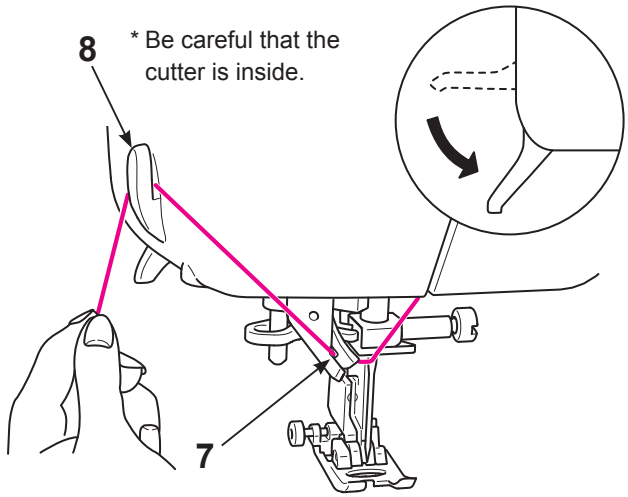

1 Lower the presser foot with the presser foot lifting lever.

* The automatic needle threader sometimes fails to thread the needle when the presser foot is raised.

2 Thread to 7 and cut the thread with the thread cutter 8.

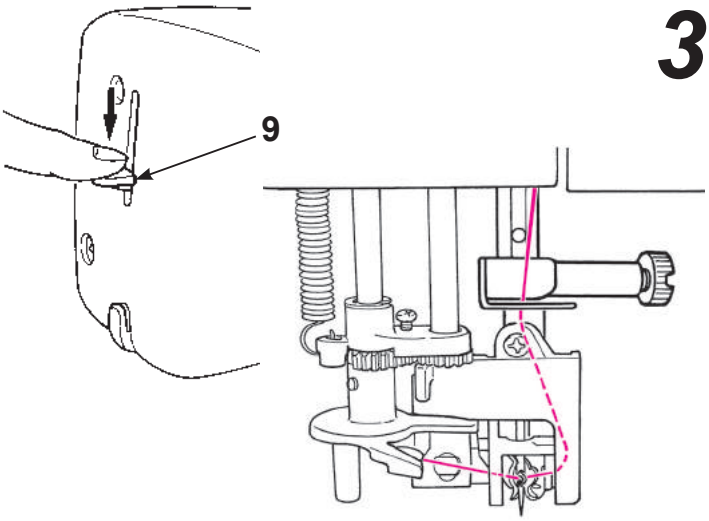

3 Lower the threading lever 9 until it comes to a complete stop.

* Lower the threading lever slowly.

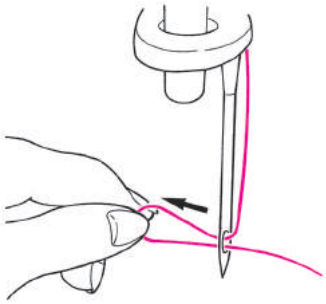

4 Release the threading lever and the needle thread is threaded to the needle eye.

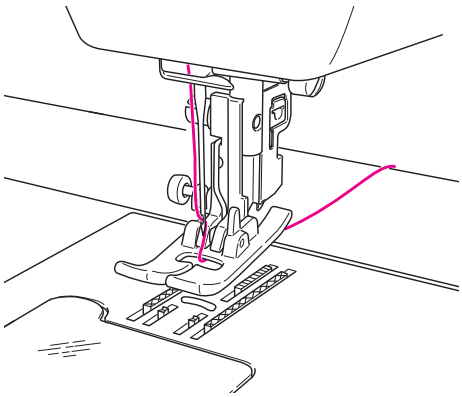

5 Lift the presser foot. Then, draw the needle thread backward.
Pull out the thread from the needle eye by approx.10 cm or 4 inches long.

■ Pulling up the bobbin thread

Basic operation:
You can start to sew without pulling up the bobbin thread, however, if you want to sew with the bobbin thread pulled out, follow the directions below.

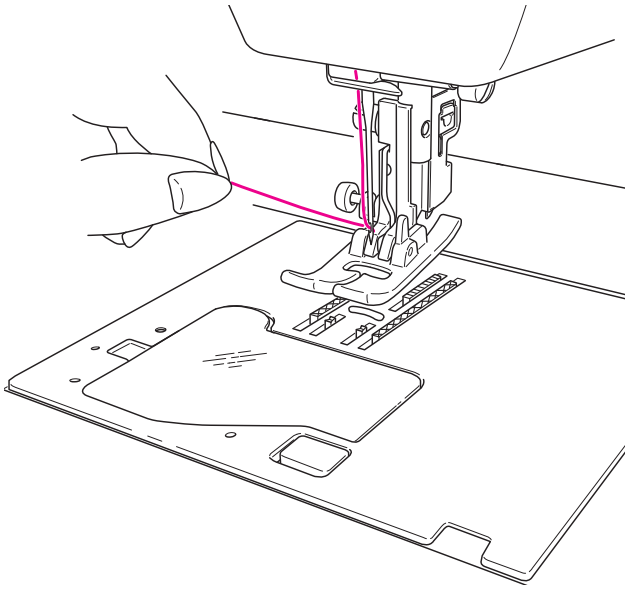

1 **Lift the presser foot and lightly hold the end of the needle thread.**

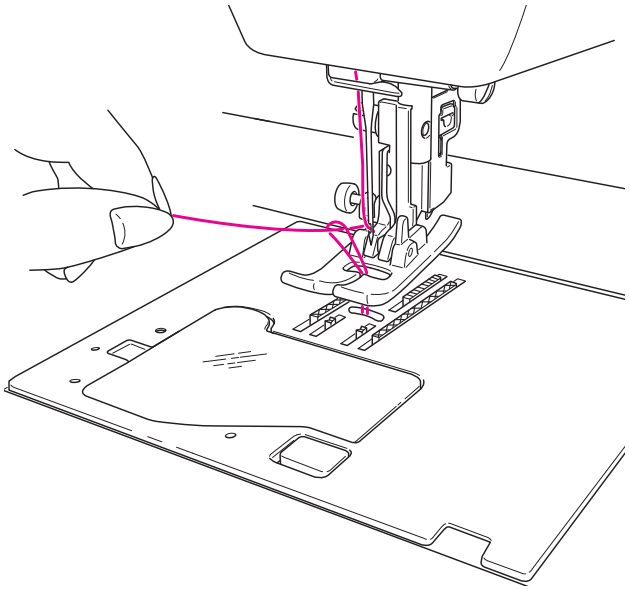

2 **Turn the hand wheel towards you to move the needle up and down. Loop of bobbin thread will be pulled out when you will pull the needle thread lightly.**

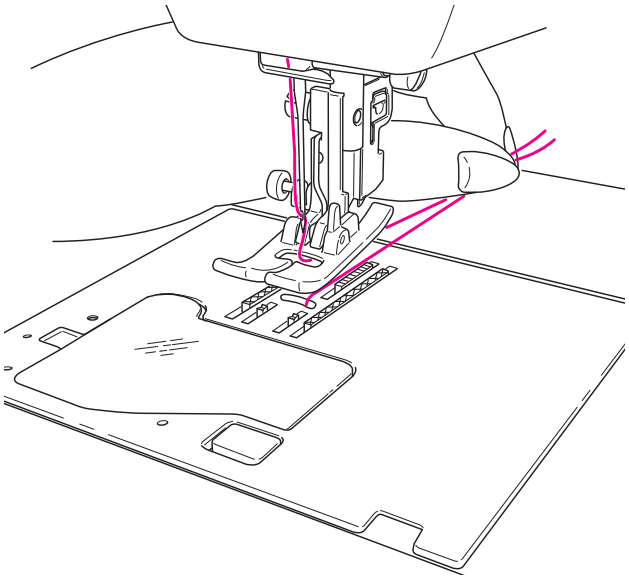

3 **Pull out both needle and bobbin threads by approx. 10 cm (4 inches) long and pass them under the presser foot towards the back of the machine.**

4.12. How to adjust thread tension

If the thread tension is not adjusted correctly, seam balance will be lost resulting in puckering or thread breakage. Default setting is suitable for most fabrics. Adjustment may be necessary according to fabrics and sewing applications.

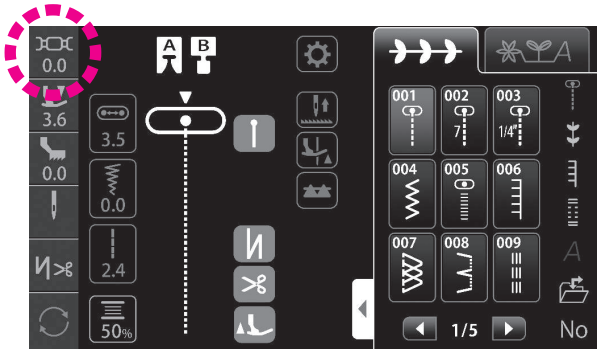

Press .

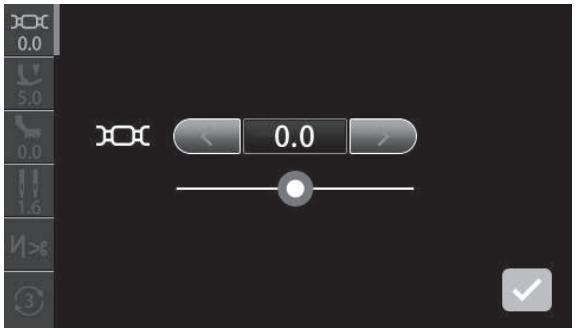

Adjust the thread tension by pressing the icon.
(Setting range: -5.0 - 5.0)

The needle thread tension is decreased.

The needle thread tension is increased.

The needle thread tension can also be adjusted by sliding the slide bar to the right or left.

The needle thread tension will be returned to its initial value by pressing the blue frame.

The set value is confirmed by pressing .

* **If a new pattern is selected, the set value will be returned to the initial value.**

■ Well-balanced thread tension

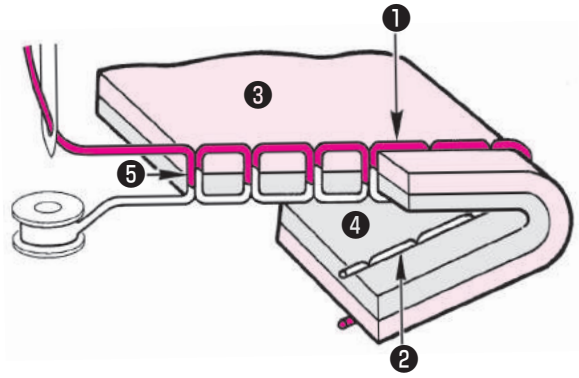

<In the case of straight stitch>

The needle thread and the bobbin thread interlace with each other approximately at the middle of material thickness.

❶ Needle thread
❷ Bobbin thread
❸ Fabric (right side)
❹ Fabric (wrong side)
❺ Middle of the fabric thickness

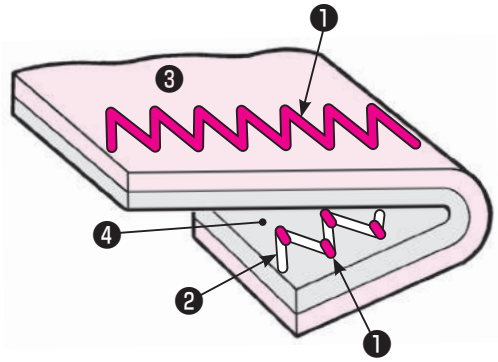

<In the case of zigzag stitch>

The needle thread is pulled a little bit to the wrong side of material.

■ When the needle thread is too strong

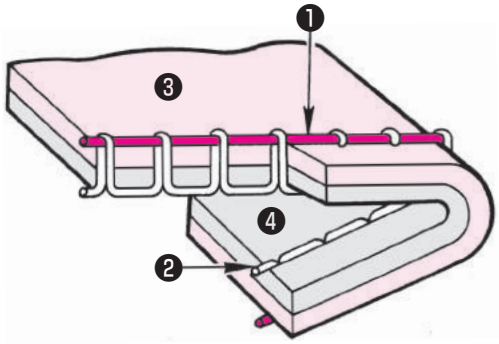

The bobbin thread will be pulled to the front side of the fabric.

< Turn the thread tension adjustment button towards “-1” to “-5”.

■ When the needle thread is too low

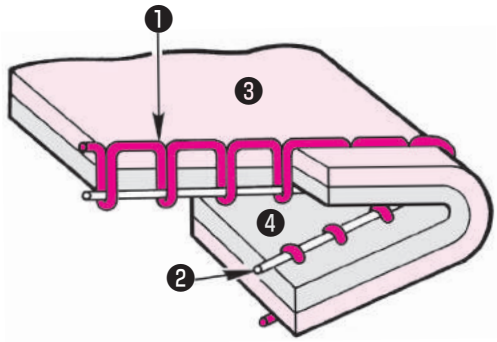

The needle thread will be pulled to the wrong side of fabric.

> Turn the thread tension adjustment button towards “+1” to “+5”.

4.13. Setting the presser foot pressure

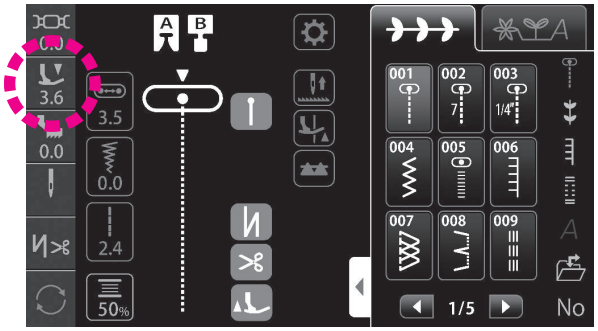

Press .

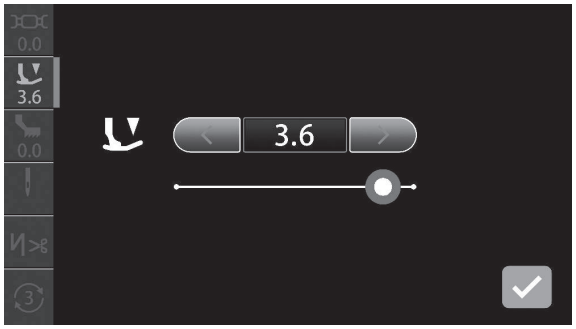

Set the presser foot pressure by pressing the icon.
(Setting range: 0 - 5)

Set the presser foot pressure to “3.6” (initial value) in the case of standard stitching.
Set the presser foot pressure to a smaller value (decrease the presser foot pressure) in the case of sewing light-weight synthetic materials or elastic materials, and sewing appli-que, quilt and curve sections of materials, since in that case uneven material feed is likely to occur.

The presser foot pressure is decreased.

The presser foot pressure is increased.

The presser foot pressure will be returned to its initial value by pressing the blue frame.

The presser foot pressure can also be adjusted by sliding the slide bar to the right or left.

The set value is confirmed by pressing .

4.14. Setting the micro-lifter

It is possible to sew the material with the presser foot slightly lifted according to the material thickness.
The micro-lifter function is used for sewing materials such as quilt and velvet that are likely to cause uneven material feed.

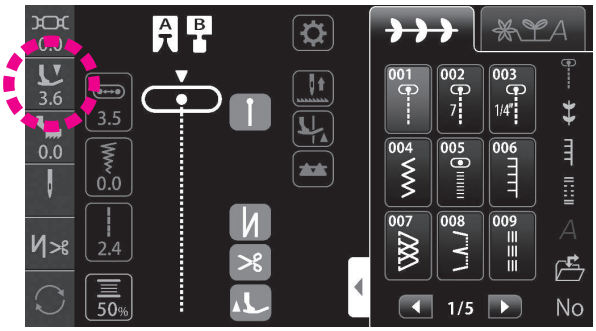

Press .

Adjust the presser foot height on the “presser foot presser setting screen”.

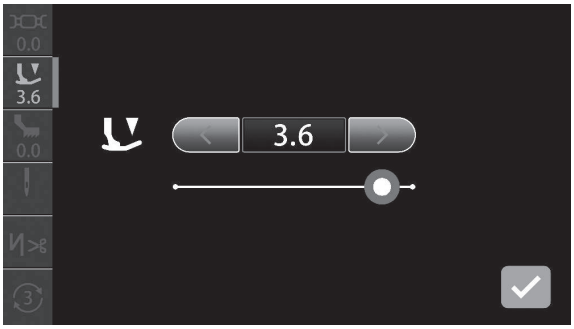

Set the presser foot height to be employed by the micro-lifter function by pressing the icon.
(Setting range: -2.5 - 0)

In the case it is not necessary to slightly lift the presser foot during sewing, set the presser foot height for the micro-lifter function to “0”.
Adjust the presser foot to the height at which the presser foot appropriately clamp the material by pressing .
The larger the negative set value becomes, the higher the presser foot can be lifted.

Place the material (for trial stitching) that is the same with the material to be actually sewn. Then, adjust the presser foot height and carry out trial stitching.
Be aware, if the presser foot is lifted excessively during sewing, the material cannot be fed resulting in thread entanglement.

The set value is confirmed by pressing .

4.15. Twin needle sewing

Pattern No.	Presser foot
001, 004, 005, 009~016, 018, 020, 271~273, 280, 281, 286~288	Standard presser foot (A) Manual buttonhole presser foot (I)

⚠ Attention	**When you want to change the needle or the presser foot, be sure to turn the power OFF or place the sewing machine under the lock mode in advance.**

By using two needles beautiful decorative stitches can be sewn.

■ Changing the needle

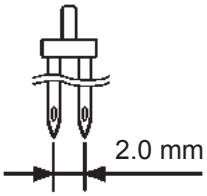

1 Change the needle to the twin needle.

Make sure to use a twin needle with size of 2.0 mm.
* The twin needle is separately available.

■ How to thread the needles

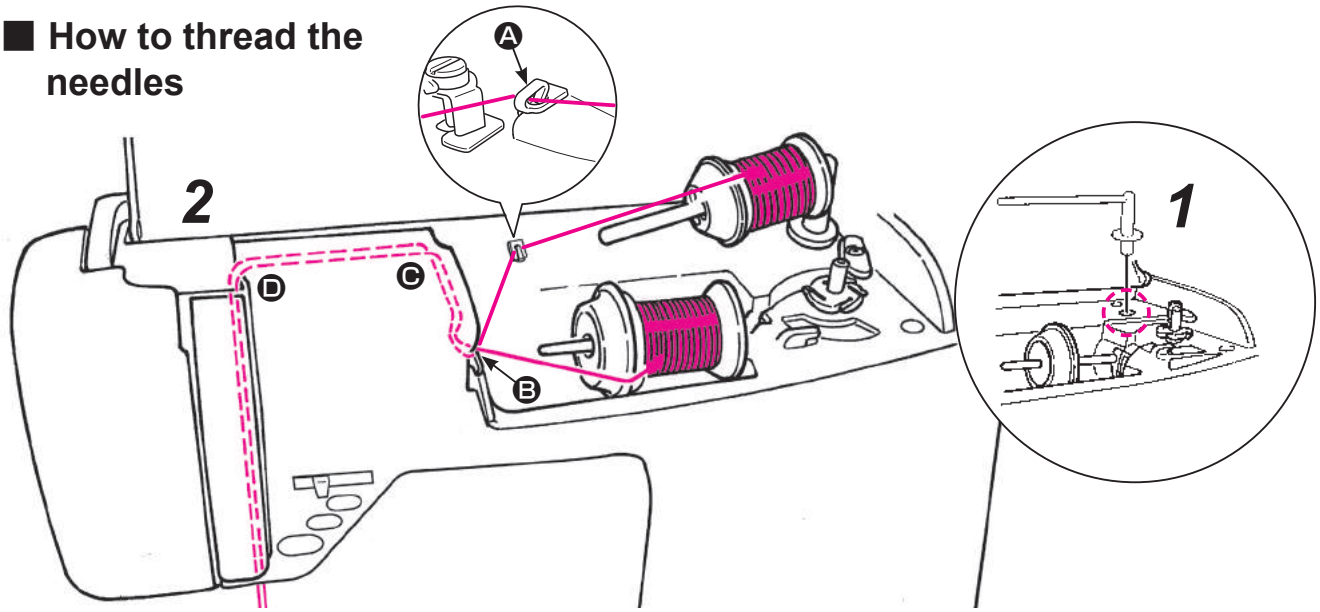

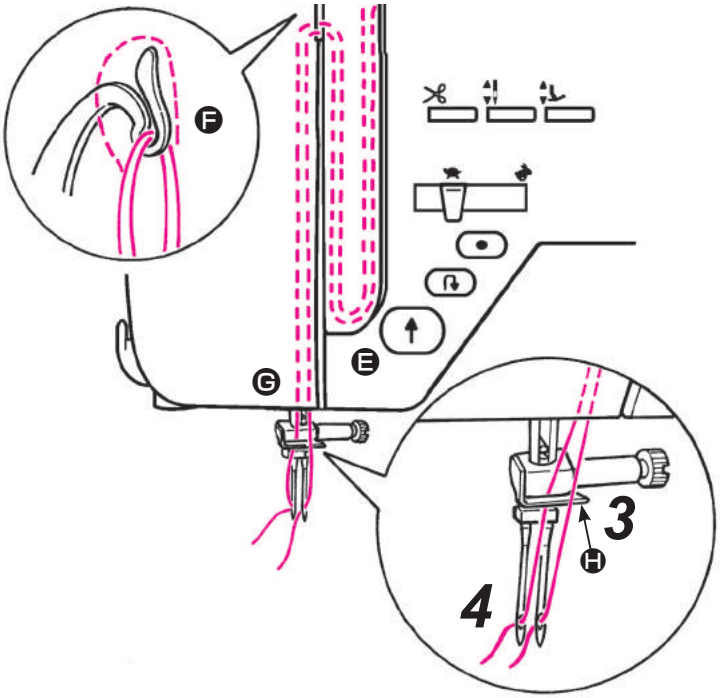

1 Place the supplementary spool pin.

2 Thread to the thread guide Ⓐ first. After that, thread paths are same up from Ⓑ to Ⓖ.
* When twin needle sewing, make sure to use thread size smaller than No. 60.

3 Do not thread Ⓗ for right-hand needle.

4 Thread to right-hand and left-hand needles separately.
* Automatic needle threader can not be used. Thread each needle manually.
* Automatic thread trimmer can not be used in case of twin needle sewing.

Setting of twin needle sewing

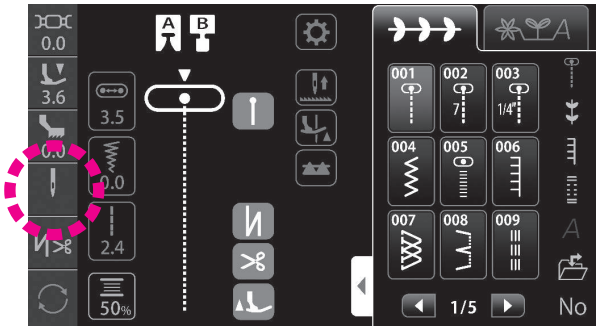

Caution:
When carrying out the twin needle stitching, it is necessary to set the twin needle before selecting a pattern.

Press .

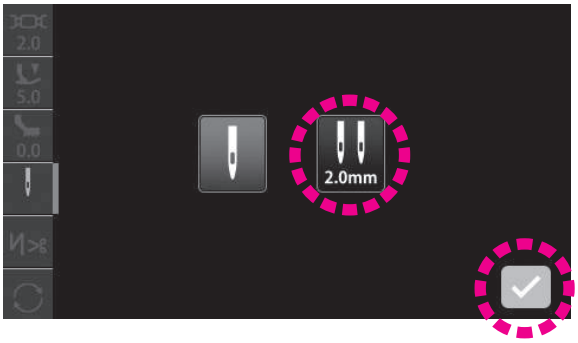

Press 2.0mm.

Press .

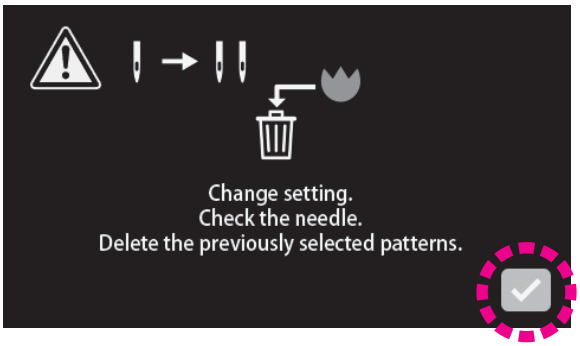

The set value is confirmed by pressing .

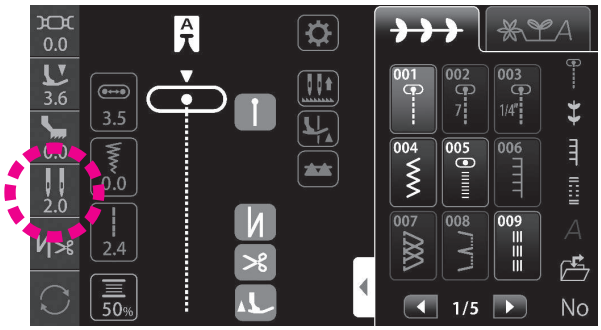

Twin needle is set.

In the case the twin needle is set, the zigzag width will be limited to 5 mm at the maximum.

Relation between the needle and the stitch

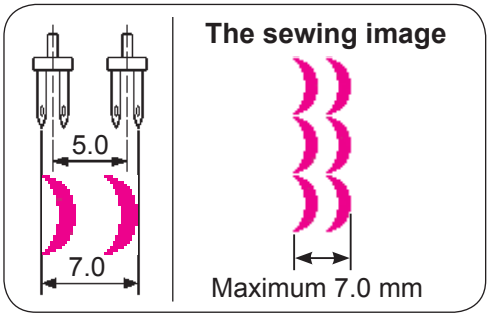

* The sewing speed is slightly decreased.
* In this case, patterns that are stored in memory cannot be sewn.
* The automatic thread trimmer does not operate.

Selecting the pattern that is suitable for the twin needle sewing

In the case the twin needle is set, the patterns that can be sewn with the twin needle will be displayed.

001	004	005	009	010	011	012	013	014	015	016

018	020	271	272	273	280	281	286	287	288

4.16. Setting the automatic back tacking, thread trimming and presser foot lifting

The back tacking at the beginning and end of sewing and the back tacking and thread trimming / presser foot lift after thread trimming at the end of sewing can be set.

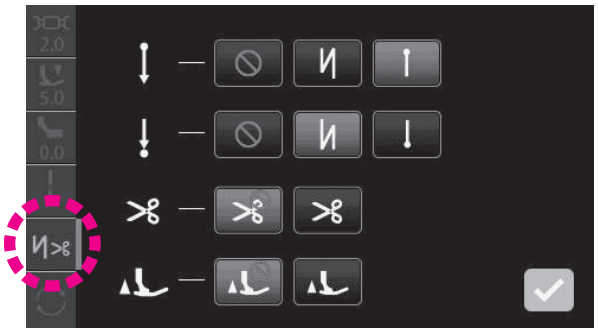

Carry out basic setting of operations by pressing .

The set value is confirmed by pressing .

	Setting for the back tacking at the beginning of sewing Select one from the three types of back tacking. : OFF : Reverse stitch : Lock stitch
	Setting for the back tacking at the end of sewing Select one from the three types of back tacking. : OFF : Reverse stitch : Lock stitch

	Back tacking and thread trimming : OFF Thread trimming is not carried out : ON Thread trimming is carried out
	Presser foot lift after thread trimming : OFF The presser foot is not lifted after thread trimming : ON The presser foot is lifted after thread trimming

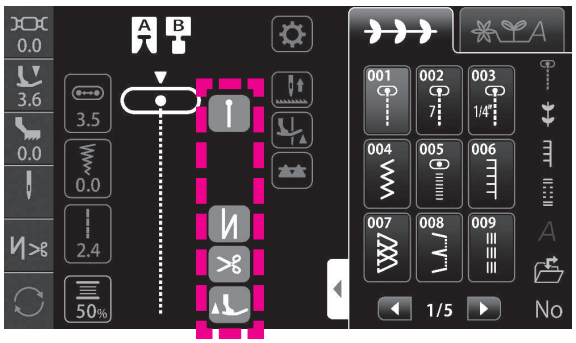

● Display on the touch panel

	ON	OFF
Back tacking at the beginning of sewing		
Back tacking at the end of sewing		
Back tacking and thread trimming		
Presser foot lift after thread trimming		

* **If a decorative pattern, etc. is set when the back tacking at the beginning and end of sewing is selected, reverse stitch will be changed over to back tacking.**

● Operation during sewing

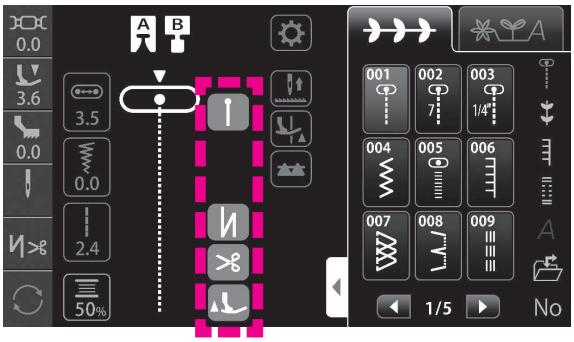

1 Selecting a pattern.

2 Check the setting displayed on the screen.

* **In the case of selecting a decorative pattern, back tacking will be carried out even if** **is displayed on the screen.**

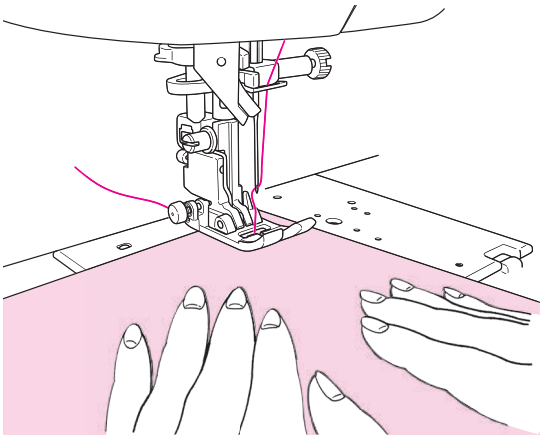

3 Sewing start

Place the material at the sewing start position and begin sewing.
In the case the back tacking at the beginning of sewing is selected, the reverse stitch button and back tacking button will not operate.

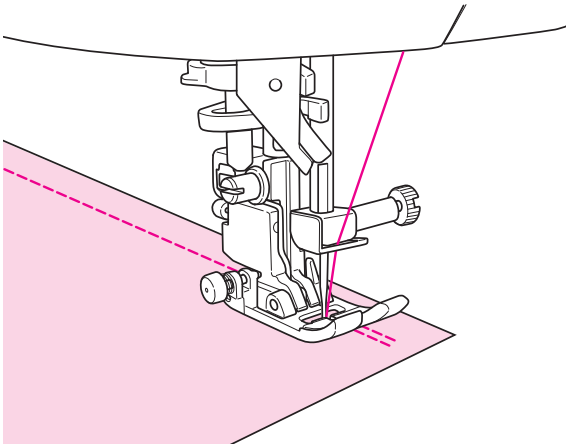

4 Sewing end

Press the button which corresponds to the type of back tacking you have selected.
(/)
Even if you press the button that does not correspond to the type of back tacking you have selected, the back tacking you have selected will be carried out.

4.17. Needle positions / Zigzag width / Stitch length

■ When changing the needle position

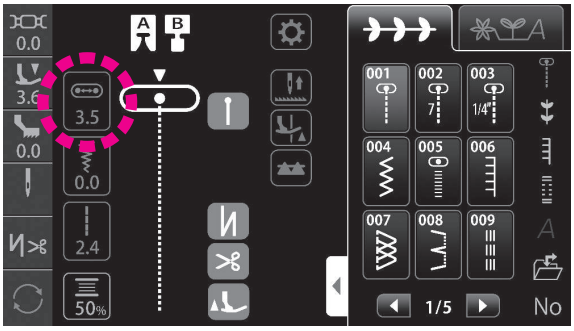

Adjusting dial (left)

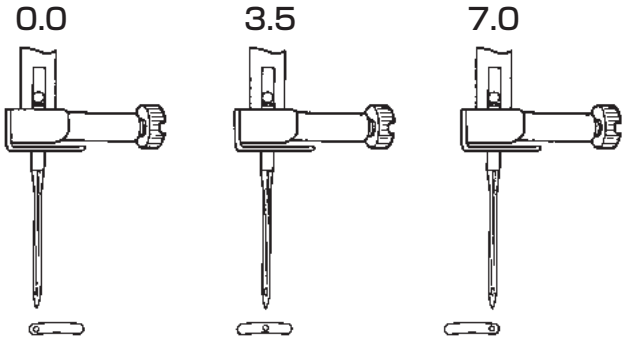

① Press .

The adjustment item of the adjusting dial (left) will be the “needle position”.

② Change the needle position with the adjusting dial (left).
Turning to the left, the needle moves to the left.
Turning to the right, the needle moves to the right.

The leftmost end represents “0.0” The rightmost end represents “7.0”.

The needle position is represented by ▼ of .

Numeric values displayed on the screen: In mm

■ When changing the zigzag width

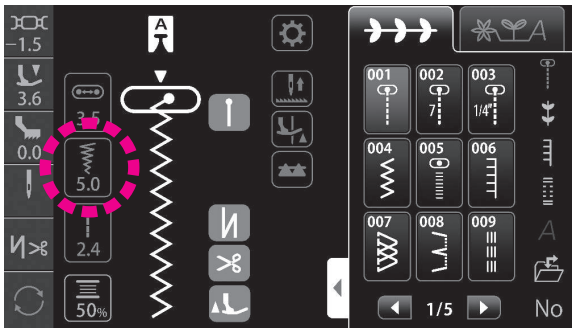

Adjusting dial (left)

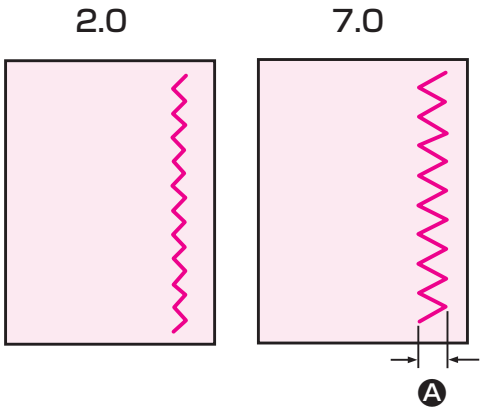

① Press .

The adjustment item of the adjusting dial (left) will be the “zigzag width”.

② Change the zigzag width Ⓐ with the adjusting dial (left).
The displayed numeric value is decreased and the zigzag width is decreased by turning the dial counterclockwise.
The displayed numeric value is increased and the zigzag width is increased by turning the dial clockwise.
The zigzag width can be adjusted while sewing.

Numeric values displayed on the screen: Measure of the zigzag width (In mm)

■ When changing the stitch length

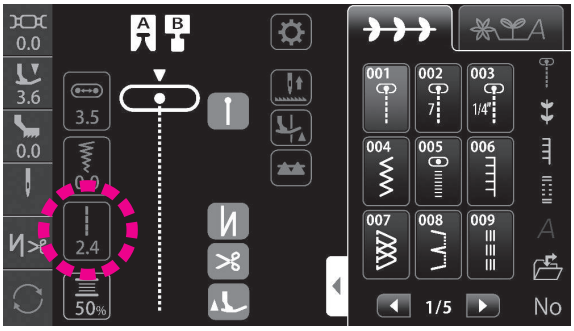

Adjusting dial (right)

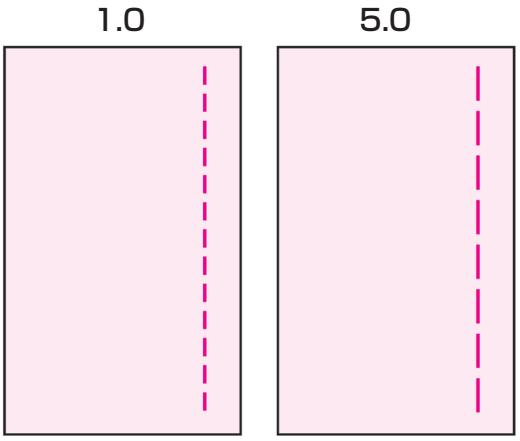

Change the stitch length with the adjusting dial (right). The displayed numeric value is decreased and the stitch length is decreased by turning the dial counterclockwise. The displayed numeric value is increased and the stitch length is increased by turning the dial clockwise.

Numeric values displayed on the screen: Measure of the stitch length (In mm)

4.18. Bobbin thread counter

Details of the bobbin thread counter can be set.

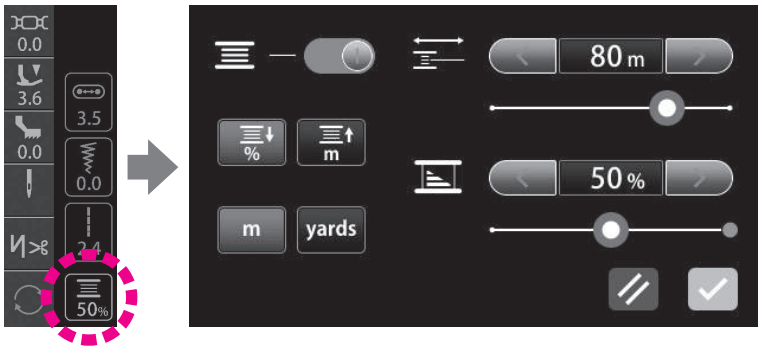

: Bobbin thread counter ON

: Bobbin thread counter OFF

: Display of the used amount

: Display of the measured amount

: Display in meters

: Display in yards

: Return to the initial value

: Confirm the setting

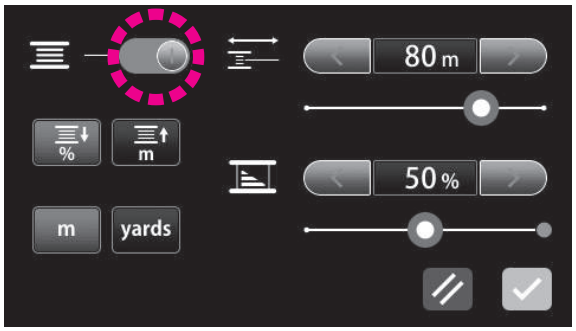

The bobbin counter has been factory-set to OFF at the time of shipment.

Turn ON the bobbin counter with when you want to use it.

■ How to display the used amount

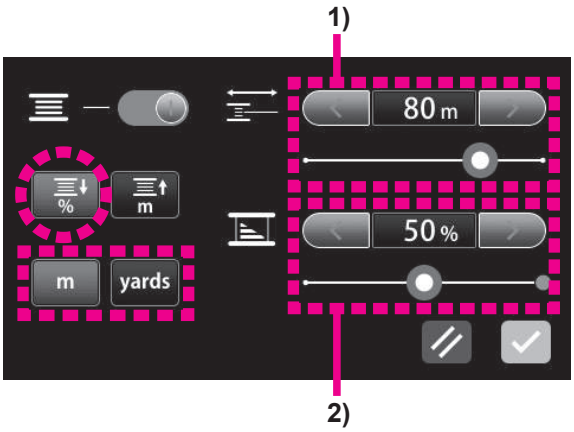

Press to activate the used amount display.

Set the unit of the used amount by pressing .

1) Inputting the bobbin winding amount

- **In the case of inputting the measure of the amount of thread to be wound on a bobbin**

  Find the measure of the amount of thread to be wound on a bobbin according to the type and thickness of thread, and set the appropriate numeric value.

- **In the case of inputting the measured amount of thread**

  Set the amount of thread to be wound on a bobbin using the numeric value you have measured.

2) Inputting the ratio of thread amount remaining on a bobbin with respect to the fully-wound amount

Estimate the amount of bobbin thread remaining on a bobbin. Input the remaining thread amount in %.
(In the case the bobbin is fully wound with thread, the percentage will be “100 %”.)

The amount of thread remaining on the bobbin is displayed on the bobbin thread counter icon (in %).
When the ratio of thread remaining on the bobbin becomes 20 % or less, the percentage is displayed in red.

The set value is confirmed by pressing .

The table given below indicates the amount of thread fully wound on the bobbin when the bobbin thread counter is used. Use this table as the measure.
* This table should be used for reference since the amount of thread to be round on a bobbin may change according to the type of thread to be used.

	#30	#50	#60	#80 - #90	#100
Polyester Spun	30m	50m	60m	70m	80m
	33yd	55yd	66yd	77yd	87yd
Polyester Filament	30m	70m	90m	100m	150m
	33yd	77yd	98yd	109yd	164yd

■ How to measure the amount of thread wound on a bobbin

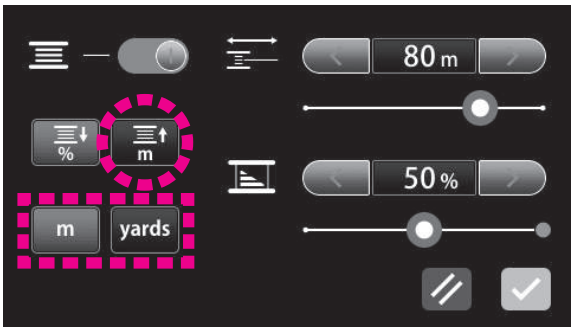

Press to activate the measured amount display.

Set the unit of measured amount of thread by pressing .

The set value is confirmed by pressing .

Start measuring using the bobbin that is fully wound with thread (i.e., 100 %)

The amount of thread used is displayed on the bobbin thread counter icon.

The amount of thread displayed on the bobbin counter icon when the bobbin runs out of thread represents the full amount of thread to be wound on a bobbin.

4.19. Setting the stop position of needle

It is possible to set the position of the needle (upper or lower position) at the time of stopping the sewing machine.

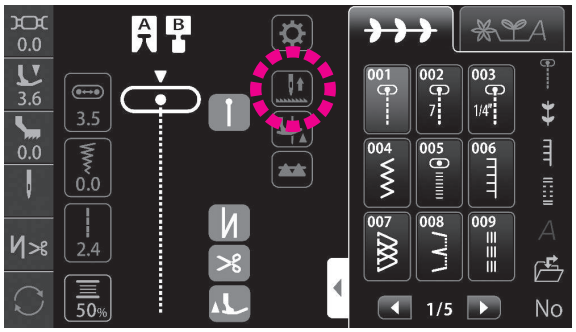

: The sewing machine stops with its needle down

: The sewing machine stops with its needle up

* In the case the “upper stop position” (the sewing machine stops with its needle up) is selected, the pivot function will be automatically turned OFF.

4.20. Pivot setting

It is possible to set so that the presser foot goes up while the needle is kept at the lower position at the time of stopping the sewing machine.

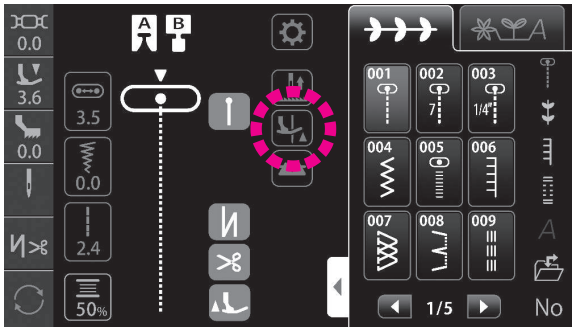

: ON

: OFF

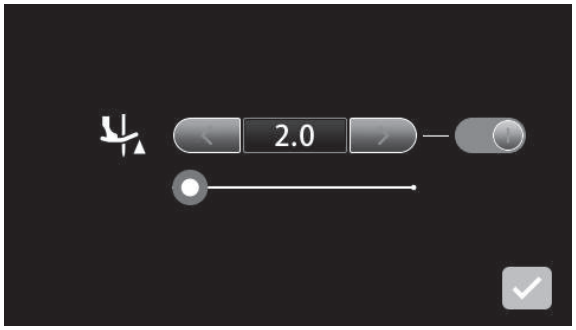

When is pressed, the setting screen is displayed.

- **Setting the ON / OFF of the pivot function**

: ON

: OFF

- **Setting the pivot height**

Adjust the pivot height with .

The set value is confirmed by pressing .

4.21. How to lower the feed dog

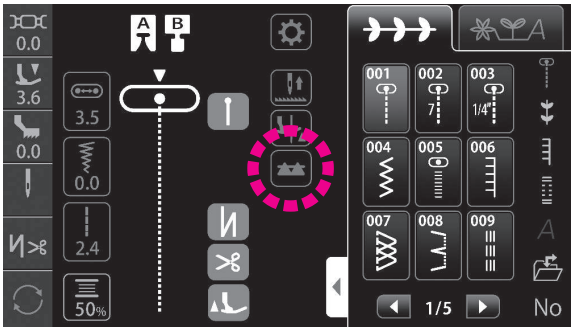

Lift and lower the feed dog by pressing .

: Feed Dog is engaged

: Feed Dog is disengaged

* In the case the feed dog has been lowered, it has to be lifted by pressing the relevant icon after the completion of sewing. The feed dog will be engaged automatically when the machine starts to sew.

5. Operation in detail

5.1. Options

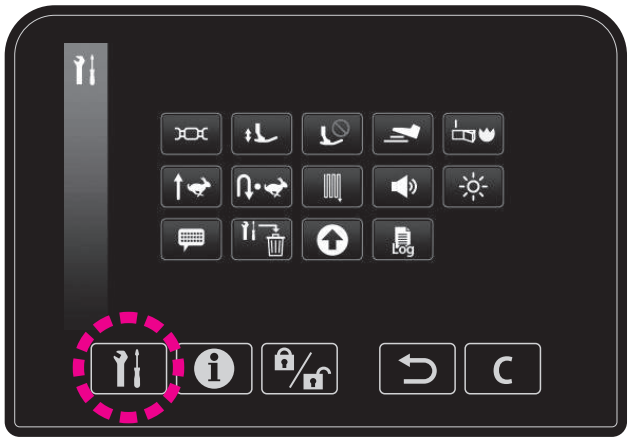

● Options setting screen

It is possible to change the setting of optional functions (14 different kinds).
The changed setting is retained even if the power to the sewing machine is re-turned ON.
Initialize the setting with when you want to reset the optional function setting to its initial value.

■ Type of options

				Default setting
①		Standard thread tension setting	The machine can be set to the standard thread tension setting.	0.0
②		Presser foot lifting height	The machine can be set to the presser foot lifting amount.	6mm
③		Screen to set the functions while presser foot is up	It is possible to set the operation that can be carried out even when the presser foot is lifted.	⃠
④		Foot switch functions	Function can be selected for foot switch.	Reverse stitch
⑤		Start-up	It is possible to select whether the pattern and settings that are used immediately before re-turning the power ON, are retained or initialized.	⃠
⑥		Adjustable starting stitch speed	Sewing speed at sewing-start can be set.	Low speed
⑦		Adjustable reverse stitch speed	Reverse stitch speed and lock stitch speed can be set.	Low speed
⑧		Darning adjustment	Adjust the shape of stitch pattern.	0
⑨		Buzzer volume setting	You can change the volume of buzzer when pressing the icons on touch panel.	Loud
⑩		Brightness adjustment	Brightness of the touch panel screen and that of the sewing area are adjustable.	50
⑪		Selecting language	You can choose one out of nine languages or pictograph.	(Depending on destination)
⑫		Initialization / deletion of the settings	It is possible to reset all of the settings to their initial values or deleted them.	-
⑬		Firmware update	It is possible to update the firmware.	-
⑭		Machine log	You can check the log of the machine.	-

① Standard thread tension setting

The machine can be set to the standard thread tension setting.

* Initial value has been factory-set to “0.0”.

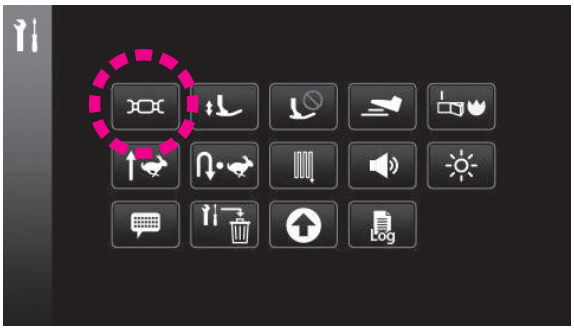

Press .

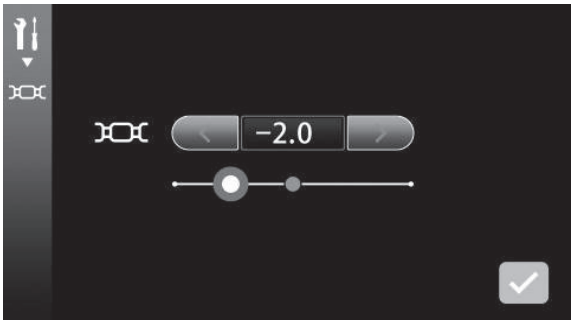

Change the thread tension.

(Setting range: -5.0 - 5.0)

The needle thread tension is decreased.

The needle thread tension is increased.

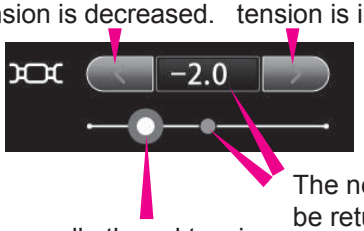

The needle thread tension will be returned to its initial value by pressing the blue frame.

The needle thread tension can also be adjusted by sliding the slide bar to the right or left.

The set value is confirmed by pressing .

② Presser foot lifting height

The machine can be set to the presser foot lifting amount.

* Initial value has been factory-set to “6mm”.

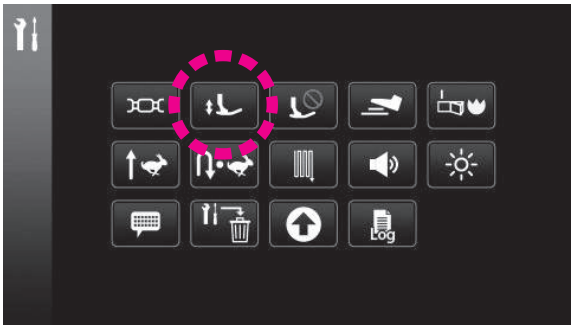

Press .

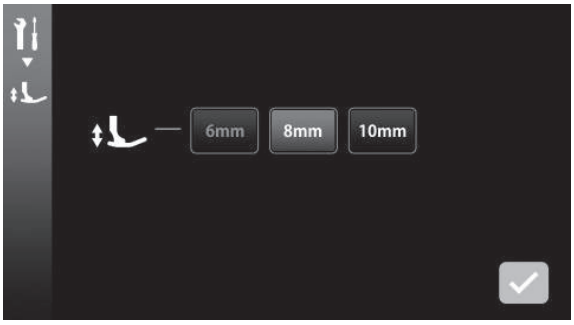

Select the presser foot lifting amount.

The set value is confirmed by pressing .

③ Screen to set the functions while presser foot is up

It is possible to set the operation that can be carried out even when the presser foot is lifted.
The operation you have set can be carried out after the presser foot is automatically lowered even if the presser foot is in its upper position. (Except for lifting / lowering of the needle).
* All of the initial values have been factory-set to “OFF”.

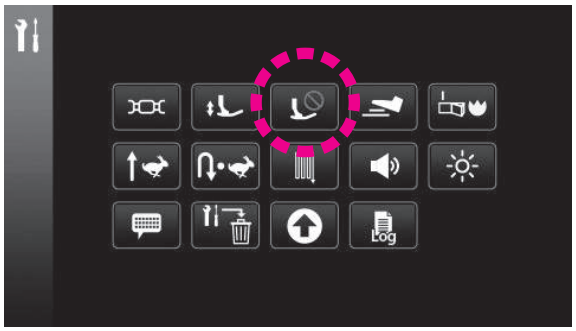

Press .

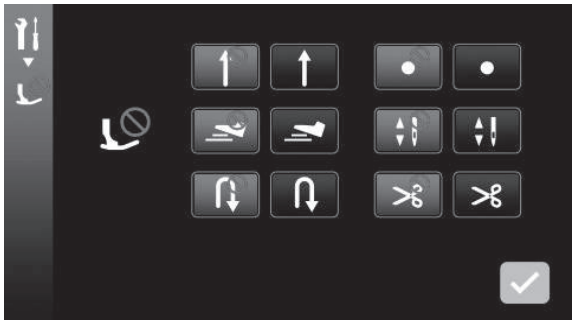

	OFF	ON
Start		
Foot pedal		
Reverse stitch		
Lock stitch		
Lifting / lowering of the needle		
Thread trimming		

The set value is confirmed by pressing .

④ Foot switch functions

Function can be selected for foot switch.
* Initial value has been factory-set to “Reverse stitch”.

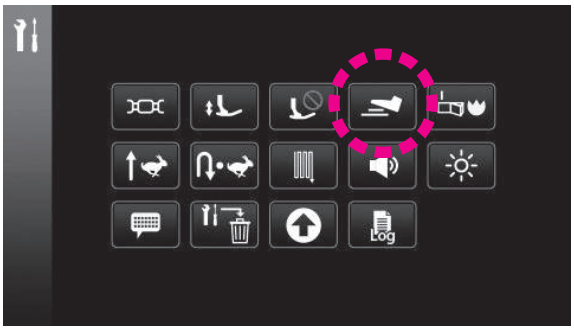

Press .

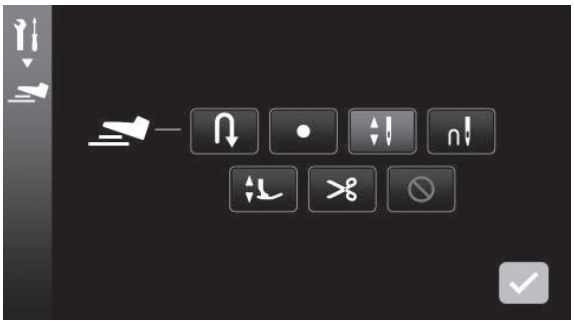

	Reverse stitch		Lifting / lowering of presser foot
	Lock stitch		Thread trimming
	Half stitch sewing		No function
	One stitch sewing		

The set value is confirmed by pressing .

* If the foot switch function is set to “reverse stitch” or “lock stitch” while automatic back tacking, thread trimming and presser foot lifting have been set, it is possible to carry out back tacking, thread trimming and presser foot lifting at the end of sewing.

⑤ Start-up

It is possible to select whether the pattern and settings that are used immediately before re-turning the power ON, are retained or initialized.
* Initial value has been factory-set to “Initialize the pattern”.

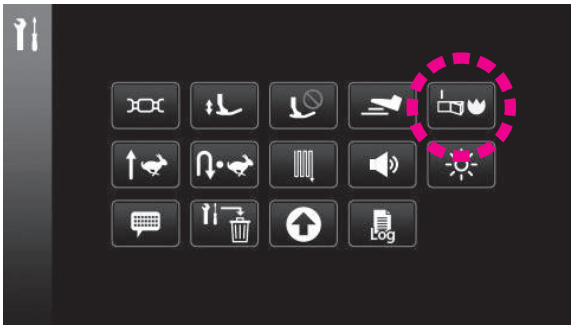

Press .

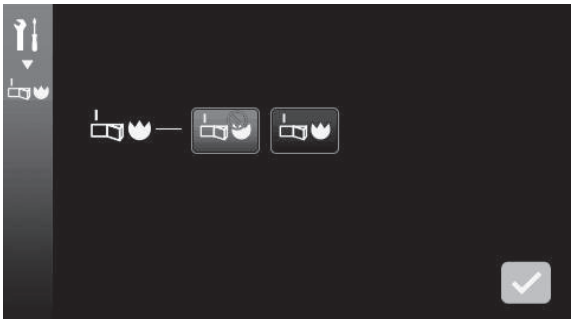

: Initialize the pattern

: Retain the pattern that is used immediately before

The set value is confirmed by pressing .

(Refer to page 17)

⑥ Adjustable starting stitch speed

Sewing speed at sewing-start can be set.
* Initial value has been factory-set to “Low speed”.

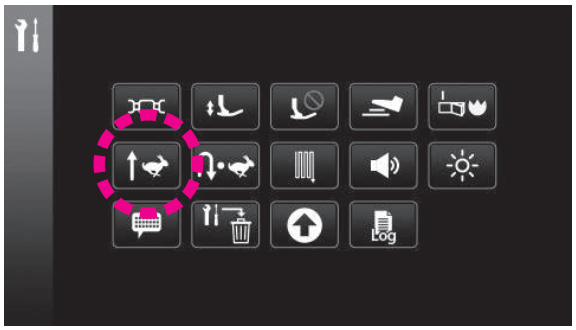

Press .

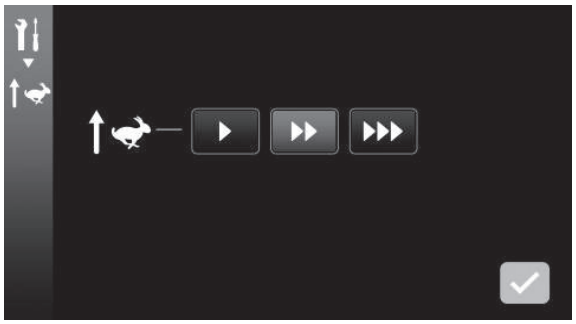

: Low speed

: Standard

: High speed

The set value is confirmed by pressing .

⑦ Adjustable reverse stitch speed

Reverse stitch speed and lock stitch speed can be set.
* Initial value has been factory-set to “Low speed”.

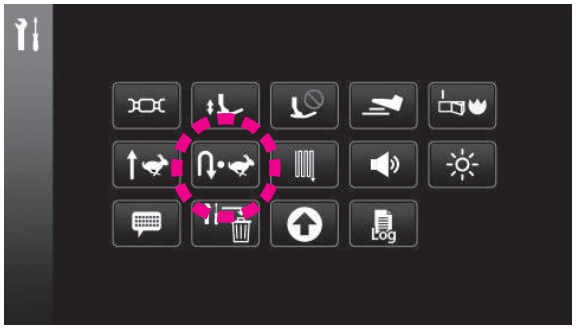

Press .

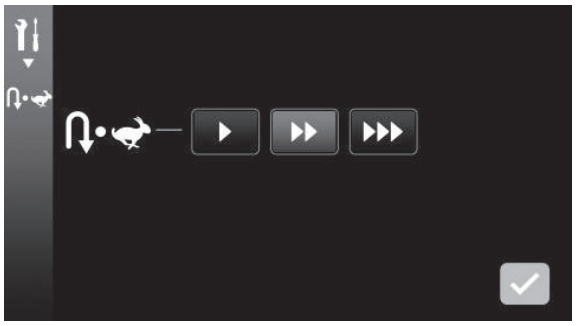

: Low speed

: Standard

: High speed

The set value is confirmed by pressing .

⑧ Darning adjustment

Adjust the shape of stitch pattern.
Adjustable range: -20 - 20
Check the longitudinal balance of feed when you want to sew a pattern beautifully, or having changed the material, thread or interlining.
This adjustment value reflects all patterns.

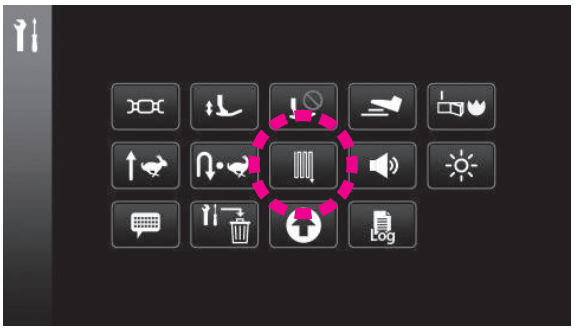

Press .

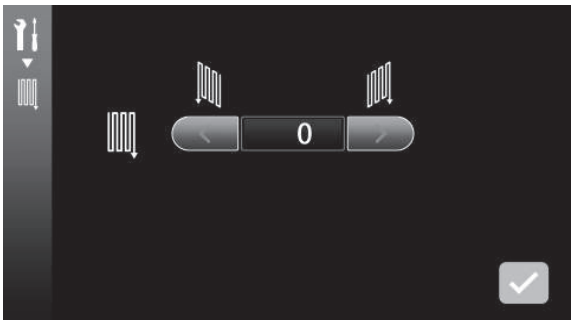

Try trial sewing, adjust while checking the pattern.

The set value is confirmed by pressing .

○ Correct shape	× When right side is higher than left side	× When right side is lower than left side
	Carry out the adjustment while conducting test sewing by pressing .	Carry out the adjustment while conducting test sewing by pressing .

⑨ Buzzer volume setting

You can change the volume of buzzer when pressing the icons on touch panel.
* Initial value has been factory-set to “Loud”.

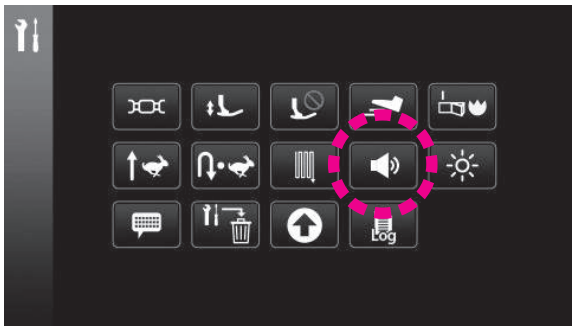

Press .

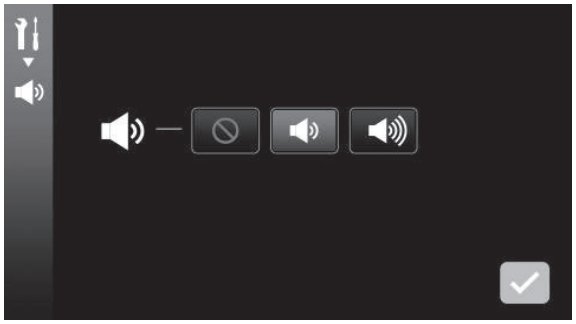

: Mute

: Low

: Loud

The set value is confirmed by pressing .

⑩ Brightness adjustment

Brightness of the touch panel screen and that of the sewing area are adjustable.
Setting range: 0 - 100
* Initial value has been factory-set to “50”.

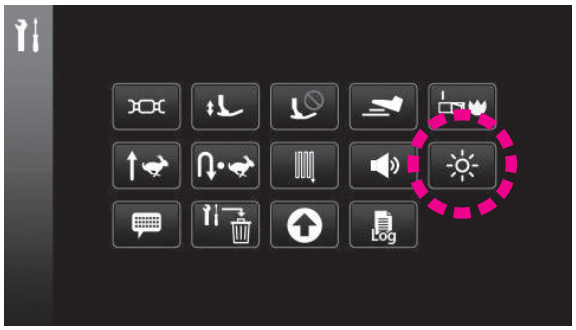

Press .

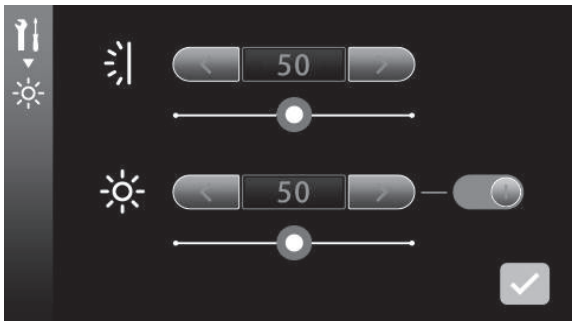

: Brightness of the touch panel

: Brightness of the sewing area

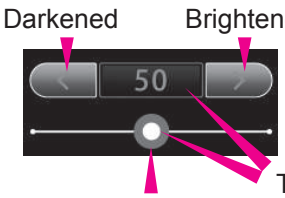

The brightness can also be adjusted by sliding the slide bar to the right or left.

The brightness will be returned to its initial value by pressing the blue frame.

The lighting for the sewing area can be turned OFF.

: ON : OFF

The set value is confirmed by pressing .

⑪ Selecting language

You can choose one out of nine languages or pictograph.
* Default setting is depending on destination.

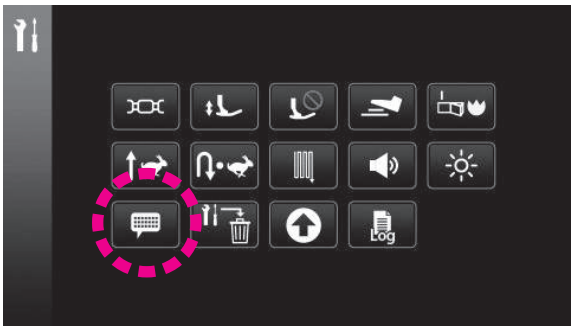

Press .

Select the language you want to use for display.

The set value is confirmed by pressing .

English	Español	Italiano	Français	Nederlands
English	Spanish	Italian	French	Dutch
Deutsch	Русский	Dansk	日本語	
German	Russian	Danish	Japanese	Pictograph

⑫ Initialization / deletion of the settings

It is possible to reset all of the settings to their initial values or deleted them.

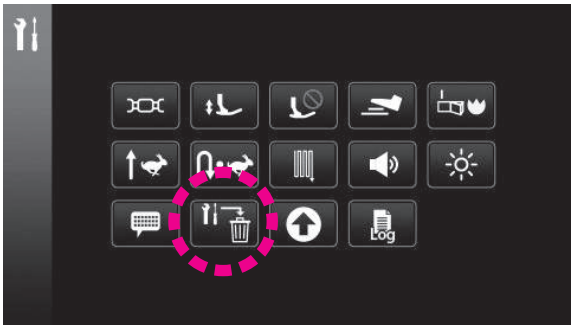

Press .

: Initialize the optional setting

: Delete all of the user memory

All of the optional settings are initialized by pressing , then .

All of the user memory is initialized by pressing , the .

⑬ Firmware update

It is possible to update the firmware.
Contact your distributor if you have any question about the software.

When you update the software with a USB thumb drive, so sure to save only the latest update file on it.
If any other data or earlier version of update file are included, the software cannot be updated properly.

Do not turn the power OFF during the update work.

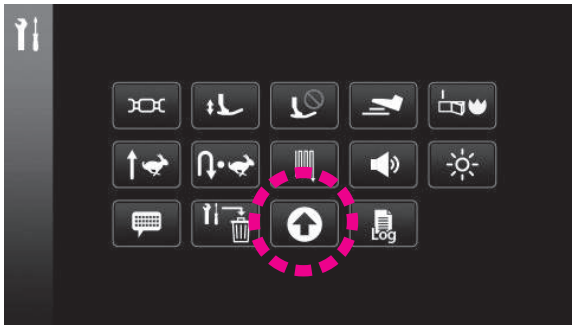

Press .

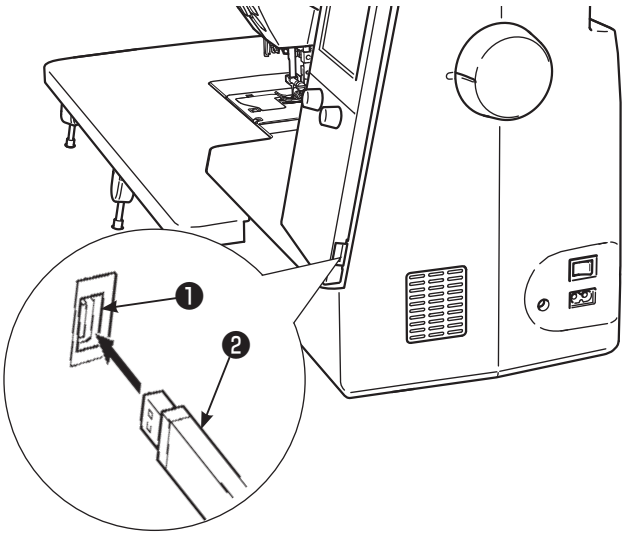

Insert USB thumb drive ❷ which contains no data or contains only the update file into USB slot ❶ .

Caution:
In the case of using a USB that is provided with an access indicator, the access indicator will start blinking for five to six seconds when the USB thumb drive is inserted into the USB slot of your PC or sewing machine until it is recognized.
(The time required until the USB thumb drive is recognized differs with the type of USB thumb drive.)

1. Saving the backup data

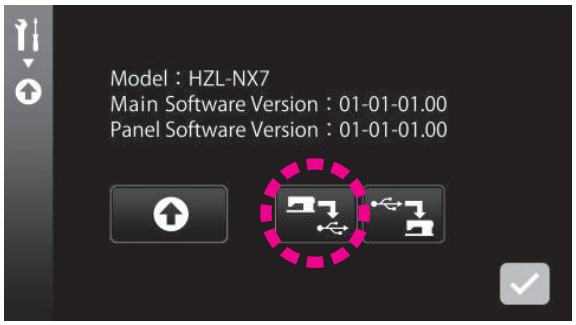

Press .

Backup data is saved on the USB thumb drive.

2. Updating the software

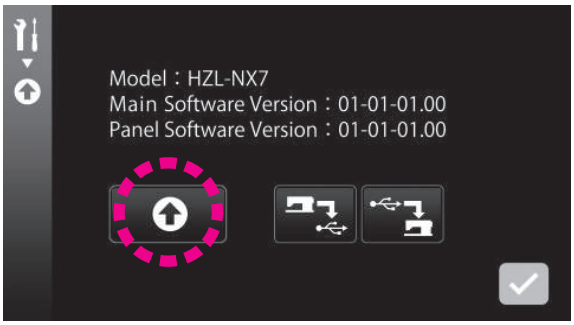

Press .

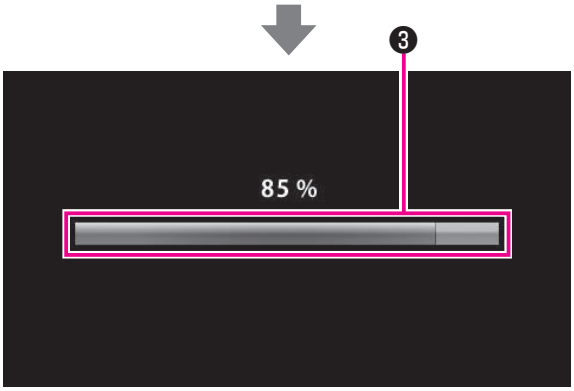

The latest update file is downloaded to the sewing machine.

Caution:
If write progress bar ❸ does not move for three minutes or more, update may have failed.
In such a case, turn OFF the power to the sewing machine.
Remove the USB thumb drive. Then, re-turn ON the power to the sewing machine.

In the case the software updating has failed, the software update screen will be displayed immediately after re-turning the power ON.
Carry out updating of the software on this screen again.

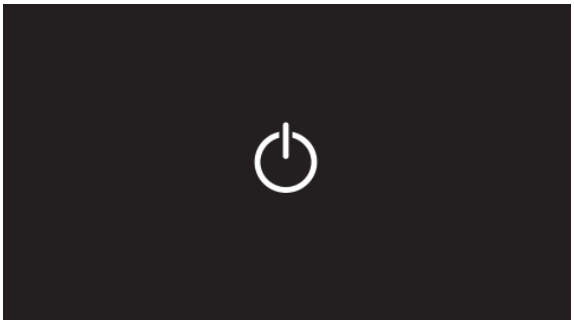

When the software is updated properly, the message “Update complete” is displayed on the screen.
Remove the USB thumb drive and turn OFF the power to the sewing machine. Then, re-turn ON the power to the sewing machine.

3. Loading the backup data

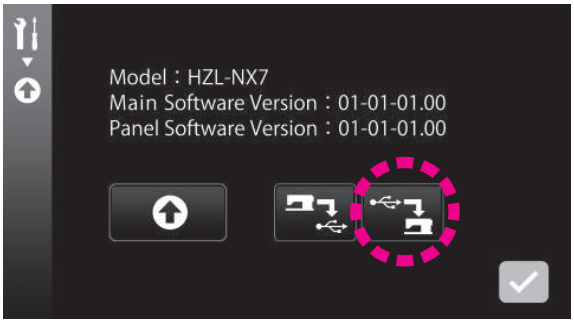

Settings are retained after updating the software. If the settings are totally initialized through the software updating procedure, the settings can be retrieved by loading the backup data.

⑭ Machine log

You can check the log of the machine.

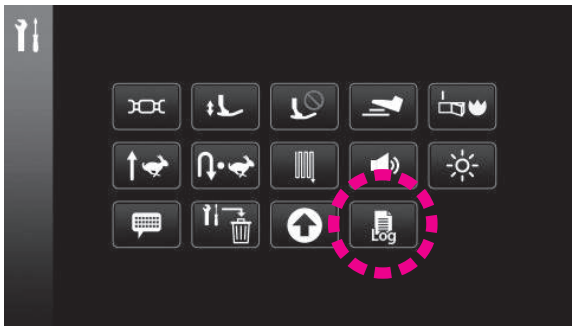

Press .

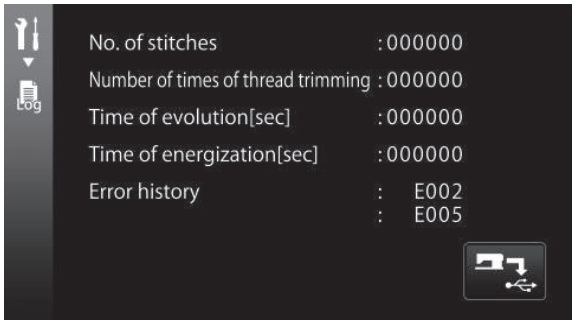

The sewing machine log is displayed.

- Accumulated number of stitches
- Accumulated number of times of thread trimming
- Accumulated operating time
- Accumulated energizing time
- The latest two errors history

● Saving the service data

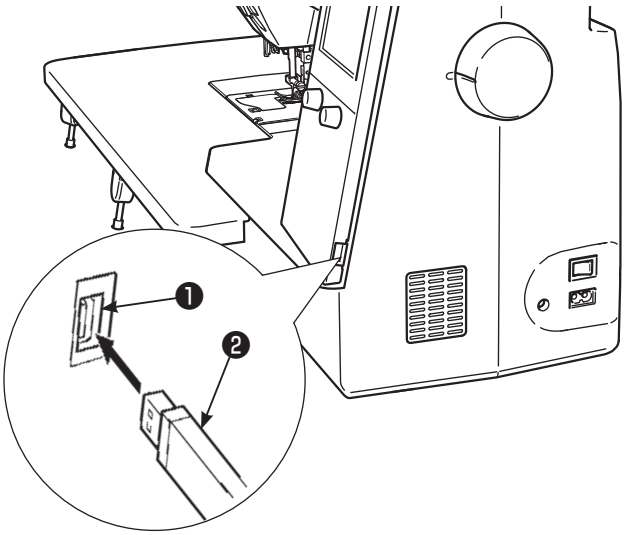

Insert thumb drive ❷ which contains no data or contains only into USB slot ❶ .

Press .

The service data is stored on the USB thumb drive.

5.2. Operation guide

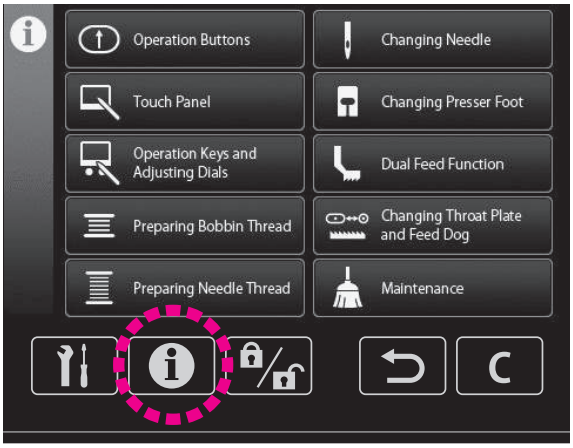

Explanations of the 10 major operation items are displayed.

① Operation Buttons
② Touch Panel
③ Operation Keys and Adjusting Dials
④ Preparing Bobbin Thread
⑤ Preparing Needle Thread
⑥ Changing Needle
⑦ Changing Presser Foot
⑧ "JUKI Smart Feed"
⑨ Changing Throat Plate and Feed Dog
⑩ Maintenance

5.3. Lock mode

If the sewing machine is put in the lock mode with the lock key, operation of all operating button, operating keys touch panel will be disabled. In addition, the sewing machine itself will also be disabled.

The power to the sewing machine should be turned OFF for the sake of safety when changing the presser foot, changing the throat plate and feed dog, changing the needle or taking care of the sewing machine. However, those kinds of work can be carried out while retaining the current settings of the sewing machine by putting the sewing machine in the lock mode.

Press the lock key to put the sewing machine in the lock mode.
Keep the lock key held pressed for one second to cancel the lock mode.

5.4. "Return" operation

It is possible to return the screen to the previous one during the touch panel operation.

In the case the combination stitching is set, the selected pattern can be deleted.

5.5. "Clear" operation

The setting you have changed can be returned to the previous value.

6. Setting for the pattern sewing

6.1. Single stitching mode / combination stitching mode

* Some of the patterns cannot be sewn according to the mode selected.

6.1.1. Single stitching mode

The single stitching mode is used for sewing a single pattern without combining it with other patterns.

(1) Selecting a pattern (letter)

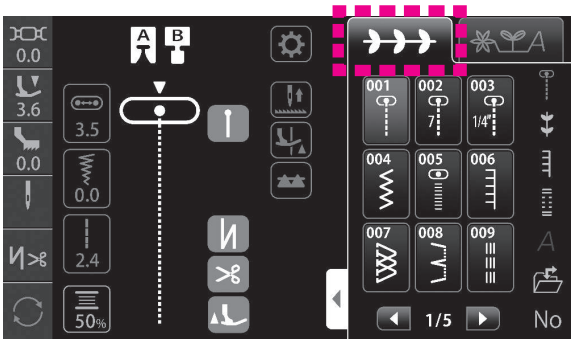

Press .

Select the pattern you want to sew by pressing the icon corresponding to that pattern.

6.1.2. Combination stitching mode

The combination stitching mode is used for sewing two or more patterns in combination.
As many as 70 pieces of patterns can be combined.

(1) Selecting and combining the patterns (letters)

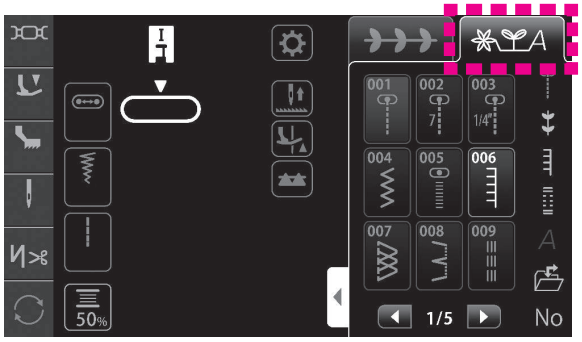

(Example: JUKI♥)

1. Press .

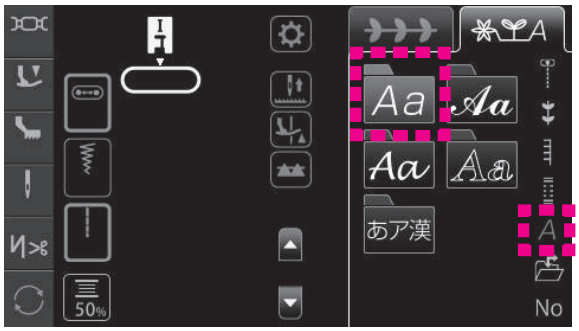

2. Press A , then Aa .

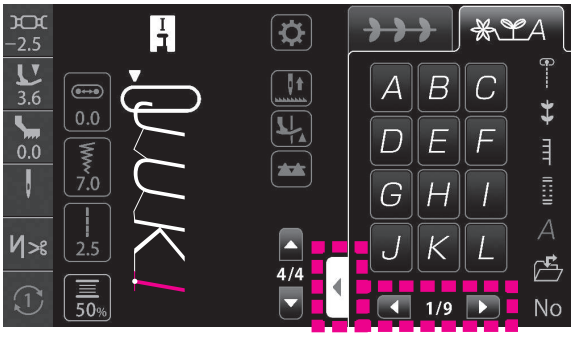

3. Press the icon. Type “JUKI”.

   Page can be scrolled with ◀ ▶ .
   The group of patterns can be displayed in full screen with ◀.

< Full-screen display >

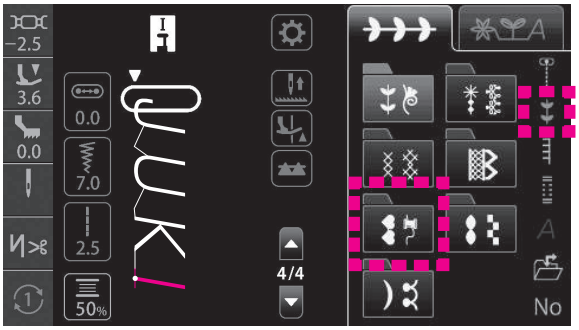

4. Press , then .

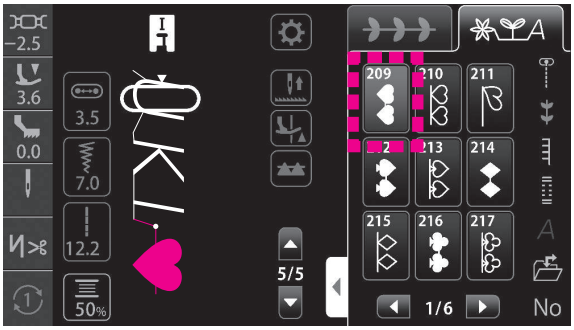

5. Press .

(2) Selecting a space

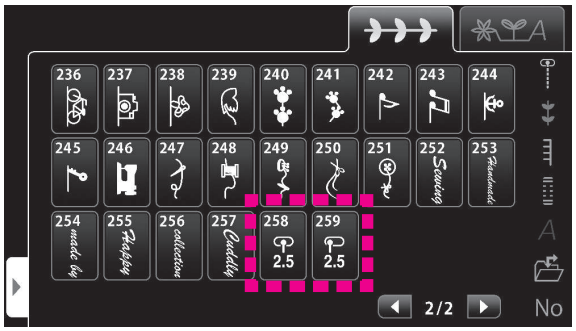

Combine a pattern (letter) with another pattern (letter) while inserting one of the following patterns between them.

- Pattern No.258 (2.5)
- Pattern No.259 (2.5)
- (Small space)
- (Large space)

(3) Adding a pattern (letter)

It is possible to append a pattern (letter) after the selected pattern (highlighted in green or displayed within the green frame).

● In the case of adding a pattern (letter) between the patterns

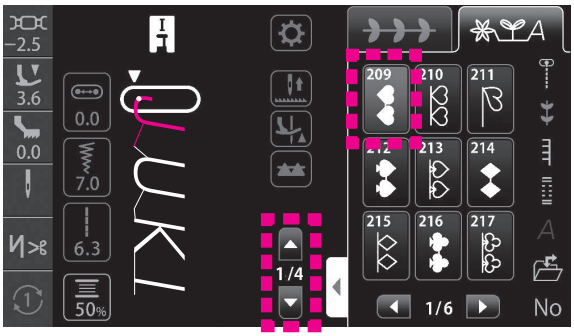

(Example: J♥UKI)

■ In the case of adding a pattern (letter) using the pattern display

1. Select “J” with .
2. Press .

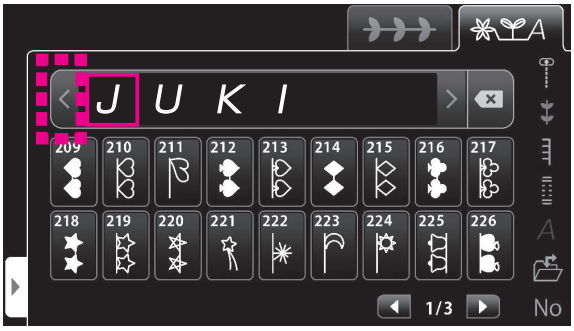

■ In the case of adding a pattern (letter) using the full-screen display

1. Select “J” with .
2. Press .

● In the case of prepending a pattern (letter) at the beginning of the patterns

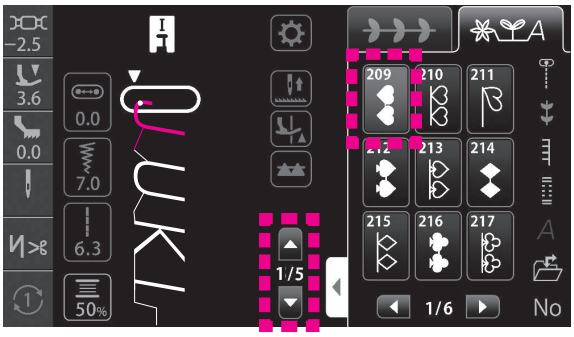

(Example: ♥JUKI♥)

■ In the case of adding a pattern (letter) using the pattern display

1. Select “J” with .
2. Press again. (Color of is paled out.)
3. Press .

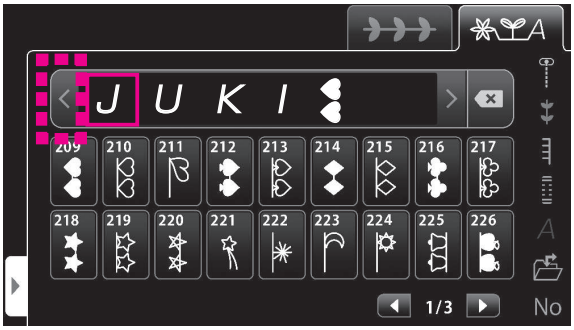

■ In the case of adding a pattern (letter) using the full-screen display

1. Select “J” with .
2. Press again. (Color of is paled out.)
3. Press .

(4) Deleting a pattern (letter)

(Example: ♥JUKI♥ ⇒ ♥JUKI)

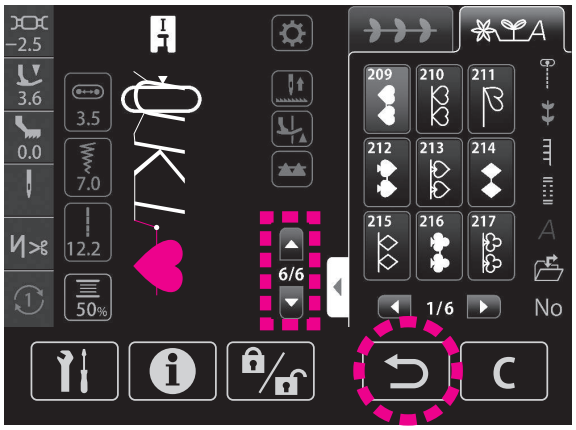

■ In the case of deleting a pattern (letter) using the pattern display

1. Select the pattern you want to delete with ▲ ▼.

   The selected pattern is highlighted in green.

2. Press ↩ .

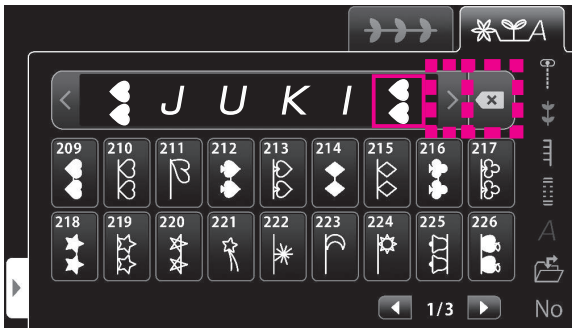

■ In the case of deleting a pattern (letter) using the full-screen display

1. Select the pattern you want to delete with ‹ › .

   The selected pattern is enclosed in □ .

2. Press ⌫ .

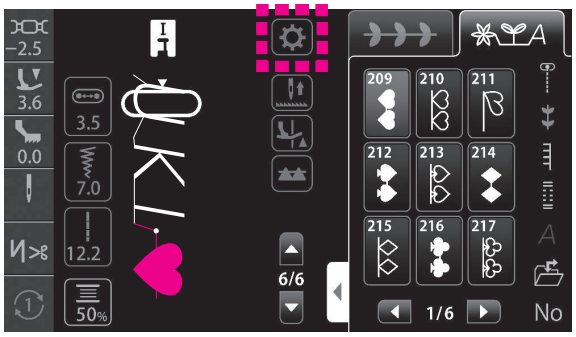

■ In the case of deleting a pattern (letter) on the pattern edit screen

1. Press ⚙ .

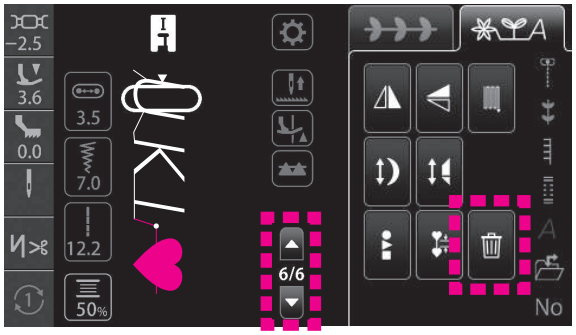

2. Select the pattern you want to delete with ▲ ▼ .

   The selected pattern is highlighted in green.

3. Press 🗑 .

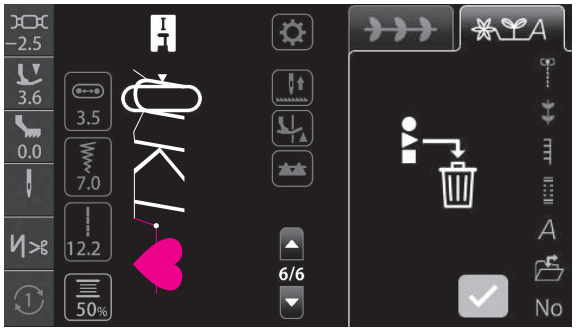

* Press ⓘ, then 🗑. Now, you can delete the combined patterns collectively by pressing ✓.

6.1.3. Setting for the repetition stitching

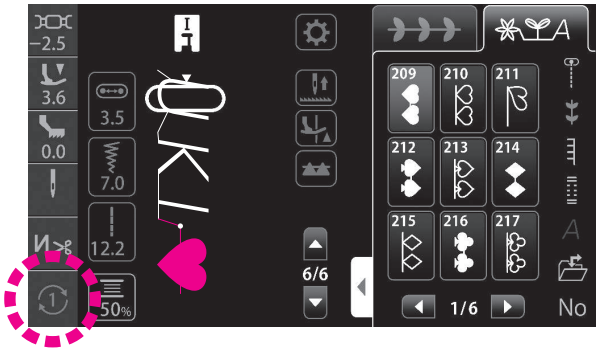

The setting is changed over by pressing the icon.

● In the case of the single stitching mode

: The pattern is sewn in repetition (continuously) (Initial setting)

: One stitch is sewn
: One cycle is sewn

● In the case of the combination stitching mode

: Selected pattern or selected combination of patterns is sewn once. (Initial setting)

: Selected pattern or selected combination of patterns is sewn continuously.

6.2. How to select a stitch pattern

☆ There are 351 types of stitch patterns.
☆ When turning on the machine, the straight stitch of the center needle position is chosen automatically.

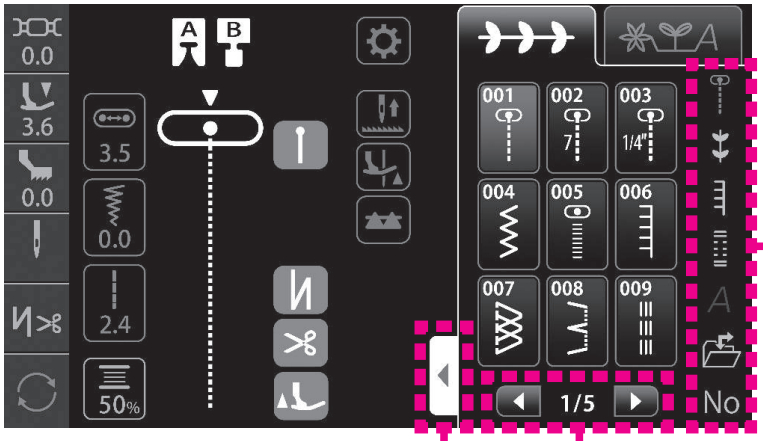

Select the pattern by pressing the icon.

The group of pattern can be displayed in full screen with the selection screen extension tab.

The page can be scrolled with the page changeover icon.

6.2.1. Practical patterns

No.	Pattern	Application		Refer to page
001		Center needle position	Straight stitch	82
002	7	Piecing 7mm		88
003	1/4"	Piecing 1/4”		88
004		Zigzag stitch		-
005		Denser zigzag		-
006		Blanket		-
007		Over casting stitch		89
008		Blind stitch		90
009		Straight reinforced stitch		-

No.	Pattern	Application		Refer to page
010		Left needle position	Straight stitch	82
011		Back straightline stitch		-
012		Center needle position	Straight stitch for elastic	-
013		Triangular zigzag stitch		-
014		Right needle position	Zigzag stitch	-
015		Left needle position		-
016		Back zigzag stitch		-
017		Ornamental pattern		-
018		Two point zig zag		-

No.	Pattern	Application	Refer to page
019		Triple standard zigzag	-
020		Three point zig zag	-
021		Butting stitch	-
022		Overcasting stitch	89
023		Overcasting stitch Used for lightweight material	89
024		Overcasting stitch Used for flexible material	-
025			-
026			-
027		Ornamental pattern	-
028			-
029			-
030		Blind stitch Used for lightweight material	90
031		Blind stitch Used for flexible material	90
032		Shell tuck	93
033			93
034		Bar tack	94
035	MEM	Bar tack (Memory) * Size of bartacking you have sewn once can be stored in memory.	94

No.	Pattern	Application	Refer to page
036		Reinforced stitch	-
037			-
038		Eyelet	96
039			
040			
041			
042			
043		Darning stitch	-
044			-
045			-

6.2.2. Decorative patterns

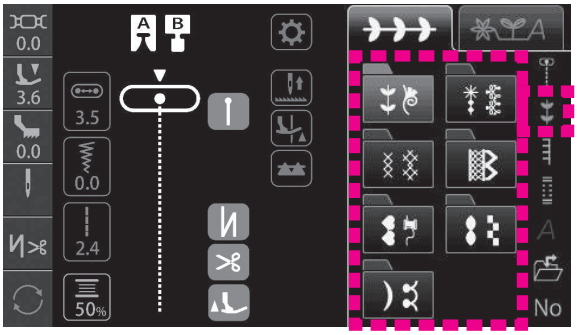

Select the folder. Then, select the pattern you want to sew from the folder.

No.	Pattern	No.	Pattern	No.	Pattern
101		114		127	
102		115		128	
103		116		129	
104		117		130	
105		118		131	
106		119		132	
107		120		133	
108		121		134	
109		122		135	
110		123		136	
111		124		137	
112		125			
113		126			

No.	Pattern	No.	Pattern	No.	Pattern
138		155		172	
139		156		173	
140		157		174	
141		158		175	
142		159		176	
143		160		177	
144		161		178	
145		162		179	
146		163		180	
147		164		181	
148		165		182	
149		166		183	
150		167		184	
151		168		185	
152		169		186	
153		170		187	
154		171		188	

No.	Pattern
189	
190	
191	
192	
193	
194	
195	
196	
197	

No.	Pattern
198	
199	
200	
201	
202	
203	
204	
205	
206	
207	
208	

No.	Pattern	No.	Pattern	No.	Pattern
209		226		243	
210		227		244	
211		228		245	
212		229		246	
213		230		247	
214		231		248	
215		232		249	
216		233		250	
217		234		251	
218		235		252	Sewing
219		236		253	Handmade
220		237		254	made by
221		238		255	Happy
222		239		256	collection
223		240		257	Cuddly
224		241		258	2.5
225		242		259	2.5

No.	Pattern	No.	Pattern
260		277	
261		278	
262		279	
263			
264			
265			
266			
267			
268			
269			
270			
271			
272			
273			
274			
275			
276			

No.	Pattern
280	
281	
282	
283	
284	
285	
286	
287	
288	
289	
290	

6.2.3. Quilt patterns

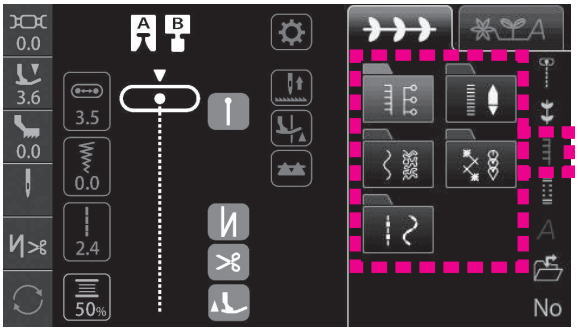

Select the folder. Then, select the pattern you want to sew from the folder.

No.	Pattern	No.	Pattern	No.	Pattern
006		312		324	
301		313		325	
302		314		326	
303		315		327	
304		316		328	
305		317		329	
306		318		330	
307		319		331	
308		320		332	
309		321		333	
310		322		334	
311		323			

No.	Pattern
005	
335	
336	
337	
338	
339	
340	
341	
342	
343	
344	

No.	Pattern	No.	Pattern
345		356	
346		357	
347		358	
348		359	
349		360	
350		361	
351		362	
352		363	
353		364	
354		365	
355			

No.	Pattern	No.	Pattern
366		379	
367		380	
368		381	
369		382	
370		383	
371		384	
372		385	
373		386	
374		387	
375		388	
376		389	
377		390	
378			

No.	Pattern	No.	Pattern
391		393	
392		394	

6.2.4. Buttonhole patterns

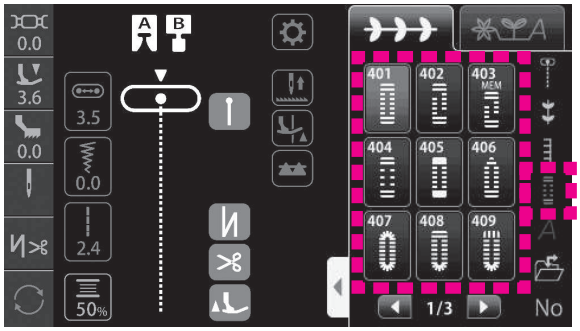

No.	Pattern	Application	Refer to page
401		Standard buttonholes	104
402		2-step buttonhole	110
403	MEM	2-step buttonhole (Memory) * It is possible to store the size of buttonhole you have sewn once in memory.	110
404		Standard buttonholes	104
405			104
406		Decorative	104
407		Rounded end	104
408			104
409			104

No.	Pattern	Application	Refer to page
410		Keyhole buttonholes	104
411			104
412			104
413			104
414		For knit	104
415			104
416			104
417			104
418		Decorative	104
419			104
420			104
421		Basting stitch for buttonholing	109
422		Button sewing	112

6.2.5. Letters A

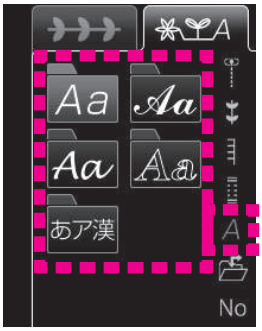

Select the type of letter (font).

A	Capital change-over icon
a	Small letter changeover icon
ÄÅ	Umlaut change-over icon
1!	Number / sign changeover icon
あ/ア/漢/1!	Hiragana/Katakana/Kanji (Chinese character) /Numeric changeover icon
よこ / たて	Horizontal/vertical writing changeover icon
゛゜大↔小	" / ° / Upper case /Lower case changeover icon

Select the letter.

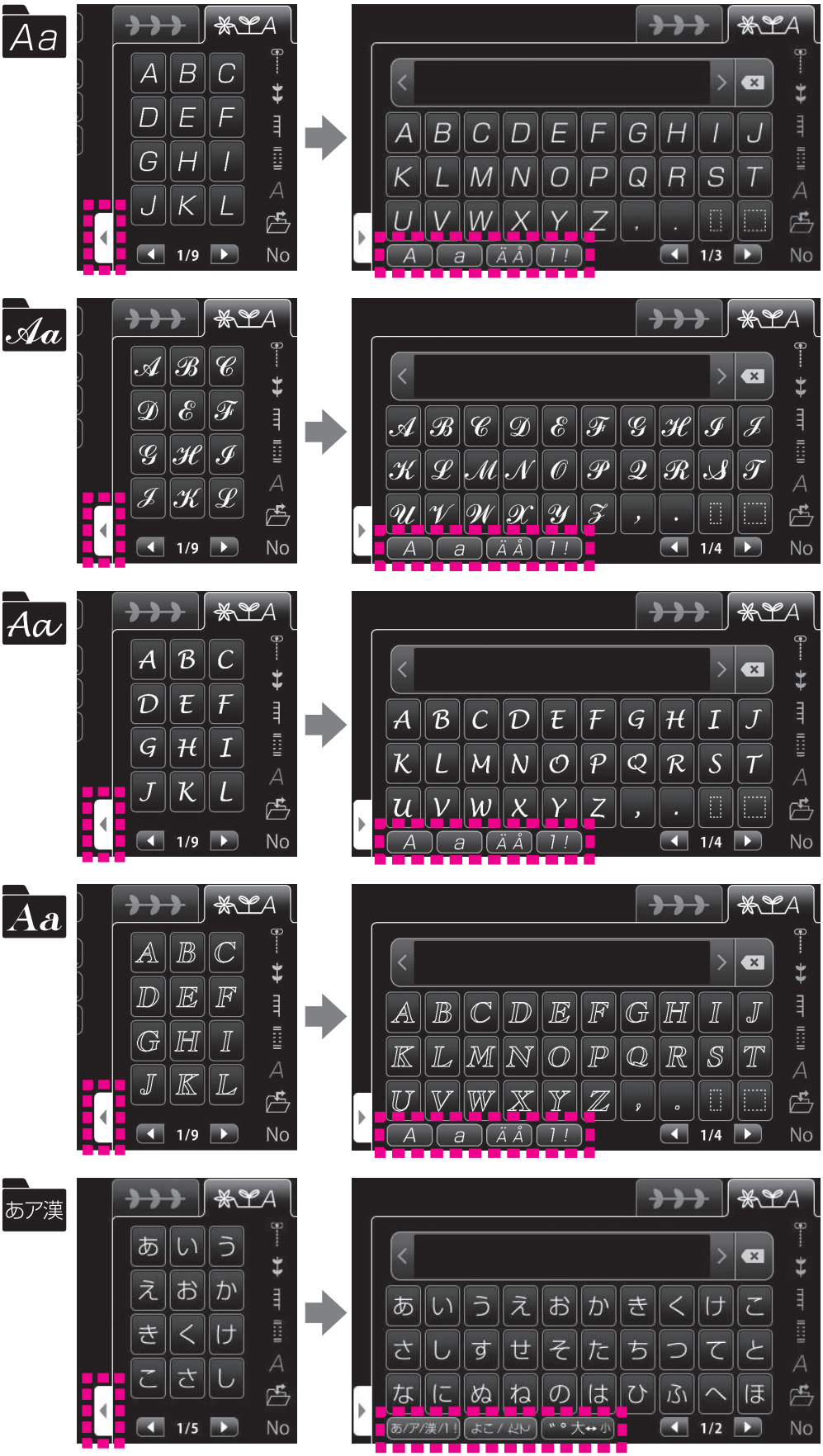

6.2.6. User memory

It is possible to store the combinations of patterns and the set values in memory.
There are 10 folders in total for saving.

(1) Save

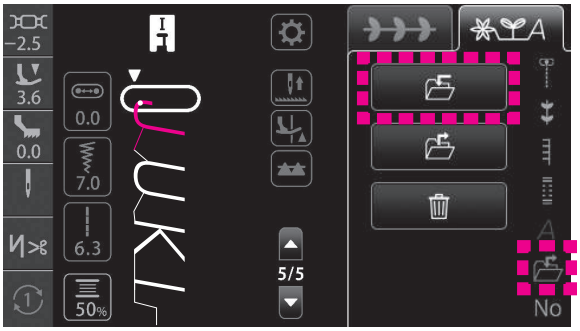

1. Press , then .

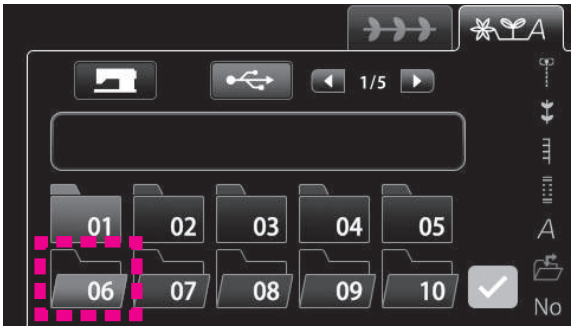

2. Press the icon corresponding to the folder in which you want to save the data.
   * means there exists already a pattern.
   * means empty and available for saving pattern.

   The pattern is saved by pressing .

(2) Call

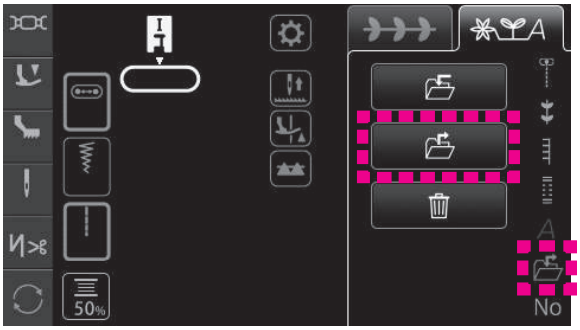

1. Press , then .

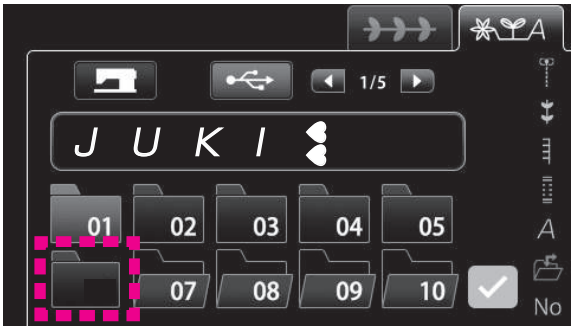

2. Press the icon corresponding to the folder which contains the pattern you want to call.

   The pattern is called by pressing .

(3) Deletion

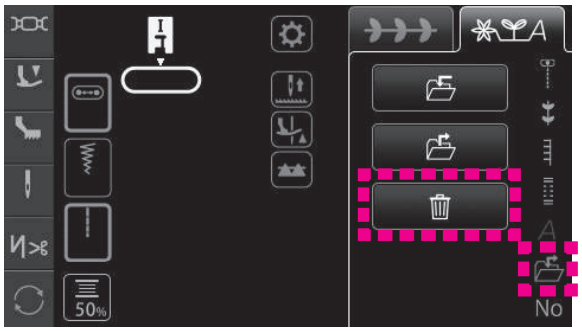

1. Press , then .

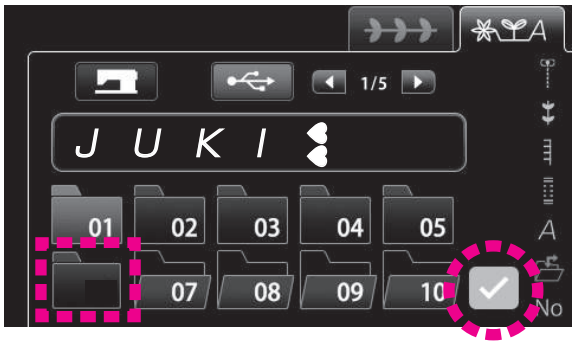

2. Press the icon corresponding to the folder which contains the pattern you want to delete.

   Press .

3. The pattern is deleted by pressing .

6.2.7. How to select the pattern by selecting its number

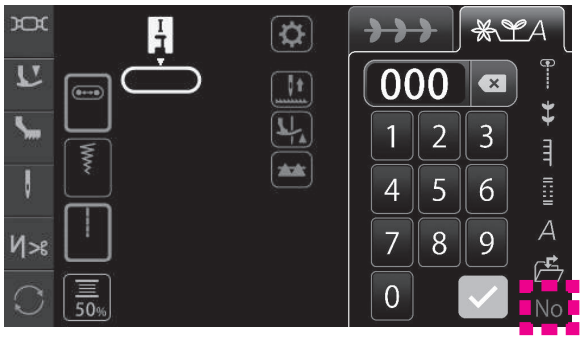

1. Press No .
2. Select the pattern by inputting its pattern number.
3. The pattern you select is displayed by pressing .

6.3. Types of edit functions and how to use them

6.3.1. Adjusting the darning

The darning pattern may be deformed according to the type and thickness of material, type of adhesive interlining and sewing speed.
Before starting sewing of the pattern, trial stitching should be carried out under the same sewing condition as the actual sewing to check whether the pattern is correctly sewn.
If it is found that the pattern is deformed during trial stitching, adjust the sewing condition as described below.

(1) Adjusting the darning of a pattern

In the case the selected pattern is found to be deformed during trial stitching…

1. Press .

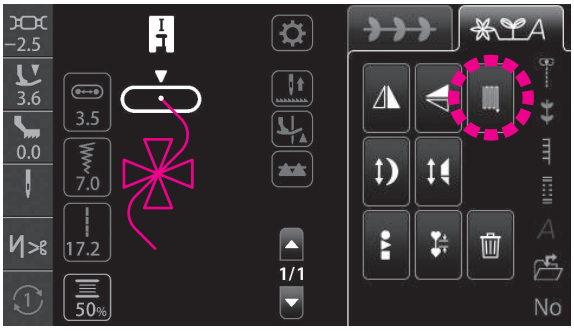

2. Press .

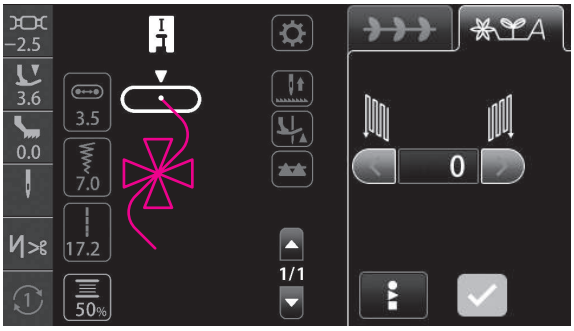

3. The darning adjustment screen is displayed.

○ Correct shape	× When right side is higher than left side	× When right side is lower than left side
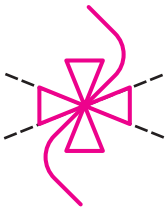	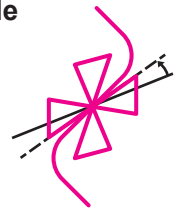	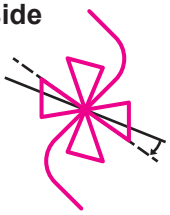
	Carry out the adjustment while conducting test sewing by pressing .	Carry out the adjustment while conducting test sewing by pressing .

Carry out adjustment until the correct-in-shape pattern can be sewn. Then, finish adjustment.
The set value is confirmed by pressing .

(2) Adjusting the darning of combined patterns

In the case the selected pattern is found to be deformed during trial stitching…

1. Press .

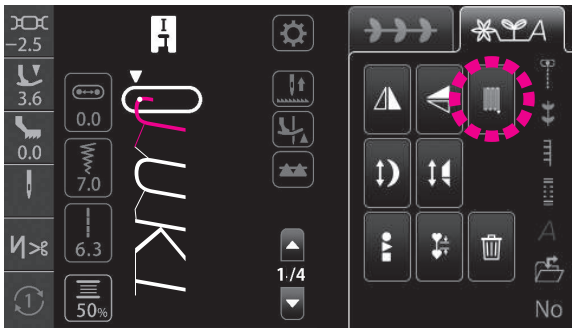

2. Press .

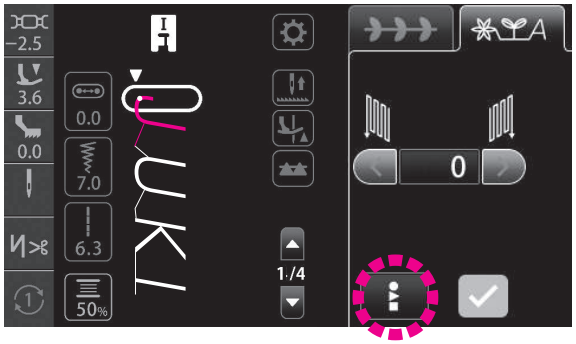

3. The darning adjustment screen is displayed.

   Press .

○ Correct shape	× When right side is higher than left side	× When right side is lower than left side
	Carry out the adjustment while conducting test sewing by pressing .	Carry out the adjustment while conducting test sewing by pressing .

Carry out adjustment until the correct-in-shape pattern can be sewn. Then, finish adjustment.
The set value is confirmed by pressing .

6.3.2. Pattern inversion

Invert the pattern. Then, press .

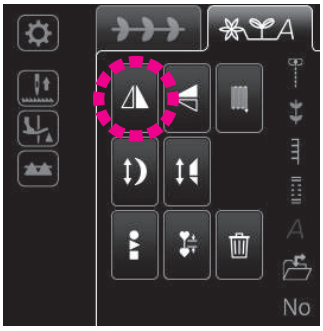

(1) Horizontal inversion

Press when you want to sew a horizontally-inverted pattern.

The horizontally inverted pattern is displayed.

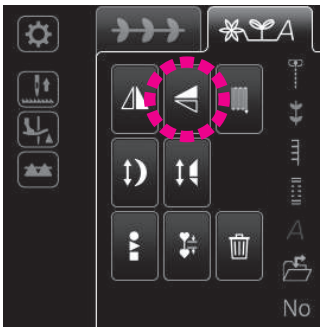

(2) Vertical inversion

Press when you want to sew a vertically-inverted pattern.

The vertically inverted pattern is displayed.

* Horizontal inversion and vertical inversion are not applicable to some patterns.
* It is also possible to “vertically invert the horizontally-inverted pattern” or “horizontally invert the vertically-inverted pattern”.

6.3.3. Changing the elongation size

The pattern length can be changed without changing the stitch density of a pattern.

● Patterns that can be elongated

271	272	273	274	275	276	277	278	279	280
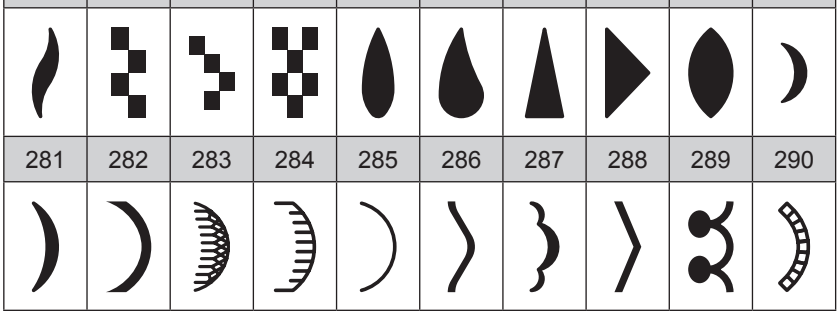									
281	282	283	284	285	286	287	288	289	290

Setting range: “×1” - “×5”

* Initial value has been factory-set to “×1”.

1. Invert the pattern. Then, press .

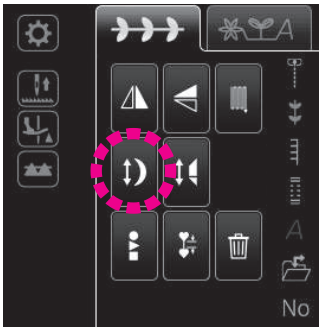

2. Press .

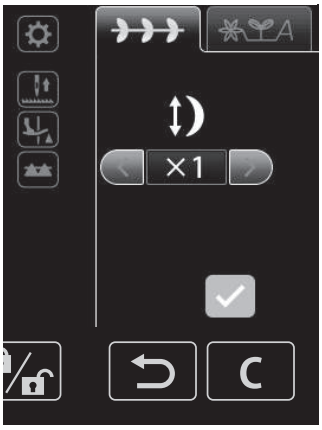

3. Select the elongation size.

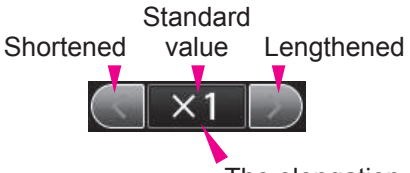

The elongation size will be returned to its initial value by pressing the blue frame.

The initial value is also restored by pressing C .

The set value is confirmed by pressing .

6.3.4. Changing the tapering size

Refer to page 102 for details.

6.3.5. Selecting the combined patterns collectively

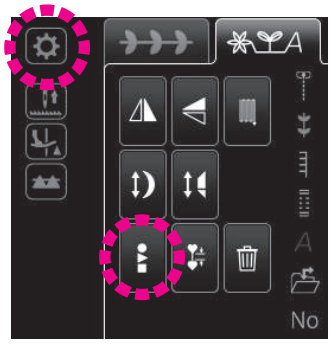

Press this icon when you want to collectively select all of the combined patterns.

6.3.6. Deletion

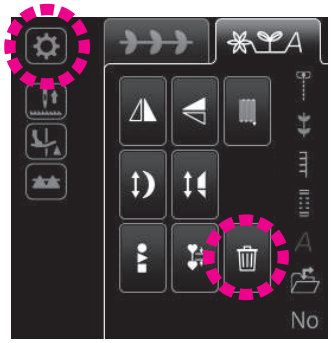

Press this icon when you want to delete the combined patterns.

Press . Then, press . Now, all of the combined patterns can be collectively deleted by pressing .

6.3.7. Setting the interval between patterns

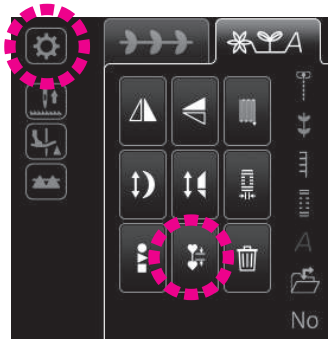

Press this icon to decrease the interval between patterns.
To return the interval between patterns to the standard one, press this icon again.
In the standard setting, lock stitch is set at the end of the pattern. If you decrease the stitching interval, the lock stitch will be omitted.

6.3.8. Change of seam width of buttonhole

Refer to page 108 for details.

7. Sewing

7.1. Straight stitch

No.	Pattern	Presser foot
001		Standard presser foot (A)

⚠ Leave the machine in Lock mode

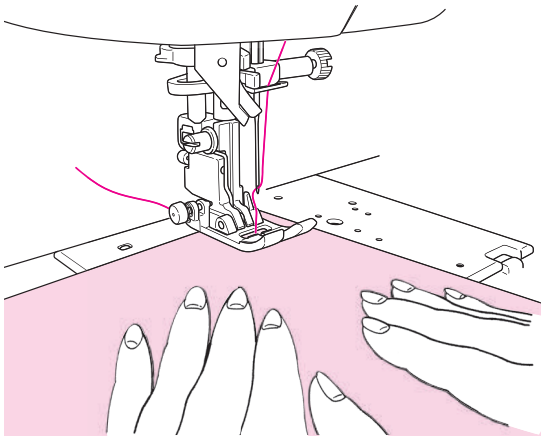

■ Sewing start

Pull the needle and bobbin threads under the presser foot to the rear of the machine and lower the presser foot to start sewing.

Screen to set the functions while presser foot is up

It is possible to start sewing even if the presser foot is lifted. (Refer to page 52)

Adjustable starting stitch speed

Sewing speed at sewing-start can be set.
(Refer to page 54)

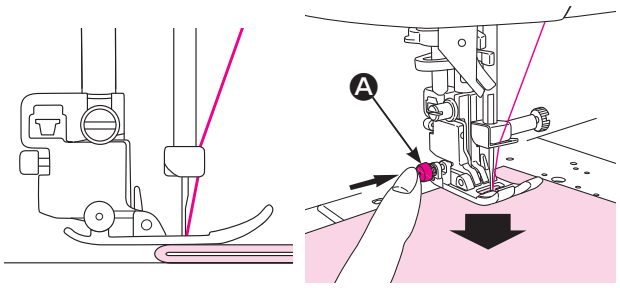

★ When sewing the edge of thick fabrics

Turn the hand wheel and let the needle enter at the position of sewing start. Push the black button Ⓐ by finger and lower the presser foot. Release the finger from the black button and start sewing. When the presser foot will be on the fabric completely, the black button will be disengaged automatically.

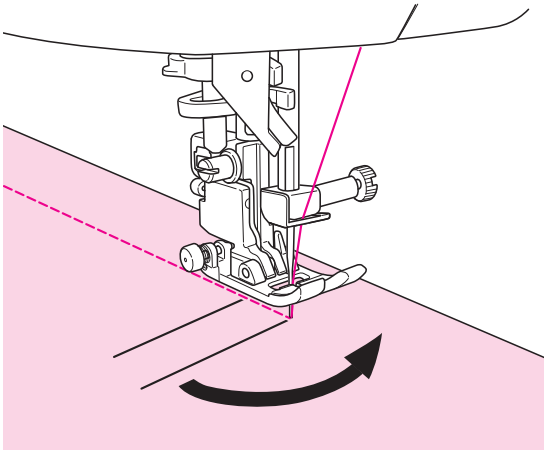

■ When changing the sewing direction

① Stop the sewing machine when the position for changing the direction of sewing is reached.

② If the needle is not penetrated into the material at that position, press the needle up/down button to allow the needle to penetrate into the material. Then, lift the presser foot.

* The sewing machine has been factory-set at the time of shipment, so that the needle penetrates into the material when the sewing machine is stopped.

③ Change the direction of sewing with the needle penetrated into the material. Then, lower the presser foot and start sewing.

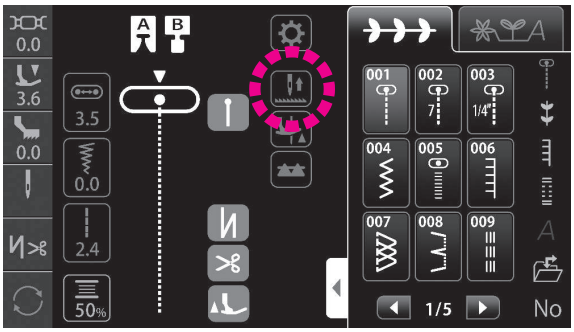

● Changing over the needle stop position

It is possible to change the stop position to which is the needle is brought when the sewing machine is stopped.

: The sewing machine stops with its needle up

: The sewing machine stops with its needle down

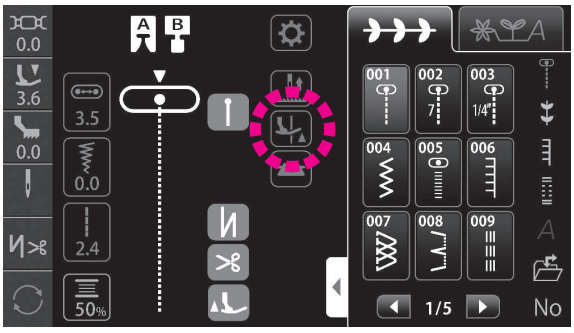

● Presser foot pivot function

You can select the setting where the presser foot goes up with the needle held in the needle-down stop position when you stop the sewing machine.

: Pivot function is ON

: Pivot function is OFF

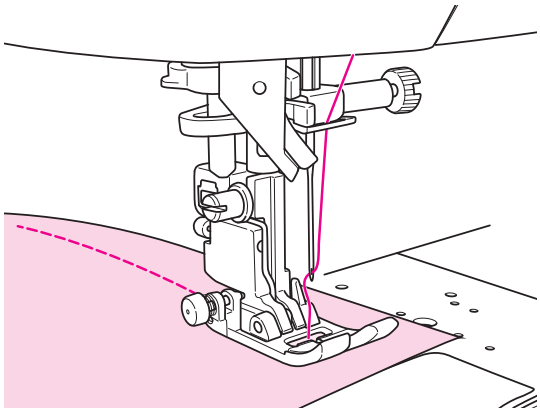

■ Sewing end

Stop the sewing machine.

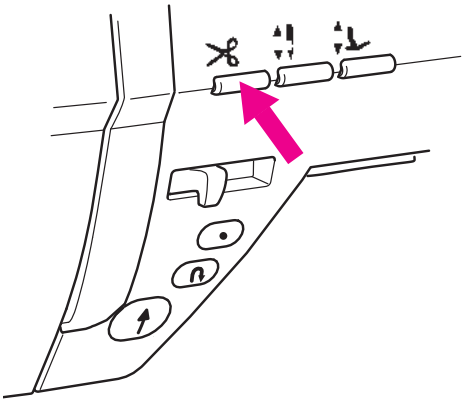

★ Thread trimming

<Using the thread trimming button>

Press the thread trimming button to trim the thread.
Lift the presser foot and remove the material from the sewing machine.

Notes for thread trimming:

1. Do not use thread thicker than No.30.
2. After trimming, the stitch can be done without pulling up bobbin thread.
3. When sewing again after thread trimming, if you pull up the bobbin thread again and place it underneath the presser foot together with needle thread, you can avoid birds nest on the wrong side of the fabric.
4. Regularly clean the machine (refer to page 119), as dust in the area of the thread trimming unit may cause mal-function.

<Using the foot switch>

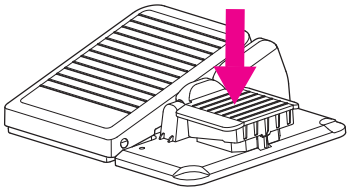

Foot switch functions

It is possible to set so as to trim the thread by pressing the foot switch. (Refer to page 53)

Press the foot switch to trim the thread.

<Using the thread cutter>

Lift the needle and lift the presser foot. In this state, it is possible to trim the thread with thread trimmer that is mounted on the face plate cover.

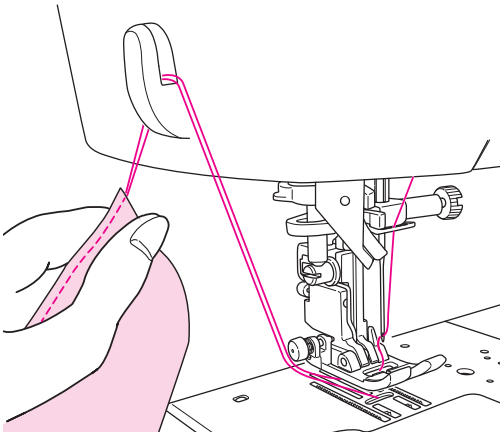

Presser foot lift after trimming setting

It is possible to set so that the presser foot goes up automatically after thread trimming.
(Refer to page 42)

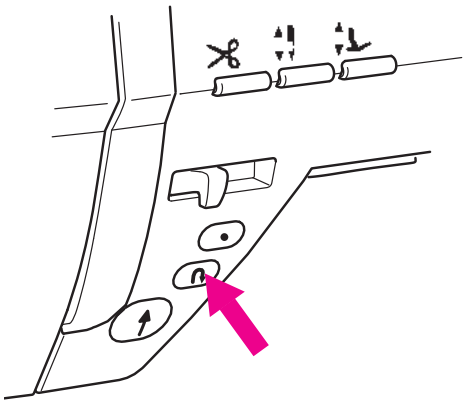

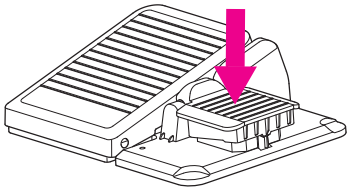

■ Reverse stitch

Use the reverse stitch button when you want carry out back tacking (reverse stitching) at the beginning and end of sewing.

Foot switch functions

It is possible to set so as to carry out reverse stitching as long as the reverse stitch button is held pressed. (Refer to page 53)

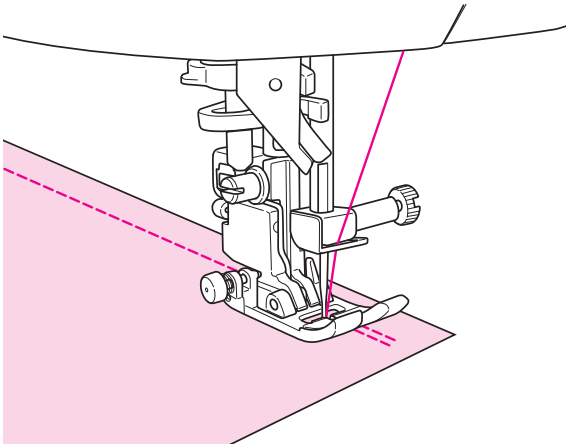

<When start/stop button is used>
The sewing machine carries out reverse stitching as long as the reverse stitch button is held pressed, and stops the sewing when the reverse stitch button is released.

<When foot controller is used>
The sewing machine carries out reverse stitching as long as the reverse stitch button is held pressed, and sews the material in the forward direction when the reverse stitch button is released.
In the case of sewing one-point stitches or letters, the sewing machine stops after the completion of lock stitches.

Adjustable reverse stitch speed

Reverse stitch speed and lock stitch speed can be set. (Refer to page 54)

Setting the automatic back tacking, thread trimming and presser foot lifting

The back tacking at the beginning and end of sewing and the back tacking and thread trimming / presser foot lift after thread trimming at the end of sewing can be set. (Refer to page 42)

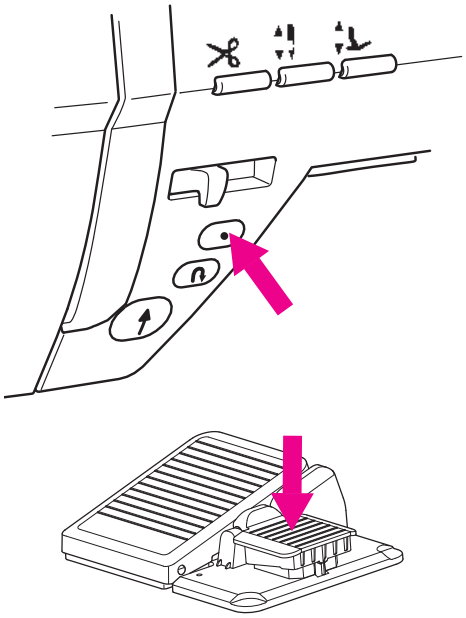

■ Lock stitch

Use the lock stitch button when you want to carry out discreet back tacking (lock stitching) at the beginning and end of sewing.

★ Sewing start

Press the lock stitch button at the position you want to carry out lock stitching.
The sewing machine carries out lock stitching and stops.

Foot switch functions

It is possible to set so as to carry out lock stitching by pressing the foot switch. (Refer to page 53)

★ Sewing end

<When start/stop button is used>
Push the lock stitch button at the end of sewing.
The sewing machine sews lock stitches and stops.

<When foot controller is used>
Press the foot switch when the end of sewing is reached.
The sewing machine sews lock stitches and stops.

* When you push the button while sewing one-point stitches or letters, the sewing machine sews until one cycle of the selected pattern is completed, sews lock stitches and stops. The start/stop button lights up in orange during the one cycle.

Adjustable reverse stitch speed

Reverse stitch speed and lock stitch speed can be set. (Refer to page 54)

Setting the automatic back tacking, thread trimming and presser foot lifting

The back tacking at the beginning and end of sewing and the back tacking and thread trimming / presser foot lift after thread trimming at the end of sewing can be set. (Refer to page 42)

7.2. Inserting zippers

No.	Pattern	Presser foot
001		Zipper presser foot (B)

⚠ Leave the machine in Lock mode

*** Make sure to use center needle position (Stitch pattern No. 001).**

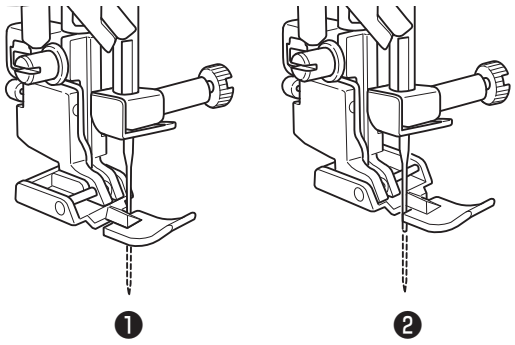

1 **Attach the zipper presser foot (B) to the machine.**

When sewing the left side of the zipper, place the zipper under the right portion ❶ of the zipper presser foot.
When sewing the right side of the zipper, place the zipper under the left portion ❷ of the foot.

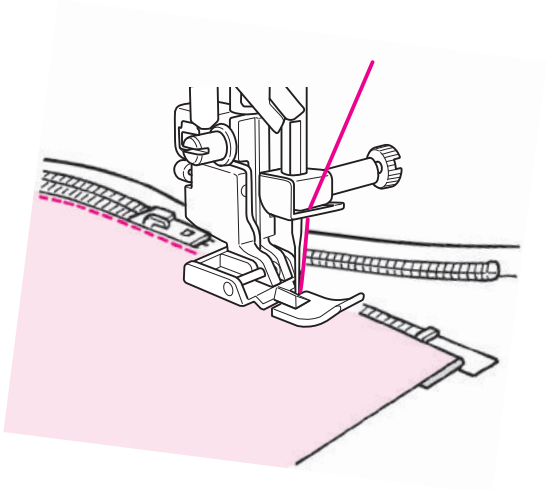

2 **Continue sewing until the top end of the slider is reached. Then, move the slider away from you, and continue sewing until the end of zippers is reached.**

7.3. Patchwork piecing

No.	Pattern
002	7
003	1/4"

Presser foot
Standard presser foot (A)

⚠ Leave the machine in Lock mode

To sew pieces of cloth together is called piecing in patchwork.
In the case of piecing, set the seam allowance generally to 7 mm or 1.4 inches for sewing.

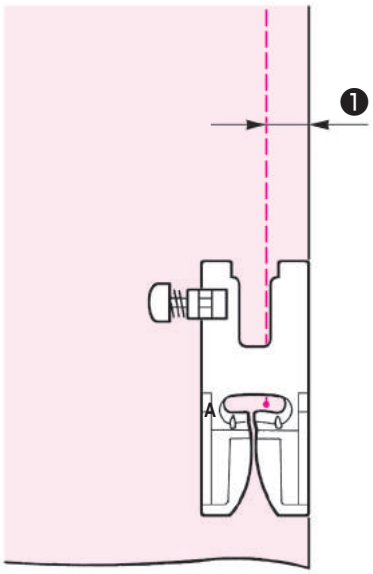

1 **Cut the fabric with seam allowance.**

2 **Align the right end of the presser foot and the edge of the fabric and sew.**

The needle will enter 7 mm (1/4") ❶ from the edge of the fabric, so the seam allowance of 7 mm (1/4") can be sewn.

7.4. Overcasting stitch

No.	Pattern
007	
022	
023	Lightweight material

Presser foot
Overcasting presser foot (C)

⚠ Leave the machine in Lock mode

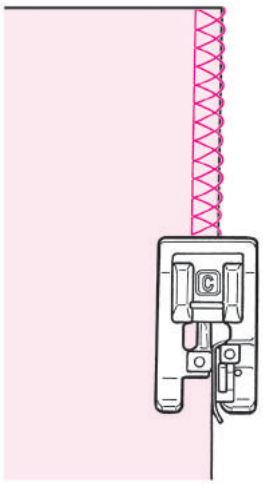

This stitch is used to prevent the edge of fabric from fraying.

Push the fabric towards the guide and sew.
If the fabric and guide are apart, it will not make a nice stitch formation. Make sure to guide the fabric along the guide and sew slowly.

* Before sewing, make sure to check that the needle will not hit the presser foot.

7.5. Blind stitch

No.	Pattern
008	
030	Lightweight material
031	Stretchy fabrics

Presser foot
Blind stitch presser foot (D)

⚠ Leave the machine in Lock mode

■ Folding fabrics

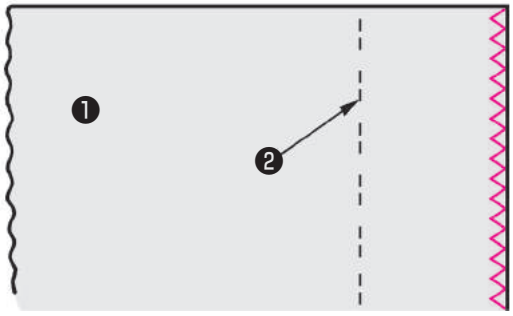

1 **Sewing overcasting stitches on the edge of fabric.**

(Refer to page 89 for overcasting stitches)

❶ Fabric (wrong side)
❷ Finish line

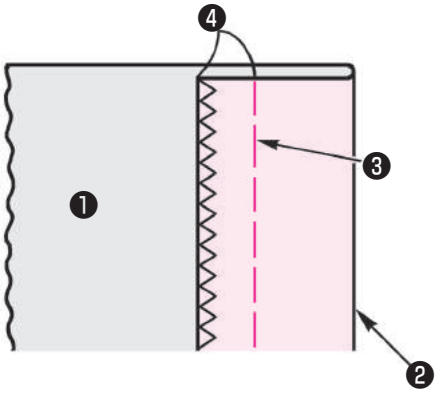

2 **Carry out basting ❸ by hand.**

❹ 0.5 - 0.6 cm

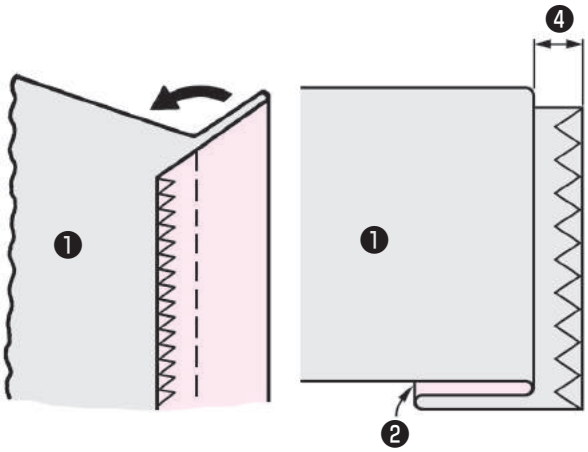

3 **Fold from basting line.**

Leave 0.5 to 0.6 cm.

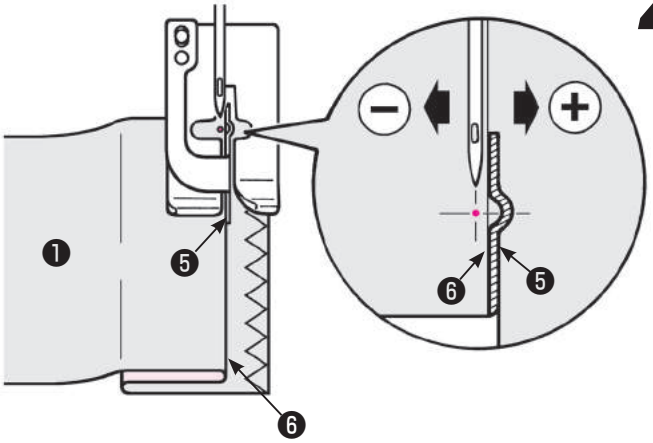

4 **Align the guide ❺ of the presser foot with the folded edge ❻ .**
Turn the hand wheel and adjust with the zigzag width adjusting dial so that stitches reach the folded edge.

*** Pay attention so that needle will not hit the presser foot.**

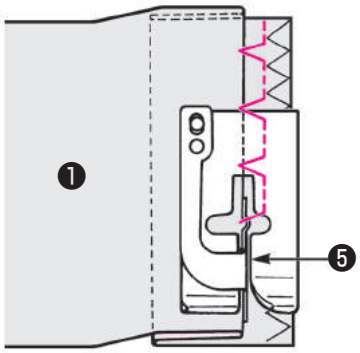

5 **Position the folded edge against the guide ❺ and sew.**

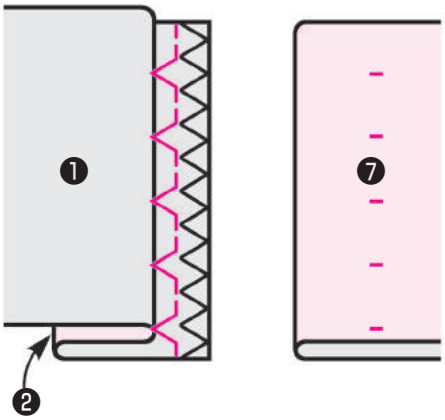

6 **Turn over the fabric after sewing.**

❼ Fabric (right side)

■ When changing the needle entry point

1. If the stitches reach too far beyond the folded edge

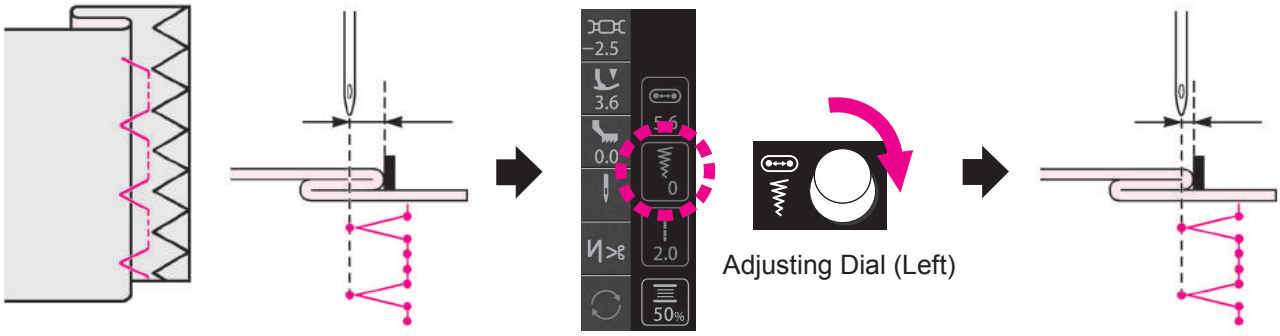

Press the zigzag width icon.
Turn the adjusting dial (left) clockwise.

(Turn the handwheel to check the needle entry point. When adjusting, make sure the needle is in the up position.)

2. If the stitches fail to reach the folded edge

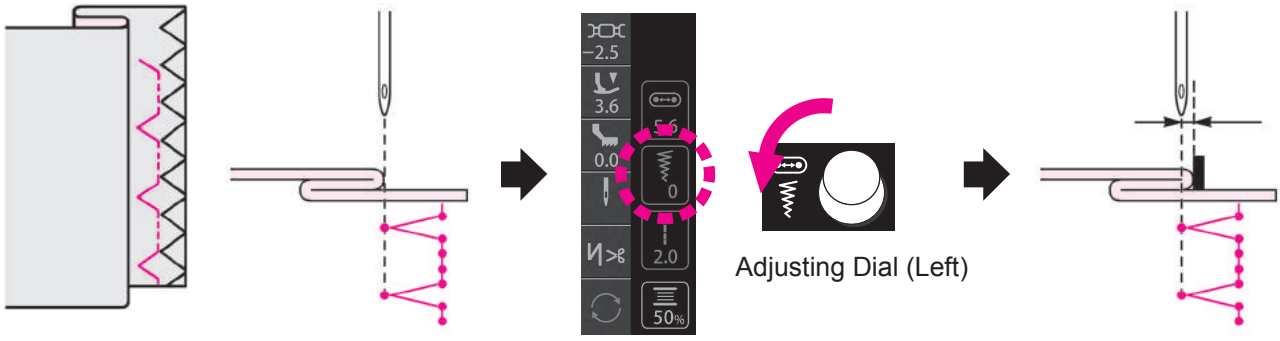

Press the zigzag width icon.
Turn the adjusting dial (left) counterclockwise.

(Turn the handwheel to check the needle entry point. When adjusting, make sure the needle is in the up position.)

7.6. Shell tuck

No.	Pattern
032	
033	

Presser foot
Manual buttonhole presser foot (I)

⚠ Leave the machine in Lock mode

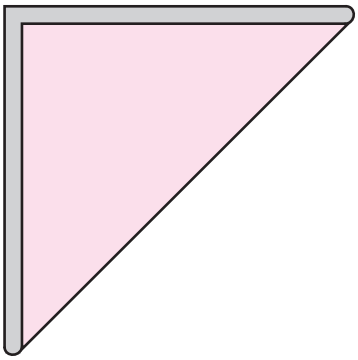

1 **Fold the material in the bias direction.**

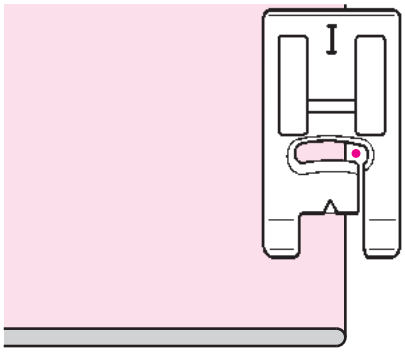

2 **Sew the material so that the needle enters the portion that is located on the right side of the top of the folds.**

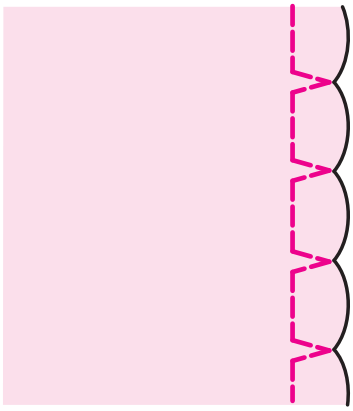

3 **The seashell-shaped tucking is produced.**

7.7. Bartacking

No.	Pattern
034	
035	MEM

Presser foot
Manual buttonhole presser foot (I)

⚠ Leave the machine in Lock mode

Bartacking is used to reinforce the part of the seam that is likely to ravel.

* The length of the bartack is determined by pushing the reverse stitch button, but it will automatically make a u-turn when it reaches the maximum of 20 stitches.
* If the presser foot cannot be parallel to throat plate, use filler fabric or cardboard.

Example of use)

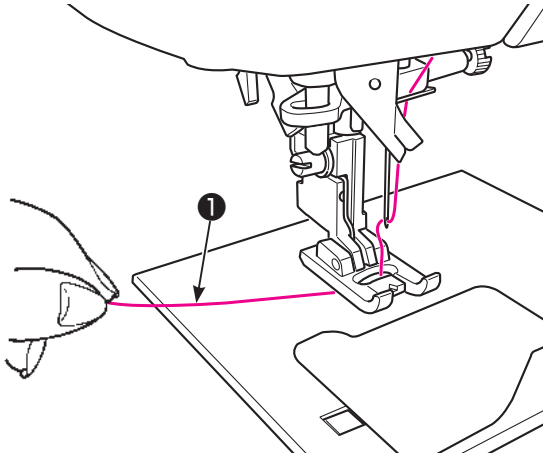

1 **Pass the needle thread through the presser foot.**

❶ 10 cm

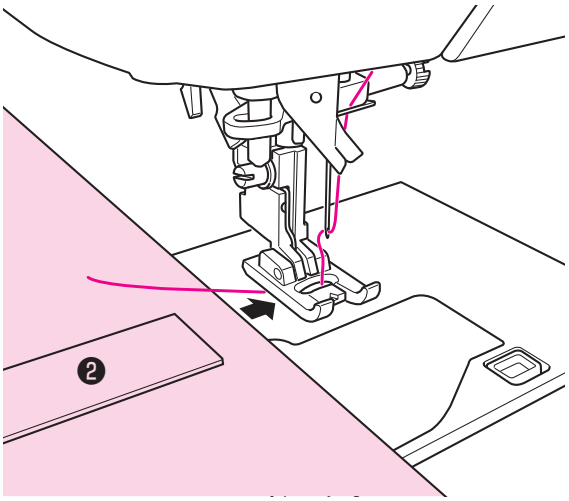

2 **Place the fabric ❷ under the presser foot.**

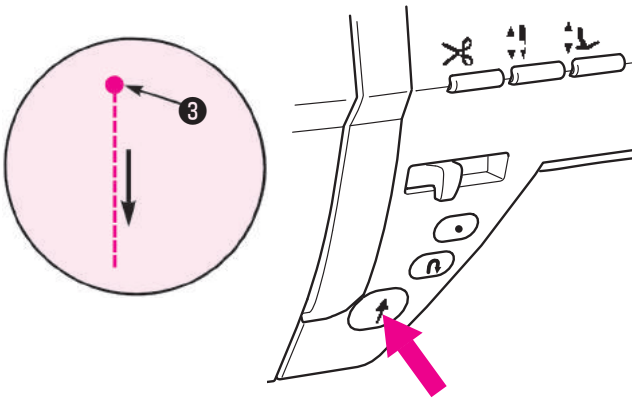

3 Start sewing.

Push the start/stop button and the machine starts to sew straight stitches.

❸ Starting point

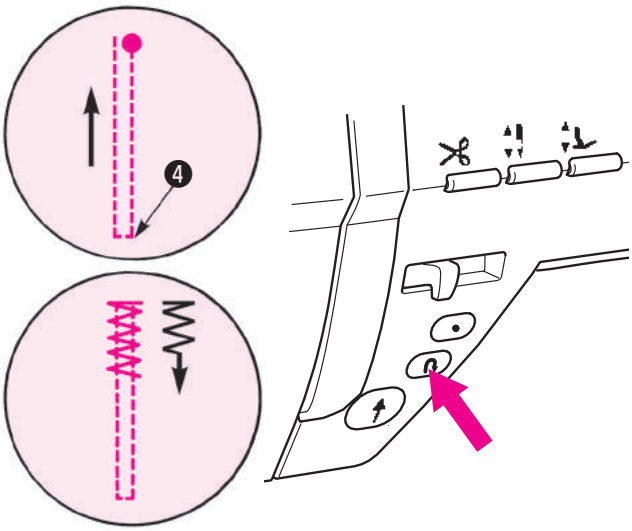

4 When it comes to the turning point ❹ push the reverse stitch button.

The machine goes back to the starting point by sewing straight stitches and then it sews zigzag stitches to the point where the reverse stitch button is pushed.

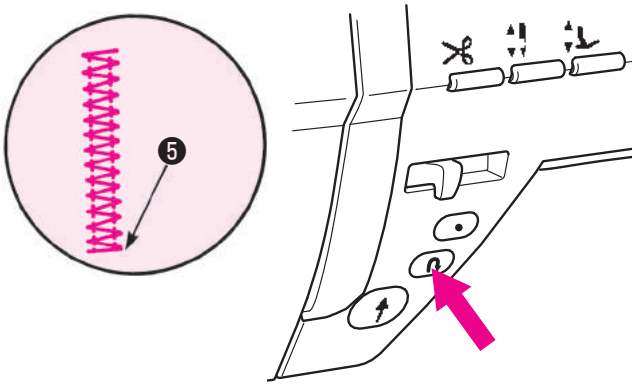

5 When the machine comes to the sewing end point, push the reverse stitch button.

The machine sews lock stitches ❺ and stops.

MEM

* **No. 035 In the case of bartacking (memory)**

Since the length of a bartack that is sewn for the first time is stored in memory, step of procedure *4* is not required for bartacking for the 2nd time and beyond.

If you want to change the bartack length stored in memory, any other pattern should be selected.

7.8. Eyelet

No.	Pattern
038	
039	
040	

No.	Pattern
041	
042	

Presser foot
Manual buttonhole presser foot (I)

⚠ Leave the machine in Lock mode

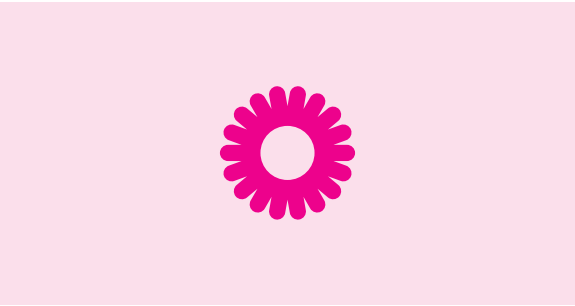

1 **Sew an eyelet.**

The sewing machine automatically performs lock stitching at the end of sewing and stops.

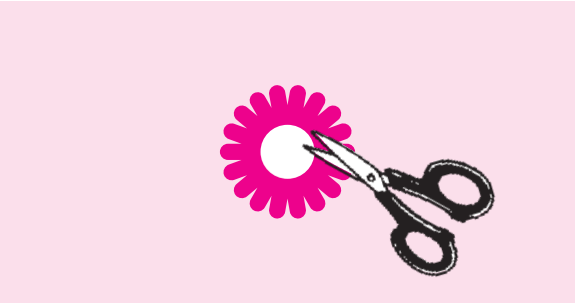

2 **Open a hole with an eyelet punch or a pair of scissors.**

This hole can be used for passing a string or ribbon or as a flower hole.

7.9. Decorative stitches

No.	Presser foot
101~290 301~394 Letters, etc.	Manual buttonhole presser foot (I)

⚠ Leave the machine in Lock mode

* Refer to page 70 for the type of pattern.

■ Preparation before sewing

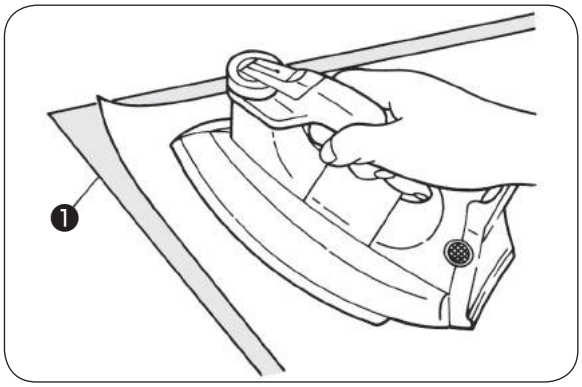

In order to beautifully sew a pattern on light-weight material ❶ , trial stitching is necessary while sticking a piece of interlining on the wrong side of the material.

Use an iron to attach a fusible interlining to the wrong side of fabric.

* If stitch length is excessively short, the bobbin thread may appear on the right side of material or may cause stitch gathering.
Be sure to adjust the darning and carry out trial stitching.

Darning adjustment

Try trial sewing, adjust while checking the pattern.
(Refer to page 55)

■ How to stitch a pattern (letters)

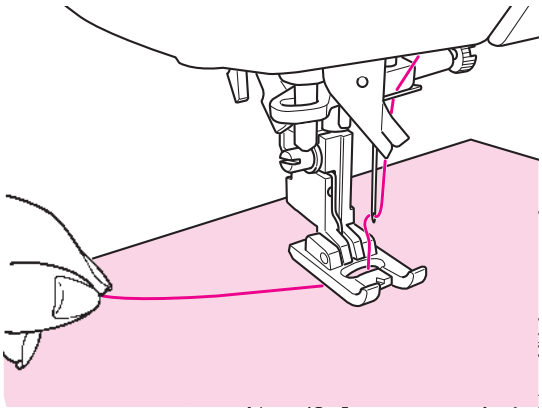

Pass down the needle thread through the presser foot hole and draw it sideways. Place the fabric underneath the presser foot and start.

The machine will stop automatically when sewing is finished.

* **Note that the sewing speed varies according to stitch patterns (letters) to be sewn.**
* **If the automatic thread trimmer is used while sewing, the machine starts to sew from the beginning.**
* **In case of condensed sewing, if the stitch length is too small, the stitches may get stuck.**

■ Disposing thread ends of jump stitches

Get rid of unnecessary thread on the front side of fabric by scissors.

7.10. Lace / feather patterns

No.	Pattern	No.	Pattern	No.	Pattern	No.	Pattern
198		202		206		363	
199		203		207		364	
200		204		208		365	
201		205		362			

Presser foot
Manual buttonhole presser foot (I)

⚠ Leave the machine in Lock mode

Lace- / feather-like patterns can be produced by sewing patterns in parallel.

■ How to sew a combination of patterns

- **For sewing pattern Nos. 198 and 199 in combination**

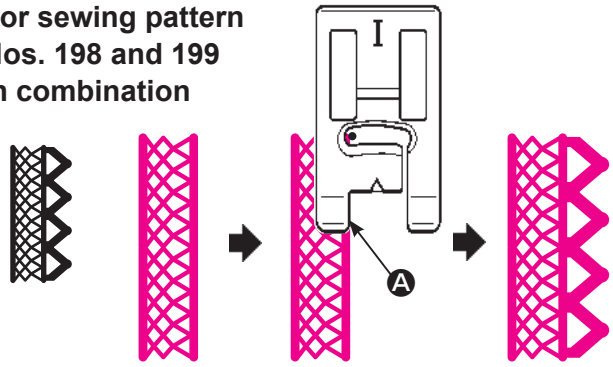

① Sew the pattern No.198.

② Select the pattern No. 199. Sew the pattern No. 199 while aligning the inner edge of the presser foot with the edge of the pattern (Ⓐ).

- **For sewing pattern Nos. 207 and 208 in combination**

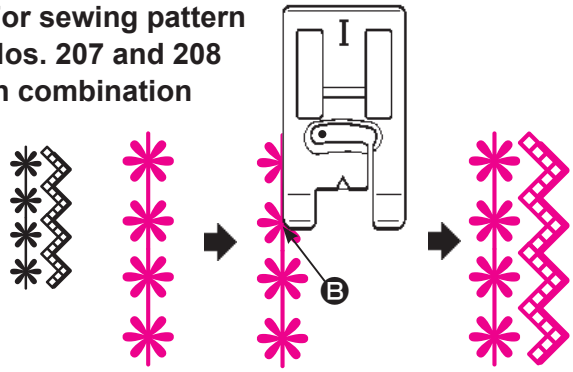

① Sew the pattern No.207.

② Select the pattern No. 208. Sew the pattern No. 208 while aligning the outer edge of the presser foot with the center line of the pattern (Ⓑ).

Example)

No.198+199

200+201

203◿◺+202+203

204+205+206

207+208

No. 362◿◺+362

363◿◺+363

364◿◺+364

365◿◺+365

7.11. Scallop stitches

No.	Pattern	No.	Pattern	No.	Pattern	No.	Pattern
280		283		286		289	
281		284		287		290	
282		285		288			

Presser foot
Manual buttonhole presser foot (I)

Leave the machine in Lock mode

This stitch is used for decorating edging on items such as table cloths, collars on blouse, etc.

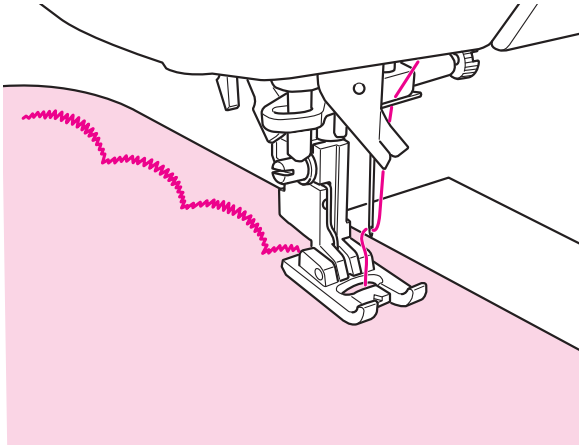

1 **To keep the pattern intact, leave some margin and sew on the edge of the cloth.**

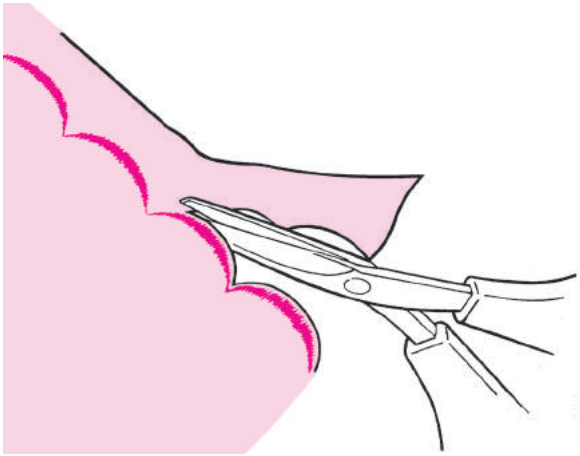

2 **Cut the sewn fabric carefully so that stitches are not cut by the scissors.**

Elongation

The length of the patterns can be adjusted.
(Refer to page 80)

7.12. Random pattern

No.	Pattern
302	
304	
306	
308	

No.	Pattern
313	
315	
317	
319	

No.	Pattern
321	
323	
325	
327	

No.	Pattern
329	
331	
333	

Presser foot
Manual buttonhole presser foot (I)

Leave the machine in Lock mode

Example)

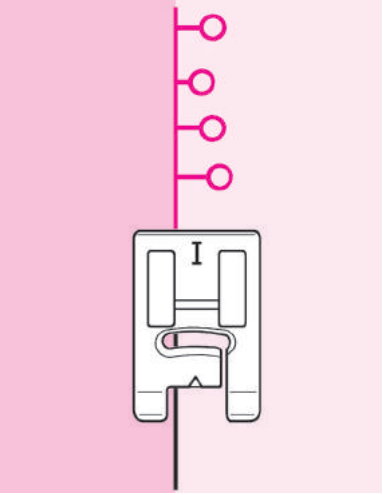

When sewing random stitch patterns, the zigzag width automatically changes by section. This means that the finished patterns provide a sense of fun.

7.13. Tapering

No.	Pattern	No.	Pattern	No.	Pattern
339		341		343	
340		342		344	

Presser foot
Manual buttonhole presser foot (I)

⚠ Leave the machine in Lock mode

For the pattern Nos. 339 to 344, zigzag width gradually increases at the start of sewing the patterns and gradually decreases at the end of sewing. These patterns are used for overcasting appliqué, etc.

■ How to sew the pattern

❶ Select the pattern and start the sewing machine.

The zigzag width gradually increases.

When the preset zigzag width is reached, the sewing machine continues sewing with that zigzag width.

❷ Press the lock stitch button at the end of sewing.

For the same sewing length with the start of sewing, the zigzag width gradually decreases. The sewing machine sews lock stitches and automatically stops.

Example of use)

Appliqué of a leaf

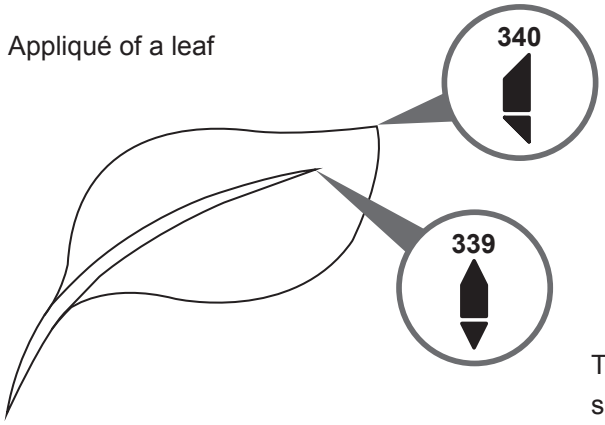

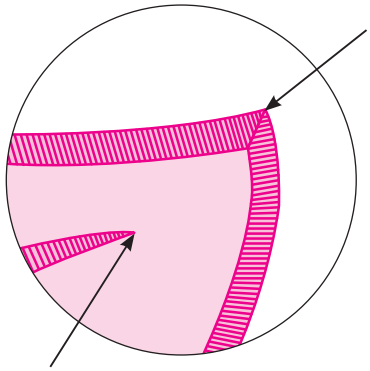

Select the figure of “Size” so that the degree of angles of stitches at the joining point of the stitches at the start and end of sewing are aligned.

The more the figure of “Size” increases, the sharper angle of degree of stitches will be.

■ Changing the tapering size

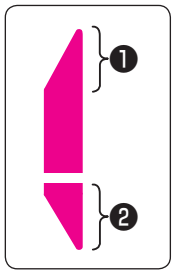

It is possible to change the size of tapering sections (❶ , ❷) according to the product you want to sew.

Setting range: “×1” - “×5”
* Initial value has been factory-set to “×3”.

1. Invert the pattern. Then, press .

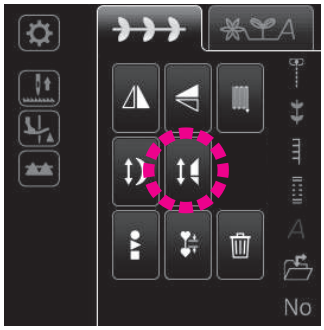

2. Press .

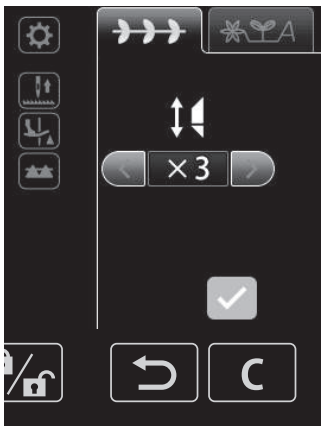

3. Select the size of tapering.

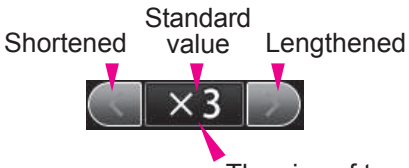

The size of tapering will be returned to its initial value by pressing the blue frame.

The initial value is also restored by pressing C .

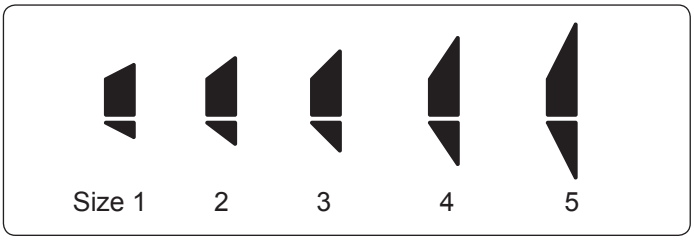

The set value is confirmed by pressing .

7.14. Hand look quilt stitches

No.	Pattern
391	

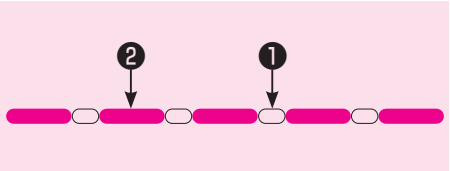

Handsewn look seams can be sewn by using a transparent thread as the needle thread.

❶ Needle thread
❷ Bobbin thread

7.15. Buttonhole stitches

* **The buttonhole length is automatically determined only by placing a button on the buttonhole presser foot.**
* **The machine can sew buttonholes for buttons with diameters of 0.7 - 3.2 cm.**
* **In case of stretchy fabrics, use non-elastic interlining on the wrong side of the fabric.**
* **Make sure to perform test sewing to see that the machine sews buttonholes correctly.**
* **Buttonhole Nos. 414 - 417 are for knit fabrics and should be used with a knit needle.**

Presser foot
Buttonhole presser foot (E)

⚠ Leave the machine in Lock mode

No.	Pattern		Application
401		Standard buttonhole	Buttonhole for medium to heavy weight materials Standard buttonhole
402		Standard buttonhole	Manual 2-step buttonhole Use this buttonhole, when there is an overlapped section in the fabric or when you want to sew larger buttonhole than 3.2 cm diameter. (Refer to page 110)
403	MEM	Standard buttonhole	Manual 2-step buttonhole (Memory) * It is possible to store the size of buttonhole you have sewn once in memory.
404		Standard buttonhole	Buttonhole for heavy weight materials Stitch density is coarse. This pattern is used for coats, etc.
405		Standard buttonhole	Sews buttonhole double
406		Decorative	Decorative buttonholes
407		Rounded end	Buttonholes for women's blouses and children's clothes. Also for light weight materials
408		Rounded end	
409		Rounded end	

No.	Pattern		Application
410		Keyhole	Keyhole buttonhole for heavy weight materials such as suits, jackets, coats, etc.
411		Keyhole	Round keyhole
412		Keyhole	Large and thick keyholes for heavy weight materials
413		Keyhole	For sewing buttons on the front plackets of pants, etc.
414		For knit	Buttonhole for light weight knit (also used as decorative buttonhole)
415		For knit	Buttonhole for medium weight knit (also used as decorative buttonhole)
416		For knit	Buttonhole for light weight knit Sews buttonhole double
417		For knit	Buttonhole for medium weight knit Sews double buttonhole
418		Decorative	Decorative buttonholes Decorative buttonhole which look like hand-sewn
419		Decorative	
420		Decorative	
421			Basting stitch for buttonholing (Refer to page 109)

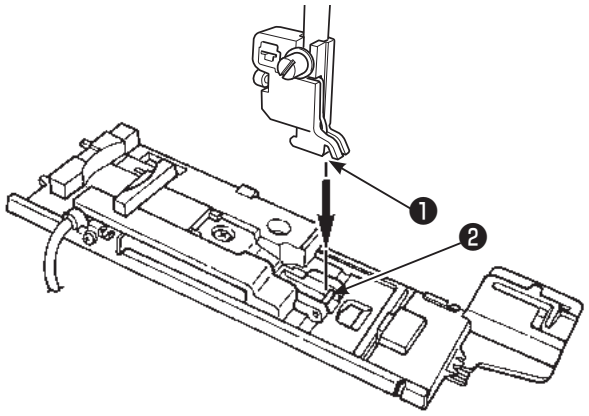

1 Set the presser foot.

Lift the needle and lift the presser foot.
Align the groove ❶ of the presser foot holder with the ❷ of the presser foot and lower the presser foot holder to set.

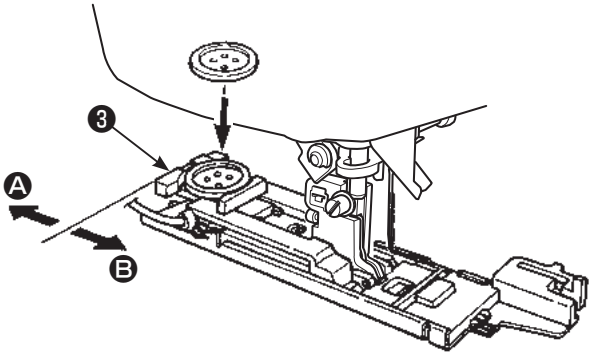

2 Set the button.

Pull the button holder ❸ toward Ⓐ, place the button on the button holder, and then push the holder toward Ⓑ to set the buttonhole length.

*** Check the following points after setting the presser foot and then start to sew buttonholes.**

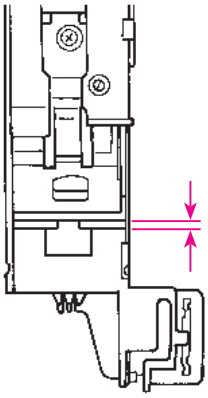

Check that there is a clearance.

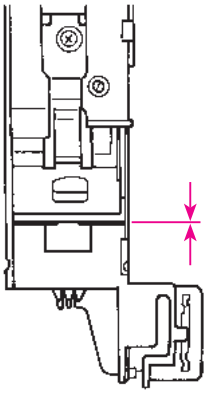

If there is not a clearance, the machine will not sew neat stitches.

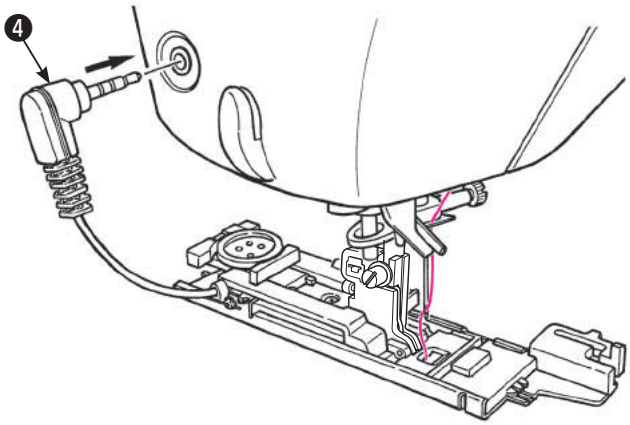

3 Set the buttonhole sensor pin ❹ .

Insert the sensor pin into the sensor pin hole at the face plate cover.

* <u>**Insert the pin into the hole completely.**</u>

* **If the machine starts to sew without inserting the pin into the hole, the following message will be shown on the display.**

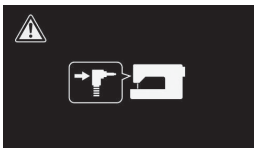

Set the sensor pin and restart.

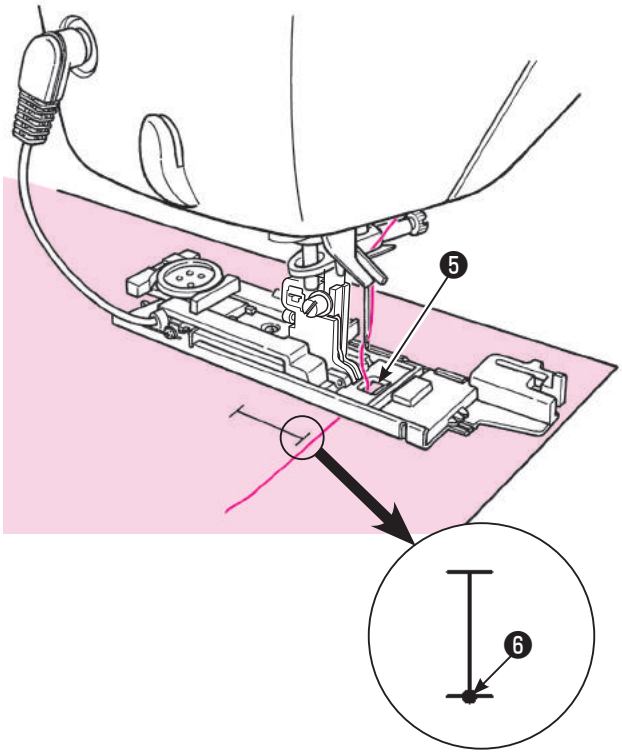

4 Place the fabric under the presser foot.

Raise the presser foot, pass the needle thread through the hole on the presser foot ❺ and pull it out sideways.
Place the fabric under the presser foot, align the marking with the sewing-start point ❻ . Penetrate the needle into the fabric by turning the hand wheel and lower the presser foot.

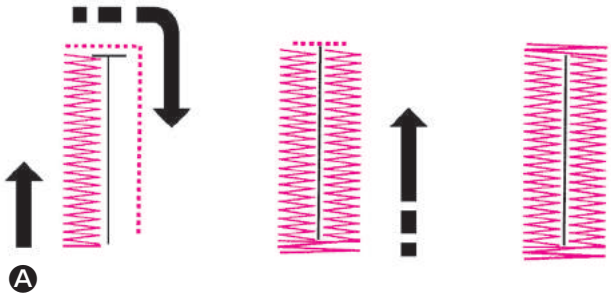

5 Start sewing. Ⓐ

The machine will stop automatically after sewing the buttonhole.

* **If a buttonhole of the same size will be sewn again, push the thread trimming button to trim the threads and raise the presser foot. Under this condition move to another point, lower the presser foot and then start sewing.**
* **Do not change stitch length and/or zigzag width during buttonholing. Otherwise this will cause imbalanced stitches.**
* **If thread trimming button is pushed while sewing buttonhole, the machine will stop and will not complete the buttonhole.**

* Depending on material to be sewn and weaving direction of the material, there might be a slight difference in zigzag widths between right and left lines of buttonholes. Test sewing is recommended.

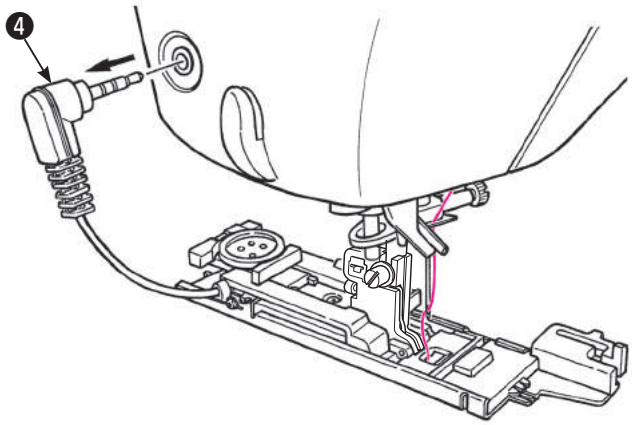

6 Unplug the sensor pin ❹ after sewing.

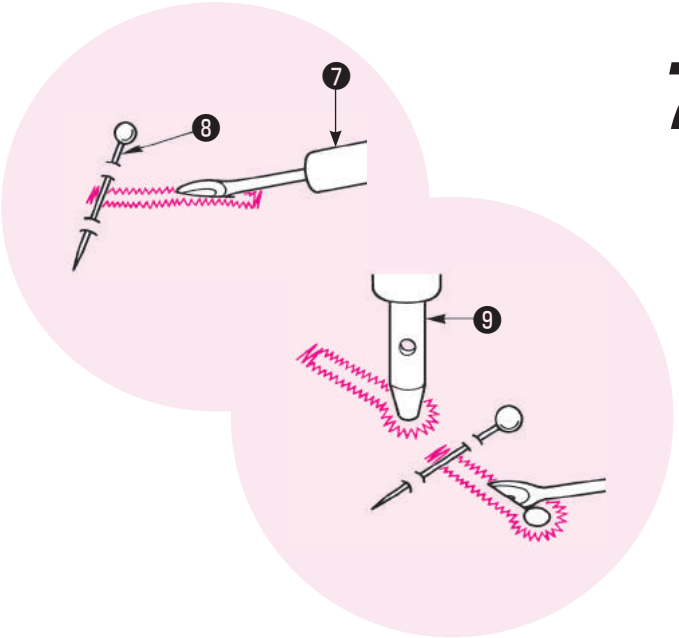

7 Opening the buttonhole using a ripper ❼ .

[Double bartack]
Pierce a stopper pin ❽ at the bartack and open the buttonhole with a ripper ❼ . Be careful not to cut the stitches.

[Keyhole buttonhole]
Place a cardboard under the buttonhole and make a hole with the eyelet punch ❾ . Then pierce a stopper pin at the bartack and open the buttonhole with a ripper.

● Buttonhole clamping plate

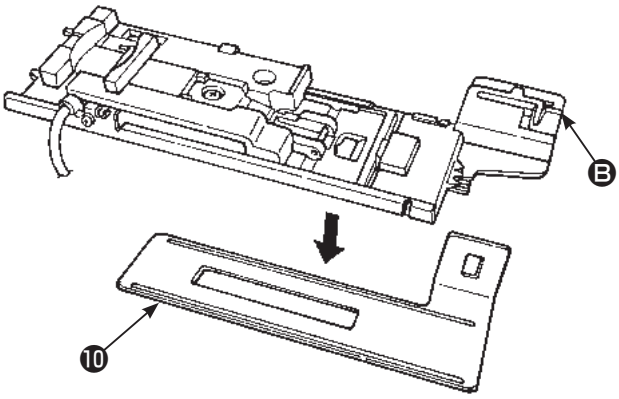

⚠ Leave the machine in Lock mode

It will be easier to sew buttonholes on the thin fabrics and/or near the overlapped sections, if the clamping plate is used.

1. **Attach the buttonhole presser foot to the presser foot holder, with the clamping plate ❿ together.**
2. **Place the fabric between the presser foot and the clamping plate.**

* You can remove the clamping plate by holding Ⓑ.

■ When changing the width of the buttonhole

Press the zigzag width icon.
Turn the adjusting dial (left).

> * **The setting of the buttonhole width and stitch length will be cancelled when the power is shut down or another pattern is selected.**

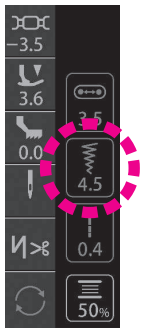

Turn to the left

The width becomes narrow

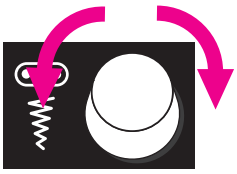

Adjusting Dial (Left)

Turn to the right

The width becomes wide

Narrow

Wide

■ When changing the density of the seam

Turn the adjusting dial (right).

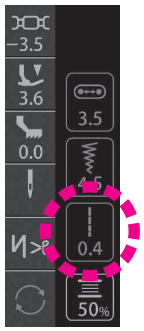

Turn to the left

Stitch density becomes denser

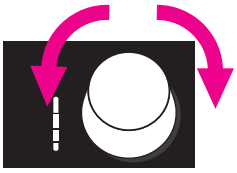

Adjusting Dial (Right)

Turn to the right

Stitch density becomes more coarse

Narrow stitches

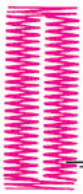

Narrow

Large stitches

Larger

■ Change of seam width of buttonhole

The seam width of buttonhole is changeable.

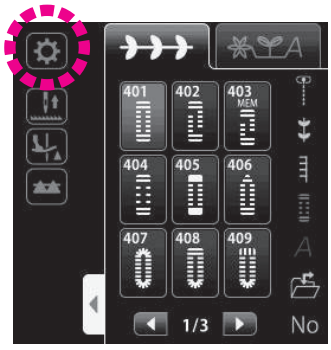

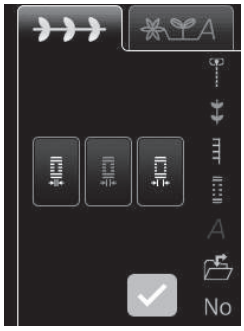

Seam width

Small Standard Large

* Initial value has been factory-set to “Standard”.

The set value is confirmed by pressing .

■ Buttonhole with gimp

No.	Pattern	Presser foot
401		Buttonhole presser foot (E)

⚠ Leave the machine in Lock mode

Buttonholes with gimp thread prevent the buttonholes from stretching and can make them more secure.

*** A buttonhole with gimp thread should be sewn using the double bartack pattern (Pattern No.401)**

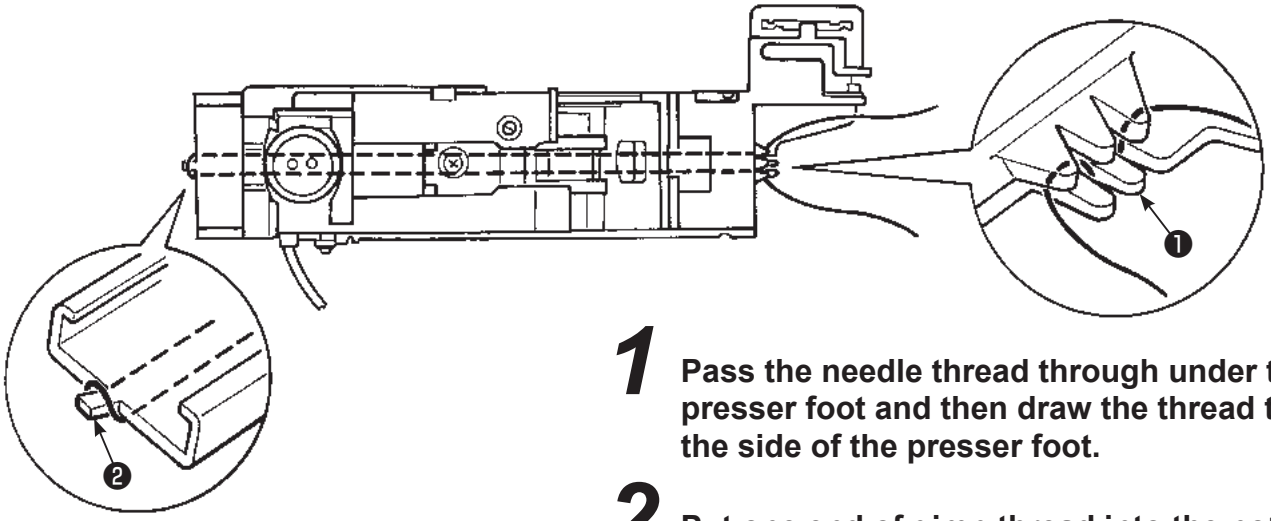

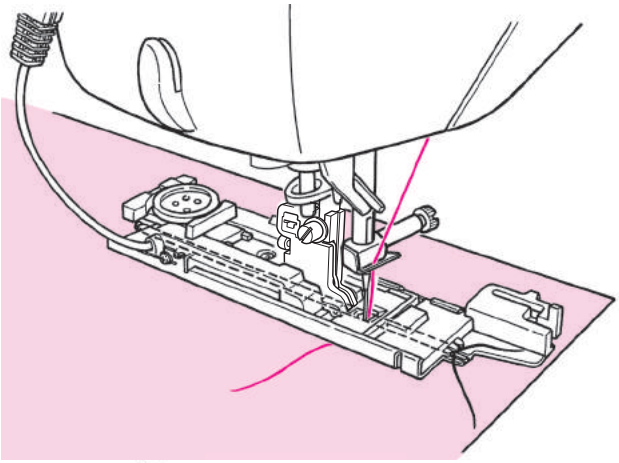

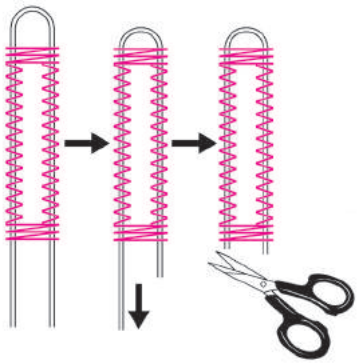

1 **Pass the needle thread through under the presser foot and then draw the thread to the side of the presser foot.**

2 **Put one end of gimp thread into the notch ❶ at the front right side of buttonhole presser foot, pull the gimp thread under the presser foot and thread it at the hook ❷ of the presser foot.**

3 **After threading at the hook, pull the gimp thread back under the presser foot and put it into the notch at the front left side of the presser foot firmly.**

4 **Bring down the needle to the sewing start point and lower the presser foot.**

5 **Sew the buttonhole.**

6 **Pull the left gimp thread to take off slack and cut excess gimp thread.**

■ Basting stitch for buttonholing

No.	Pattern
421	

This stitch is used as basting for Pattern No. 401 Buttonholing.
It is also applicable to welt-buttonholing.

7.16. Manual 2-step buttonhole

No.	Pattern
402	
403	MEM

Presser foot
Manual buttonhole presser foot (I)

⚠ Leave the machine in Lock mode

* **Refer to page 108 when you want to change the zigzag width and stitch length of a buttonhole.**

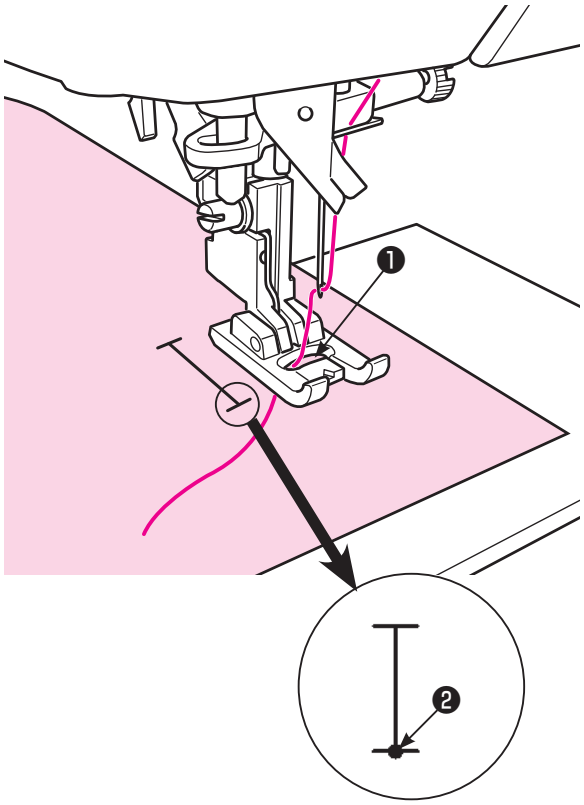

1 **Set the manual buttonhole presser foot (I).**

2 **Pass the needle thread through the hole of the presser foot ❶ and pull it out sideways together.**

3 **Bring down the needle on the sewing start point ❷ and lower the presser foot.**

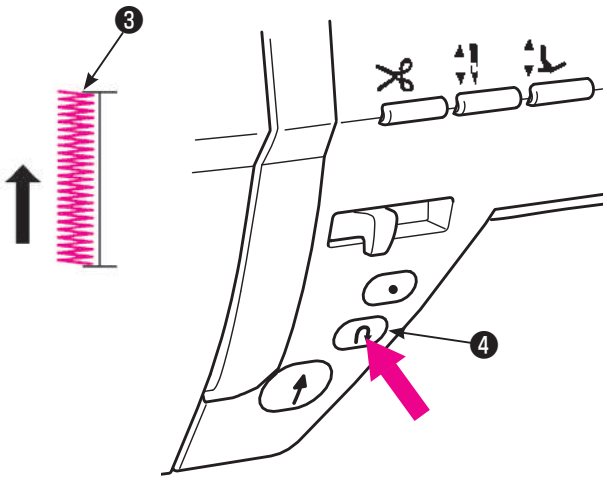

4 **Push start/stop button to sew.**

* At this time, if the start/stop button is pushed, the machine will stop sewing. And if the start/stop button is pushed again, then the machine will continue to sew the left side of the buttonhole.

Push the reverse stitch button ❹ when it reaches the necessary length ❸ of the left side of the buttonhole.
Sew bartack and the right side of the buttonhole, then the machine sews bartack and right side of the buttonhole.

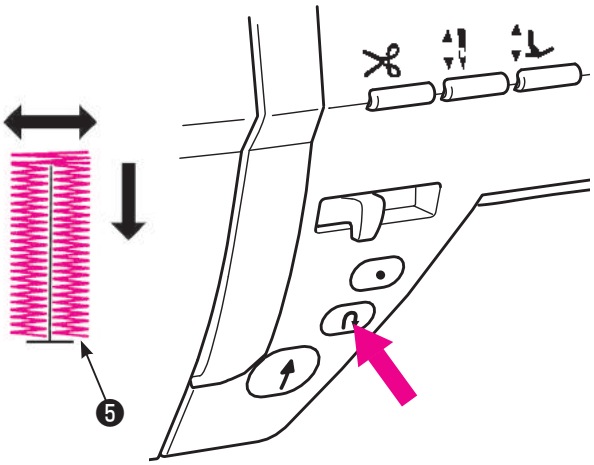

5 **Push reverse stitch button when it comes to the sewing start point ❺ .**

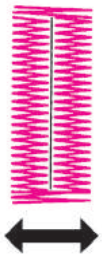

6 **Sew bartack and lock stitches until the machine stops automatically.**

Trim the thread. Lift the presser foot. Then, remove the material from the sewing machine.

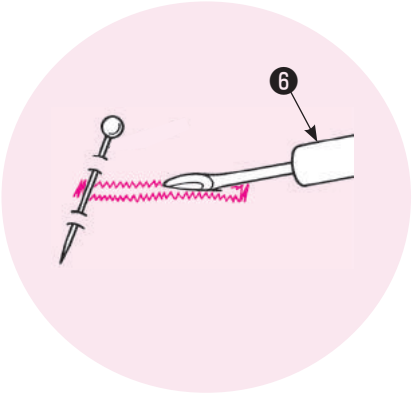

7 **Pierce a stopper pin at the bartack and open the buttonhole with a ripper ❻ . Be careful not to cut the stitches.**

* **In the case of a 2-step buttonhole, sewing direction of the left and that of the right side is different. Due to this and according to fabrics to be sewn, it may be possible that the density of each side looks different.**

MEM

* **No. 403 In the case of 2-step buttonhole (Memory)**

Since the length of a buttonhole that is sewn for the first time is stored in memory, step of procedure *4* is not required for buttonhole for the 2nd time and beyond.

If you want to change the buttonhole length stored in memory, any other pattern should be selected.

7.17. Sewing buttons

No.	Pattern	Presser foot
422	⊖	Manual buttonhole presser foot (I)

⚠ Leave the machine in Lock mode

* **Do not use the automatic thread trimming function when sewing buttons.**

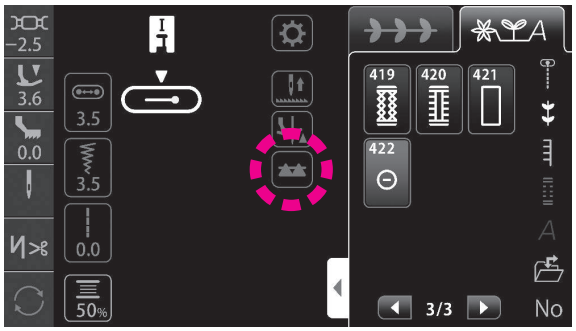

1 **Press the feed dog icon to lower the feed dog.**

: Feed dog is engaged

: Feed dog is disengaged

Example)

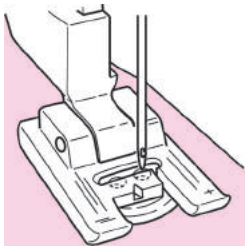

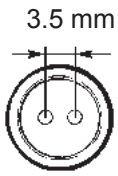

2 **Place a button under the presser foot and adjust the zigzag width according to the distance between holes in button.**

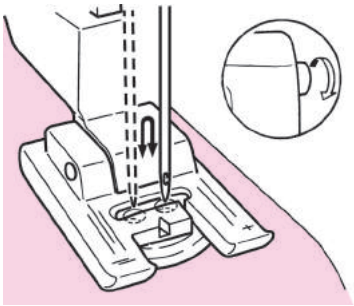

3 **Make sure that needle enters holes in button, by turning hand wheel manually.**

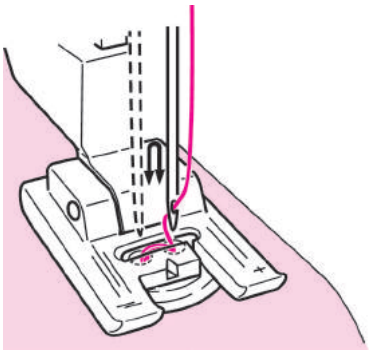

4 **Carry out sewing while turning the handwheel by hand.**

⚠ If you pull the material, the button could be moved from the correct position causing needle breakage. Buttons can be sewn without fail by using the separately-available button sewing presser foot (refer to page 120).

5 **Trim needle and bobbin threads by about 10cm (4 inches) long after sewing. Make a knot to secure the stitches.**

7.18. Quilting (free motion)

No.	Pattern	Presser foot
001		Quilt presser foot (for the ruler) (Q)

⚠ Leave the machine in Lock mode

* **Be sure to sew straight stitch pattern (center stitch base).**

In the case of performing free-motion stitching using a zigzag pattern, the separately-available quilt presser foot (zigzag type) and presser foot joint are necessary.

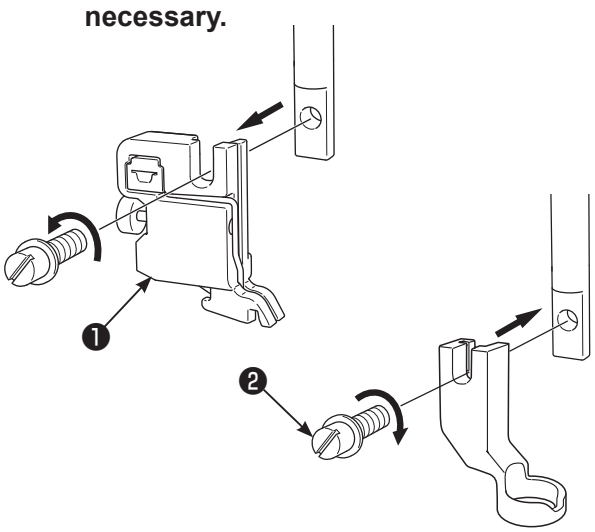

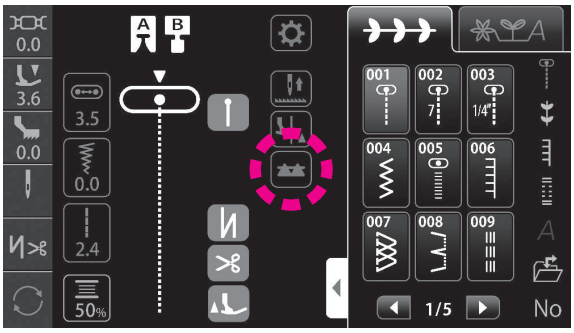

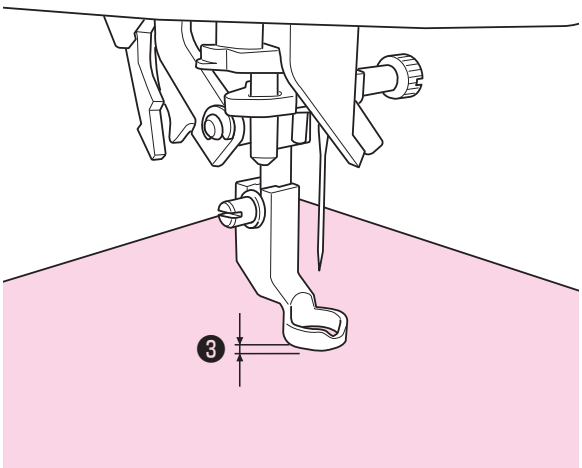

It is called free motion quilting when moving the fabrics freely towards any directions without using the feed dog of sewing machine.
Free curve seams, etc. can be produced with the feed dog lowered (drop feed) regardless of the direction of sewing (i.e., 360 degrees) by moving the material by hand.

1 Put top layer of fabric with patchwork and/or appliqué, quilting cotton and bottom fabric together by using pin or basting stitches.

2 Assemble the quilt presser foot.

Raise the presser bar. Loosen the setscrew for presser foot holder and remove the presser foot holder ❶ . (Refer to page 20)
Set the quilting foot and tighten the setscrew ❷ for presser foot.

3 Press the feed dog icon to lower the feed dog.

: Feed dog is engaged

: Feed dog is disengaged

4 Place the fabric underneath the presser foot and lower the presser foot.

5 Adjust the presser foot height according to the material thickness.

- Height of the presser foot can be changed with the presser foot screw.
- It is also possible to adjust the presser foot height using the micro-lifter height setting function.

  Adjust the presser foot height with .

  The set value is confirmed by pressing .

The material can be moved smoothly with no resistance by adjusting the presser foot height to about 1 mm ❸ above the material.

* The sewing machine is capable of sewing beautifully even multi-layered sections of material by decreasing the presser foot pressure.

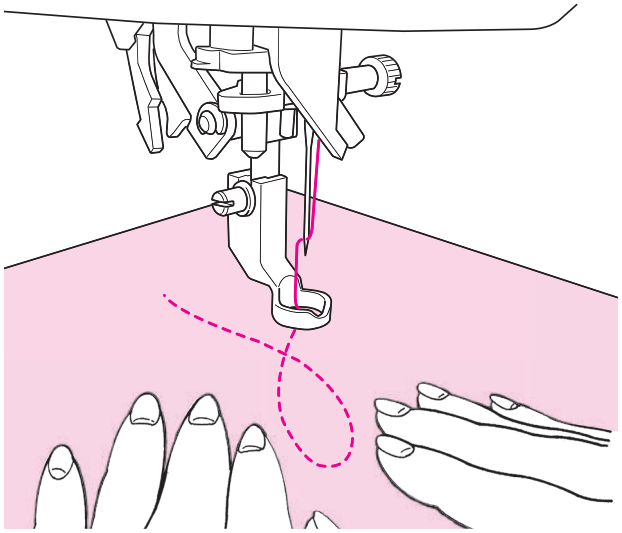

6 **Use both hands to hold the fabrics and move it without letting it loose.**
The target stitch length is about 1.5 to 2.0 mm.

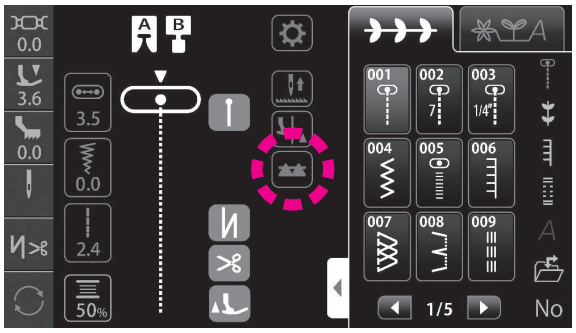

7 **Press the feed dog icon to lift the feed dog after you have completed free-motion stitching.**

The feed dog will be up and engaged at the same time as the machine starts to sew.

*** The quilt ruler is also applicable.**

Tips

● How to lock stitches

- At sewing start, pull up the bobbin thread on the top layer of the fabric, hold both needle and bobbin threads together and sew 3 stitches on the same point. After that move fabrics as you wish.
  In this way, stitches on the wrong side of the fabrics look neat.
- At sewing-end sew 3 stitches on the same point and stop.

● How to sew stitches with the same stitch length

- When the foot controller is used, the fabrics can be guided by both hands and you can move the fabrics freely.
- Set the speed controller to medium or medium low first, press the foot controller completely and move the fabrics.
  → if stitches become too large, set the speed controller to “faster”
  → if stitches become too small, set the speed controller to “slower”.

7.19. Quilting (quilt guide)

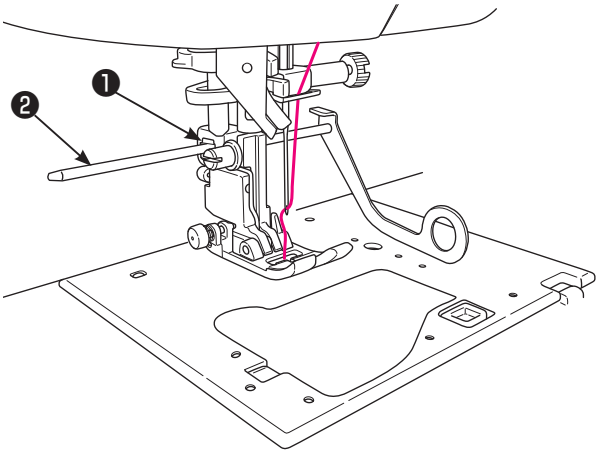

1 **Insert the quilt guide ❷ into the groove of the presser foot holder ❶ .**

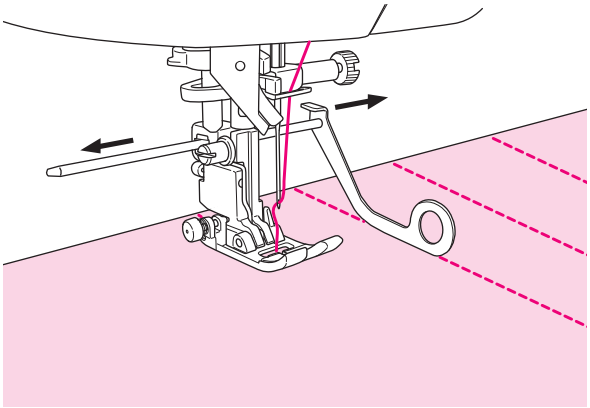

2 **Sew while tracing the stitches with the tip of the quilt guide.**

Distance between sewing lines can be adjusted freely.

8. Message catalog

* The message is turned OFF by carrying out the operation which corresponds to the message or pressing ✓ .

	Message		Cause (Reason to display such messages)
	Pictograph	English	
1		Same as the left	When the sewing machine starts up, or when the needle moves. The needle is moved by pressing ✓ . Then, the initial screen is displayed.
2		Resume Last Pattern?	In the case the retaining of the previous pattern is set in the optional startup settings.
3		Overwrite ?	When attempting to overwrite the existing pattern saved in a folder with another pattern.
4		Same as the left	In the case the deletion of the pattern in the folder is attempted.
5		Setting completed.	In the case the setting of pattern is changed in the optional settings.
6		Change setting. Check the needle. Delete the previously selected patterns.	When changing the 1-needle mode to the 2-needle mode.
7		Change setting. Check the needle.	When changing the 2-needle setting to the 1-needle setting.

	Message		Cause (Reason to display such messages)
	Pictograph	English	
8	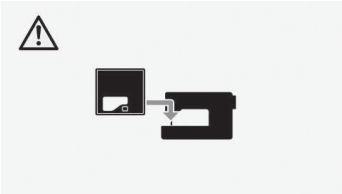		In the state the throat plate slips out of position / throat plate is removed.
9	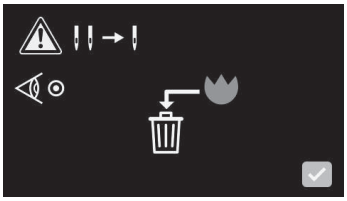	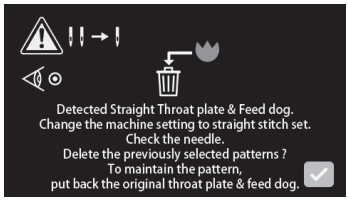	In the case the throat plate and feed dog for straight stitch are attached while the 2-needle setting is effective.
10	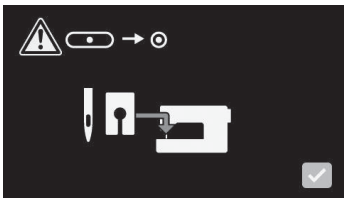	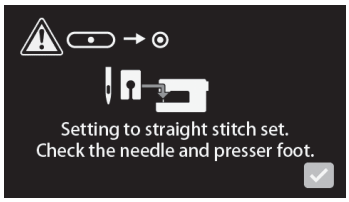	This pictograph is displayed when is pressed on No. 9 screen.
11			This pictograph is displayed when changing the 1-needle setting/standard type to the straight stitch type.
12	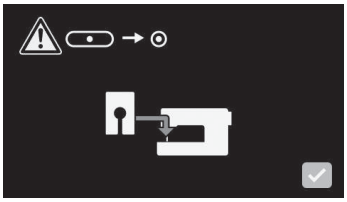	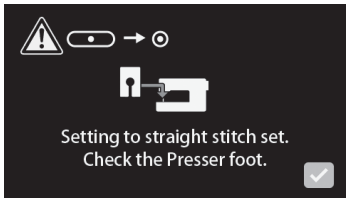	This pictograph is displayed when is pressed on No. 11 screen.
13	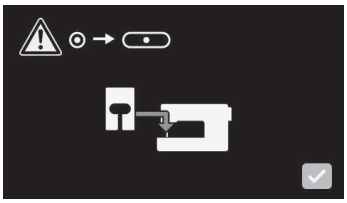	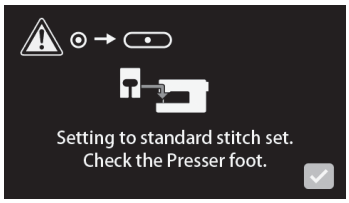	This pictograph is displayed when changing the 1-needle setting/straight stitch type to the standard type.
14			This pictograph is displayed when the Clear button is pressed after Select-all button.
15	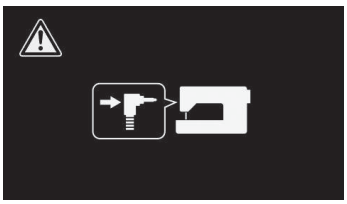	Same as the left	When one of the buttonhole stitches is selected and the buttonhole sensor pin is not connected, the machine starts to sew.

	Message		Cause (Reason to display such messages)
	Pictograph	English	
16		Same as the left	When a stitch pattern other than buttonholes is selected but the buttonhole sensor pin is connected, the machine starts to sew.
17		Lower presser foot.	This pictograph is displayed when the safety device is activated while the presser foot goes up.
18		Memory is full. Delete data and save again.	This pictograph is displayed when no more data can be stored in memory.
19		Same as the left	In the case the motor locks or the safety device works to temporarily stop the machine.
20		Reset setting to default.	This pictograph is displayed when “delete all settings” is selected from the optional functions.
21		Connecting. Do not disconect the USB device. Do not turn off the machine.	This pictograph is displayed during external communication (with USB thumb drive etc.)
22		Saving. Do not turn off the machine.	This pictograph is displayed during internal communication (for saving data)
23		Return the upper feed dog to its original position.	This pictograph is displayed when “JUKI Smart Feed” detection sensor detects while the pattern which cannot be sewn with “JUKI Smart Feed”.

9. Machine Maintenance

When lint and/or dirt has built up, it may cause machine failures. Therefore, clean the machine frequently.

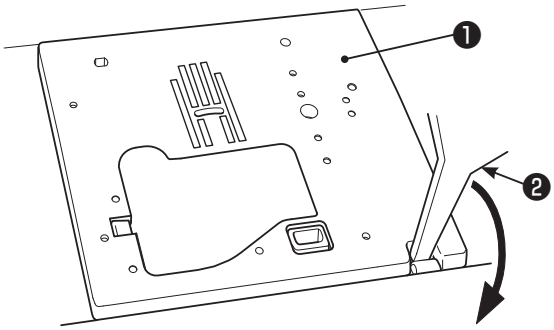

⚠ Turn off the machine or leave the Machine in Lock Mode

1 Remove needle and presser foot. Remove the throat plate.

Push the exclusive screw-driver ❷ into the groove in front of the throat plate ❶ and press the screw-driver downward to remove the throat plate.

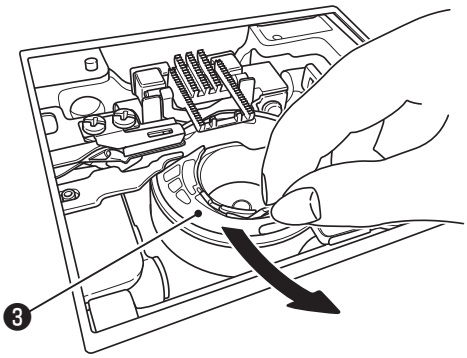

2 Remove the bobbin case holder ❸ .

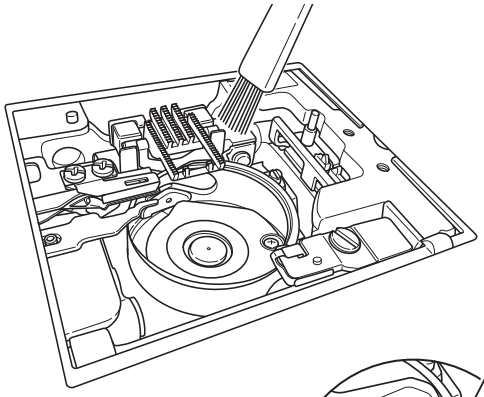

3 Remove lint and dirt.

Remove lint and dirt around the feed dog and bobbin case holder with the cleaning brush.

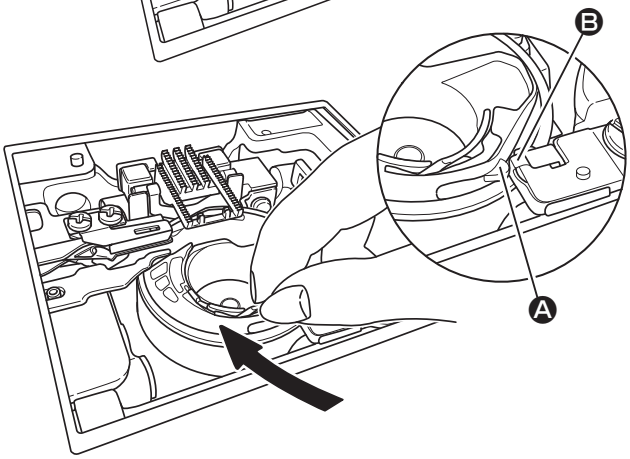

4 Install the bobbin case holder.

Install the bobbin case holder so that points Ⓐ and Ⓑ touch each other.

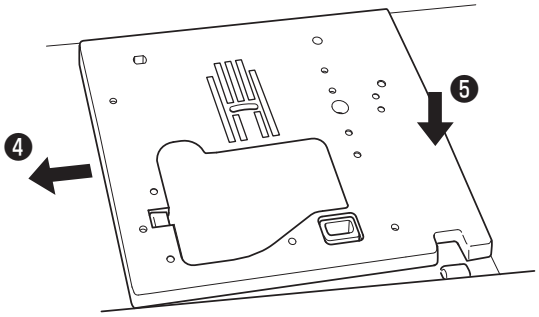

5 Fit the throat plate in position.

Place the area (❹) first and then push center to right hand part of the throat plate to assemble (❺) .

10. Introduction of optional accessory parts

Make your home sewing more pleasant!
Please purchase the following items in the shop where you buy our products.

● Rolled hemming presser foot

Fabric edge is hemmed while rolling it under. Used for bottom of shirts, blouses, frills and the edge of handkerchiefs.

● Button attaching presser foot

This presser foot is used to attach buttons on garments.

● Pearl attaching presser foot

With this presser foot it is possible to attach pearls, beads and thick cord.

● Presser foot with guide

As the presser foot has markings, which show 2 mm distance, these marking will serve as a guide.

● Binder presser foot

It is possible to attach tapes such as bias tape into four folds.

● Twin needle

By using two needles beautiful decorative stitches can be sewn. (Twin needle with size: 2.0 mm)

● Adapter shank

The presser foot joint is necessary when the separately-available presser foot that is to be attached after removing the presser foot holder.

requires the adapter shank.

● Cording and Embroidery presser foot

It is used in free motion quilting and a cord can be sewn together with this presser foot.

● Hemming presser foot for zigzag

Fabric edge is hemmed by zigzag while rolling it under. Used for bottom of shirts, blouses, frills and the edge of handkerchiefs.

● Appliqué presser foot

Since the front and back of the presser foot is short, it is easy to move the materials at curve points. Also fabrics can be seen easily because it is transparent.

● Cording presser foot

It is possible to attach 1 - 3 cords by three-point zigzag or decorative stitch.

● Invisible zipper foot

As a seam does not appear on the right side of the fabric, an opening can be finished with fabric edges neatly butted.

● Smooth presser foot

This presser foot is used for non-slippery materials like vinyl and satin stitches.

● Edge Sewing presser foot

This is used for patchwork, sewing center line of joined materials by using the center guide of the presser foot.

● Quilt presser foot (open type)

It is used in free motion sewing. As the front portion is open, it is easy to see the needle entry point.

● Quilt presser foot (zigzag type)

It is used for free-motion quilting. Zigzag stitch is also possible with this presser foot.

● Magnifier

Creates additional magnification to the stitch area.

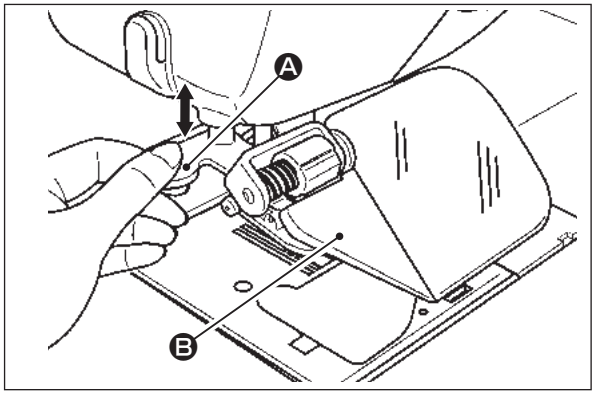

Attention	If you pull out the magnifier swiftly, your finger may be injured or the cover can be broken.

1) To install the magnifier, carefully insert it into the mounting hole.
2) To adjust the magnifier position, carry out adjustment holding translucent section Ⓑ on the left side of the lens surface.
3) To remove the magnifier, carefully draw it out holding handle section Ⓐ .

* If the magnifier lens surface looks apparently dirty, wipe it clean with a piece of soft cloth in order to prevent the lens from being damaged.

● Spool holder

A spool on which thread is thickly wound can be set. This spool is useful when sewing many stitches at a time such as quilting.

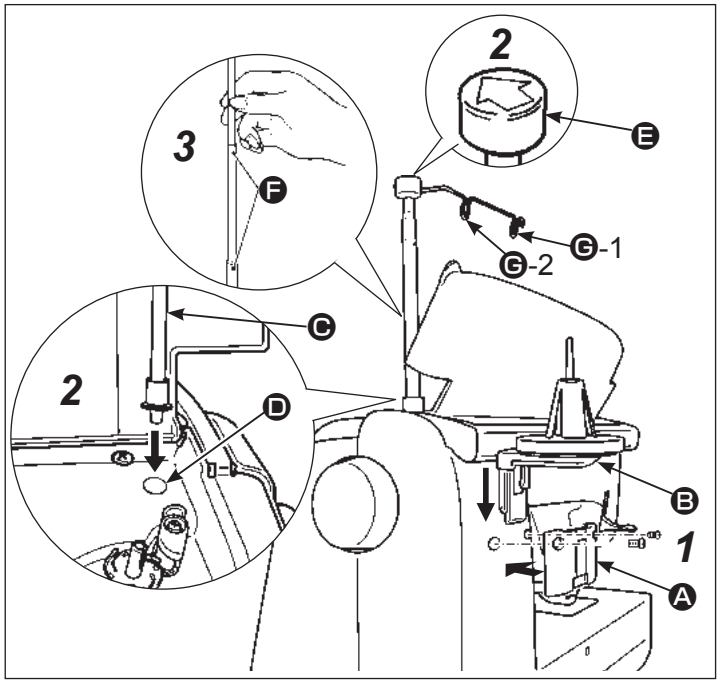

Attention	If you pull the spool holder diagonally or swiftly, it can be broken.

1 Attaching the spool holder.

- Install base plate Ⓐ on the back surface of the sewing machine with two screws.
- Carefully insert spool holder Ⓑ into plate Ⓐ until you hear a snick.

2 Attaching the thread guide post.

- Open the top cover of the sewing machine and insert the thread guide post Ⓒ into mounting hole Ⓓ.
- Fit thread guide Ⓔ over the thread guide post with the arrow on the top of the former faced toward the front of the sewing machine.

3 Raise the thread guide post fully.

- Turn the spool holder until it engages the positioning stopper Ⓕ with a click.

4 Set the thread on the spool holder. Draw the thread from the spool which is thickly wound with thread you have placed on the spool holder. Put the thread on thread guide Ⓖ-1 and Ⓖ-2 in the written order and thread the machine head as usual.

11. Performance check list

If sewing difficulties occur, make sure the instructions are correctly followed.
If a problem still exists, the reminders below may help solve it.

Case	Cause (Reason)	Solution	Reference page
● The machine stops sewing suddenly. (This is in case you can turn hand wheel by hand.)	● The machine sews at slow speed continuously. (The machine has a mechanism to automatically cut off the power to prevent the motor from overheating.)	● Turn off the power and wait for a while (about 10 minutes). The safety mechanism will be reset and the machine will return to normal.	3
● The machine will not work even when start/stop button is pressed. (This is in case sewing light is still on.)	● The needle hits presser foot due to an installation of incorrect presser foot. ● The needle fell into the hook area and tried to start.	● Use the appropriate presser foot to the selected stitch pattern. ● Remove the needle from the hook area.	- -
● Needle breaks.	● Thick material is sewn with a thin needle. ● The needle is not inserted fully. ● The needle setscrew is not securely tightened. ● The wrong presser foot is used for a certain pattern. ● Needle is bent.	● Check the combination of fabric, thread and needle. ● Check the installation of needle. ● Securely tighten the needle setscrew. ● Check the combination of stitch pattern and presser foot to be used. ● Change needle.	26 25 25 - 25
● Loud noise and/ or keen noise while sewing.	● Lint or dust has accumulated in the feed dog. ● Lint or dust has accumulated in the hook.	● Clean the feed dog area. ● Clean the hook area.	119 119
● Machine fails to feed fabrics.	● The stitch length is set at “0”. ● Soft fabrics such as towels are being sewn. ● The machine is set in drop feed condition. ● The height of the micro-lifter is too high.	● When the stitch pattern is reselected, the machine goes back to the default setting. ● Set the stitch length to 3 to 5. ● Lift the feed dog. ● Adjust the height of the micro-lifter.	44 - 49 39
● Needle can not be threaded. (This is in case needle threader will not turn.) ● The hook of needle threader does not go through the needle eye.	● The needle is not in the up position. (When needle is not in the up position, needle threader will not turn. This is to avoid damages to the hook.) ● The needle is not inserted fully.	● Rotate the hand wheel and lift the needle upwards. ● Check the installation of the needle.	31 25

Case	Cause (Reason)	Solution	Reference page
● The needle threading lever will not return to the original position and the machine can not turn properly. (This is in case the hook of needle threader remains in the needles eye.)	● Hand wheel is turned by mistake while the needle threading lever is in down position. (in the process of threading to the needle.)	● Turn hand wheel slightly away from you. (to the opposite side when sewing).	-
● The machine will not start even when start/stop button is pressed.	● The foot controller is plugged in.	● Start/stop button can function when foot controller is removed.	16
● Thread breaks. ● Stitch is skipped.	● The machine is incorrectly threaded. ● There is knot or knurl on the thread. ● Thread tension is not adjusted appropriately. ● The needle is bent or the tip of needle is broken. ● The needle is installed incorrectly. ● Threading of bobbin thread is not correct. ● The bobbin can not turn smoothly inside the hook holder. ● The needle size does not match the thread. ● Thread take-up is not threaded.	● Rethread the machine correctly. ● Remove knot or knurl from thread. ● Adjust thread tension manually according to fabrics and thread to be used. ● Change needle. ● Install needle correctly. ● Check the correct way of setting bobbin thread. ● Check the correct way of winding bobbin thread. ● Check the combination of thread and needle. ● Rethread the machine correctly.	32 - 36 25 25 29 - 26 33
● Thread tension is not good.	● The needle thread is threaded in correctly. ● The bobbin thread is threaded incorrectly. ● The direction of spool cap doesn't match the spool.	● Rethread the machine correctly. ● Check the correct way of setting bobbin thread. ● Attach the spool cap in a correct direction.	32 29 32
● Puckering occurs.	● The stitch length is too large on lightweight fabrics. ● The needle tip is broken.	● Make the stitch length smaller (shorter). ● Change needle.	44 25
● ⌛ sign is shown on the LCD display.	● Safety mechanism works when machine stops due to motor lock. Or, when the voltage fault has occurred.	● The safety mechanism will be reset in a short while and the machine will return to normal. (At this time, the start/stop button will not light up.)	-

12. List of stitch patterns

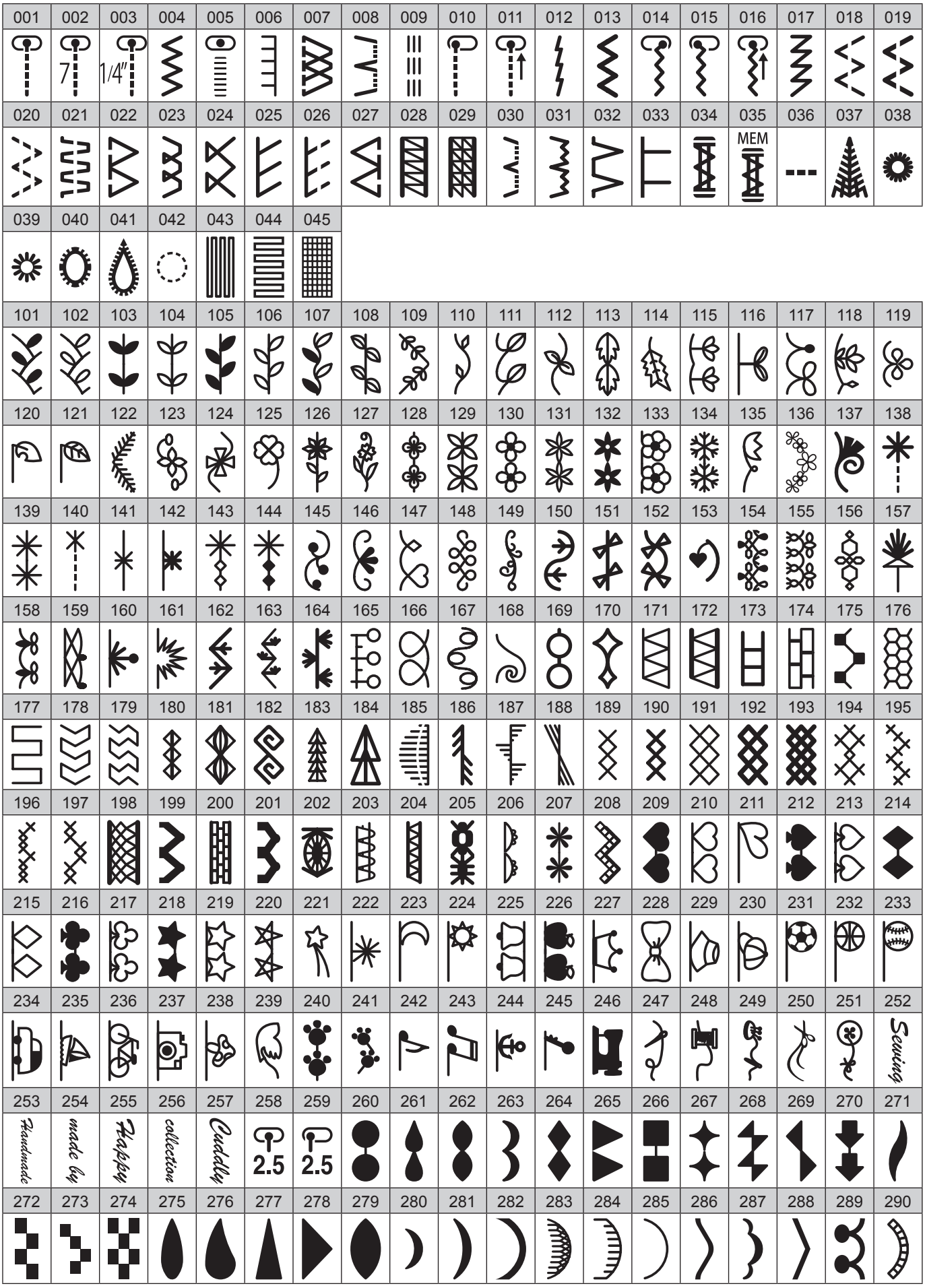

* The listing can be found inside the top cover of the sewing machine.

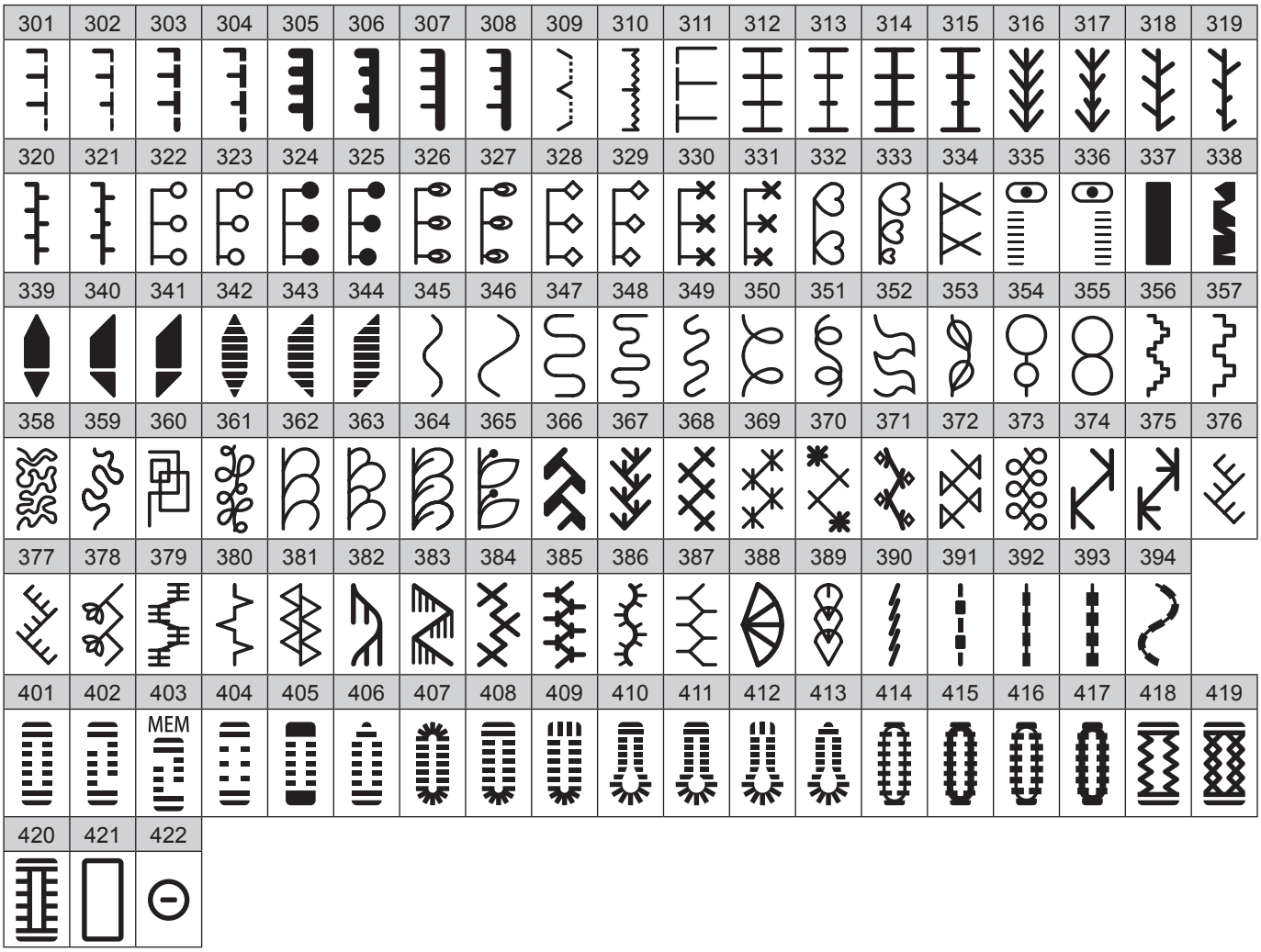

Letters/numbers/signs

@ ! & ' ( ) , . ? - · / : ;
ABCDEFGHIJKLMNOPQRSTUVWXYZ
abcdefghijklmnopqrstuvwxyz
1234567890
ÄÅÆàäåèéêëÇœçìÑñÖØòöøÜùü

@ ! & ' ( ) , . ? - · / : ;
ABCDEFGHIJKLMNOPQRSTUVW
XYZ
abcdefghijklmnopqrstuvwxyz
1 2 3 4 5 6 7 8 9 0
ÄÅÆàäåèéêëÇçìÑñÖØòöøœÜùü

@ ! & ' ( ) , . ? - · / : ;
ABCDEFGHIJKLMNOPQRS
TUVWXYZ
abcdefghijklmnopqrstuvwxyz
1 2 3 4 5 6 7 8 9 0
ÄÅÆàäåèéêëÇçìÑñÖØòöøœÜùü

@ ! & ' ( ) , . ? - · / : ;
ABCDEFGHIJKLMNOPQRS
TUVWXYZ
abcdefghijklmnopqrs
tuvwxyz
1 2 3 4 5 6 7 8 9 0
ÄÅÆàäåèéêëÇçìÑñÖØòöøœÜùü

あいうえお　ぁぃぅぇぉ
かきくけこ　がぎぐげご
さしすせそ　ざじずぜぞ
たちつてとっだぢづでど
なにぬねの
はひふへほ　ばびぶべぼ ぱぴぷぺぽ
まみむめも　やゆよゃゅょ
らりるれろ　わをん

アイウエオ　ァィゥェォ ヴ
カキクケコ　ガギグゲゴ
サシスセソ　ザジズゼゾ
タチツテトッ ダヂヅデド
ナニヌネノ
ハヒフヘホ　バビブベボ パピプペポ
マミムメモ　ヤユヨャュョ
ラリルレロ　ワヲン

！？ - 。、「 」゛ ．〜 ー ・
一二三四五六七八九十
幼稚園保育小学校年組才

■ Specification list

Item	Specification
Body size	57.5 (W) × 31.0 (H) × 24.0 (D) cm
Weight	14.8 KGS
Volts	220 V - 240 V ∿
Watts	85 W
Hertz	50/60 Hz
Foot control model No.	JC-002

JUKI CORPORATION
2-11-1, TSURUMAKI, TAMA-SHI,
TOKYO, 206-8551, JAPAN
PHONE : (81)42-357-2341
FAX : (81)42-357-2379

Copyright © 2018 JUKI CORPORATION
All rights reserved throughout the world.

40201417-1

000618