JUKI®

COMPUTER SEWING MACHINE

HZL-UX8

INSTRUCTION MANUAL

EN

www.sewshop.eu

⚠ Attention	**Please read this instruction manual before using the machine as it contains important operational and safety information.** **Keep this manual accessible so that you may refer to it at anytime while operating the machine.**

www.sewshop.eu

“IMPORTANT SAFETY INSTRUCTIONS”

When using an electrical appliance, basic safety precautions should always be followed, including the following: Read all instructions before using this sewing machine.

“DANGER ___ To reduce the risk of electric shock:”

1. The appliance should never be left unattended when plugged in.
2. Always unplug this appliance from the electric outlet immediately after using and before cleaning.

“WARNING ___ To reduce the risk of burns, fire, electric shock, or injury to persons:”

1. Do not allow this appliance to be used as a toy. Close attention is necessary when this appliance is used by or near children. This appliance can be used by children aged from 8 years and above and persons with reduced physical, sensory or mental capabilities or lack of experience and knowledge if they have been given supervision or instruction concerning use of the appliance in a safe way and understand the hazards involved. Children shall not play with the appliance. Cleaning and user maintenance shall not be made by children without supervision.
2. Use this appliance only for its intended use as described in this manual. Use only attachments recommended by the manufacturer as contained in this manual.
3. Never operate this appliance if it has a damaged cord or plug, if it is not working properly, if it has been dropped or damaged, or dropped into water. Return the appliance to the nearest authorized dealer or service center for examination, repair, electrical or mechanical adjustment.
4. Never operate the appliance with any air openings blocked. Keep ventilation openings of the sewing machine and foot control free from the accumulation of lint, dust, and loose cloth.
5. Keep fingers away from all moving parts. Special care is required around the sewing machine needle.
6. Always use the proper stitch plate. The wrong plate can cause the needle to break.
7. Do not use bent needles.
8. Do not pull or push fabric while stitching. It may deflect the needle causing it to break.
9. Switch the sewing machine off “O” when making any adjustments in the needle area, such as changing needle, threading bobbin, or changing presser foot.
10. Always unplug the machine from the electrical outlet when removing covers, when lubricating or when making any other user servicing adjustments mentioned in the instruction manual.
11. Never drop or insert any object into any opening.
12. Do not use outdoors.
13. Do not operate where aerosol (spray) products are being used or where oxygen is being administered.
14. To disconnect, turn all controls to the off “O” position, then remove plug from outlet.
15. Do not unplug by pulling on cord. To unplug, grasp the plug, not the cord.
16. Basically, the machine should be disconnected from the electricity supply when not in use.
17. If the power cord of this appliance is damaged, it must be replaced with a special cord by your nearest authorized dealer or service center.
18. (Except USA/Canada) This machine is provided with double insulation.
    Use only identical replacement parts. See instructions for servicing Double-Insulated machine.

“SERVICING DOUBLE-INSULATED PRODUCTS”

In a double-insulated product, two systems of insulation are provided instead of grounding. No grounding means is provided on a double-insulated product nor should a means for grounding be added to the product. Servicing a double-insulated product requires extreme care and knowledge of the system and should only be done by qualified service personnel. Replacement parts for a double-insulated product must be identical to those parts in the product. A double-insulated product is marked with the words DOUBLE INSULATION or DOUBLE INSULATED.
The symbol ⧈ may also be marked on the product.

“SAVE THESE INSTRUCTIONS”

“This sewing machine is intended for household use only.”

Congratulations on your purchase of a JUKI sewing machine.
Please be sure to read safety precautions in “To use the sewing machine safely” in the Instruction Manual before use to fully understand the functions and operating procedures of the sewing machine so as to use the sewing machine for a long time.
After you have read the Instruction Manual, please be sure to keep it together with the warranty so that you can read it whenever necessary.
The instruction manual is subject to change without prior notice for improvement.
Please visit the JUKI website for the latest version.
https://www.juki.co.jp/household_en/hsm/pdf/HZL-UX8_EN_manual.pdf

To use the sewing machine safely

Marks and pictographs included in the Instruction Manual and shown on the sewing machine are used so as to ensure safe operation of the sewing machine and to prevent possible risk of injury to the user and other people.
Warning marks are used for different purposes as described below.

WARNING	**Indicates that there is a possible risk of death or serious injury if this mark is ignored and the sewing machine is used in a wrong manner.**
ATTENTION	**Indicates the operation, etc. which can cause a possible risk of personal injury and/or physical damage if this mark is ignored and the sewing machine is used in a wrong manner.**

Pictographs mean the following:

	Danger warning which is not specified		**There is a risk of electrical shock**		**There is a risk of fire**		**There is a risk of injury to hands, etc.**
	Prohibited matter which is not specified		**Disassembly/ alteration is prohibited**		**Do not place fingers under the needle**		**Do not pour oil, etc.**
	Generally required behavior		**Disconnect the power plug**				

www.sewshop.eu

⚠ WARNING

For the combination of the material and the thread and needle, in particular, refer to the explanation table in “Replacement of the needle”.
If the needle or thread does not match the material used such as in the case that an extra heavy-weight material (e.g., denim) is sewn with a thin needle (#11 or higher), the needle can break resulting in an unexpected personal injury.

Other precautions

- Do not put the sewing machine under the direct sunlight or in a humid place.

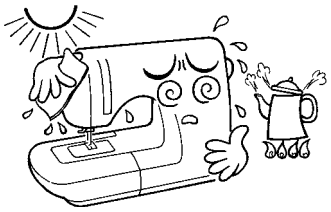

- Do not wipe the sewing machine with solvent such as thinner.

When the sewing machine is soiled, put a small quantity of neutral detergent on a piece of soft cloth and carefully wipe off the sewing machine with it.

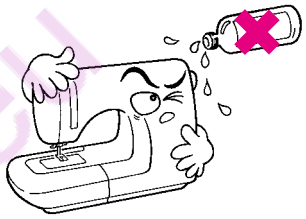

Be aware that the following state can take place since the sewing machine incorporates semi-conductor electronic parts and precise electronic circuits.

- Be sure to use the sewing machine in the temperature range from 5ºC to 40ºC.
  If the temperature is excessively low, the machine can fail to operate normally.

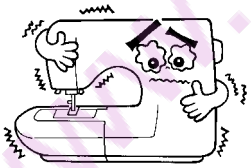

- The safety device of the sewing machine will work to stop the sewing machine in order to prevent the generation of abnormal heat in the case the sewing machine is continuously engaged in sewing at a low sewing speed for a long time or it is continuously engaged in sewing for a long time under the high temperature environment. In this event, Start and Stop button will not light.

The sewing machine will return to working condition after about 10 minutes.

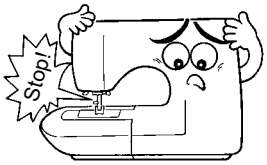

* The operating temperature of the sewing machine is between 5ºC and 40ºC. Do not use the sewing machine under the direct sunlight, near the burning things such as a stove and candle, or in a humid place. By so doing, the temperature in the interior portion of the sewing machine can rise or the coating of the power cord can melt, causing fire or electrical shock.

www.sewshop.eu

- Be sure to move the sewing machine by holding its handles.

Do not hold portion Ⓐ when you lift the sewing machine.

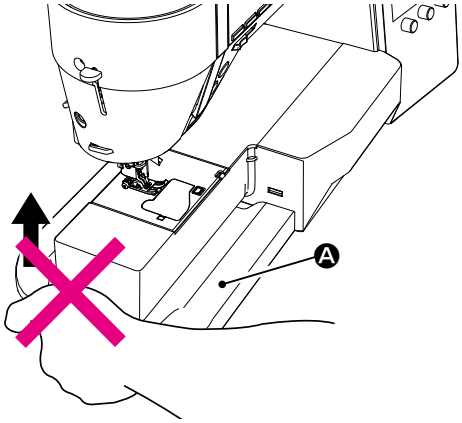

If the sewing machine is heavy, lift it by putting your arm through the arm section.

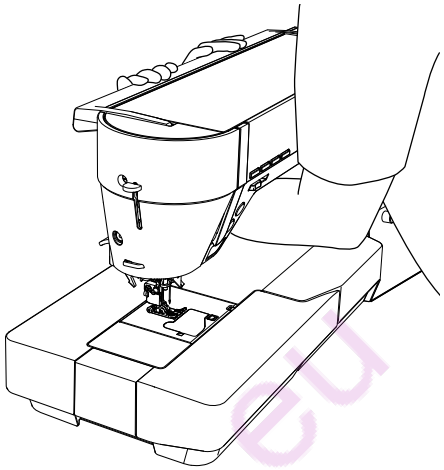

Basic screen operation method

- **Tap**
  Tap the screen with your fingertip once.

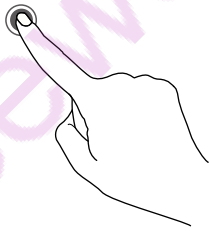

- **Pinch the screen**
  Pinch with two fingers.
  - **Pinch in**
    Squeeze your fingers together.
  - **Pinch out**
    Spread your fingers

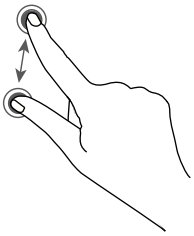

- **Swipe**
  Tap the screen and slide your fingertip.

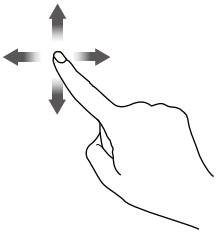

www.sewshop.eu

CAUTION

For customers in the USA

This device complies with Part 15 of the FCC Rules. Operation is subject to the following two conditions: (1) This device may not cause harmful interference, and (2) this device must accept any interference received, including interference that may cause undesired operation.

NOTE: This equipment has been tested and found to comply with the limits for a Class B digital device, pursuant to Part 15 of the FCC Rules. These limits are designed to provide reasonable protection against harmful interference in a residential installation. This equipment generates, uses, and can radiate radio frequency energy and, if not installed and used in accordance with the instructions, may cause harmful interference to radio communications. However, there is no guarantee that interference will not occur in a particular installation. If this equipment does cause harmful interference to radio or television reception, which can be determined by turning the equipment off and on, the user is encouraged to try to correct the interference by one or more of the following measures:

- Reorient or relocate the receiving antenna.
- Increase the separation between the equipment and receiver.
- Connect the equipment into an outlet on a circuit different from that to which the receiver is connected.
- Consult the dealer or an experienced radio/TV technician for help.

This equipment complies with FCC/IC radiation exposure limits set forth for an uncontrolled environment and meets the FCC radio frequency (RF) Exposure Guidelines and RSS-102 of the IC radio frequency (RF) Exposure rules. This equipment has very low levels of RF energy that is deemed to comply without maximum permissive exposure evaluation (MPE). But it is desirable that it should be installed and operated keeping the radiator at least 20 cm or more away from person's body.

This equipment must not be co-located or operated in conjunction with any other antenna or transmitter.

For customers in the Europe

This radio equipment is intended to be used with the approved version(s) of software that are indicated in the EU Declaration of Conformity.
The software loaded on this radio equipment is verified to comply with the essential requirements of the Directive 2014/53/EU.

www.sewshop.eu

Contents

"IMPORTANT SAFETY INSTRUCTIONS" .. 1

Contents 6

1. Configuration and functions 8

1.1. Operating buttons 9

1.2. Operation panel 10

2. Accessories 12

3. Set-up 14

3.1. How to install Wide Table..... 14

3.2. Changing the position of the foot switch..... 15

3.3. Installation of knee lifting lever..... 15

4. Basic settings and basic operations 16

4.1. Connecting to the power supply 16

4.2. Speed control..... 18

4.3. Lifting/lowering of the presser foot 19

4.4. Changing the presser foot..... 20

4.5. Placing and releasing "JUKI Smart Feed" 22

4.6. Changing the throat plate and the feed dog 23

4.7. How to use the throat plate for straight stitch 24

4.8. Attaching the needle 25

4.9. Fabric, thread and needle table..... 26

4.10. Bobbin thread preparation 27

4.11. Needle thread preparation 31

4.12. How to adjust thread tension 36

4.13. Setting the presser foot pressure 38

4.14. Setting the micro-lifter 38

4.15. Setting the automatic back tacking, thread trimming and presser foot lifting..... 39

4.16. When changing the needle position 40

4.17. When changing the zigzag width 41

4.18. When changing the stitch length 42

4.19. Setting the stop position of needle..... 43

4.20. Pivot setting 43

5. Setting for the pattern sewing..... 44

5.1. Single mode / Combination mode..... 44

5.1.1. Single mode..... 44

5.1.2. Combination mode..... 45

5.2. Types of patterns under the single mode, and how to selected a pattern 46

5.2.1. Practical 46

5.2.2. Buttonhole 48

5.2.3. Appliqué 49

5.2.4. Tapering 49

5.2.5. Quilt line..... 50

6.2.6. Scallop 50

5.2.7. One-point 51

5.2.8. Decorative..... 52

5.2.9. Vintage 53

5.2.10. Feather / Lace 53

5.2.11. Letters 54

5.3. Combination of patterns under the combination mode 55

5.4. Types of edit functions and how to use them 58

5.4.1. Pattern inversion..... 59

5.4.2. Setting the interval between patterns 60

5.4.3. Reset settings..... 60

5.4.4. Writing / capturing the pattern data.. 61

www.sewshop.eu

6. Sewing 62
6.1. Straight stitch 62
6.2. Inserting zippers 67
6.3. Patchwork piecing 68
6.4. Overcasting stitch 69
6.5. Blind stitch 70
6.6. Shell tuck 73
6.7. Bartacking 74
6.8. Eyelet 76
6.9. Decorative stitches 77
6.10. Lace / feather / overlapping and tiling (blackwork) patterns 78
6.11. Scallop stitches 79
6.12. Random pattern 80
6.13. Tapering 81
6.14. Buttonhole stitches 84
6.15. Manual 2-step buttonhole 91
6.16. Sewing buttons 93
6.17. Quilting (free motion) 94
6.18. Hand look quilt stitches 96
6.19. Quilting (quilt guide) 97
6.20. Elongation 98
6.21. Stitch in ditch quilting 99
6.22. Attaching a quilt sleeve 100
7. Operation of the operation panel ... 102
7.1. Support 102
7.2. Setting 103
① Darning adjustment 104
② Stop position of needle 105
③ Pivot 105
④ Sound volume 106
⑤ Brightness 106
⑥ Stitch speed 107
⑦ Presser foot lifting height 107
⑧ Cancel safety 108
⑨ Foot switch functions 108
⑩ Two needles 109
⑪ Wireless LAN 110
⑫ Factory data reset 111
⑬ Software version 111
⑭ Machine log 114
⑮ Language 115
⑯ Accessibility (Black-and-white inversion of display) 115
⑰ Shutdown 116
7.3. Sewing 117
7.4. History 117
7.5. JUKI Sewing Net 117
8. Message catalog 118
9. Machine Maintenance 123
10. Introduction of optional accessory parts 124
11. Performance check list 126
12. List of stitch patterns 128
Specification list ..... back cover

www.sewshop.eu

1. Configuration and functions

④ Presser foot auto lift button
③ Feed dog UP/DOWN / LOCK MODE button
② Needle up/down button
① Thread trimming button
Face plate cover
Threading lever
⑤ Speed controller
Presser foot lifting lever
Sensor pinhole for buttonholing
Thread cutter
"JUKI Smart Feed"
⑧ Start/stop button
Auxiliary bed (accessory case)
Spool pin
Spool cap (large)
Handle
Bobbin winding shaft
Operation panel
Light under arm
⑥ Lock stitch button
⑦ Reverse stitch button
Knee lifting lever hole

Wide table

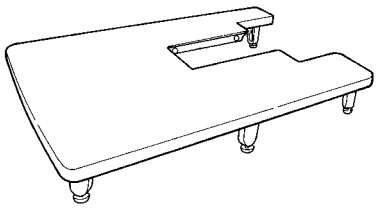

Hand wheel (pulley)
Power switch
USB insertion slot
Foot-controller-jack
Machine-socket-inlet

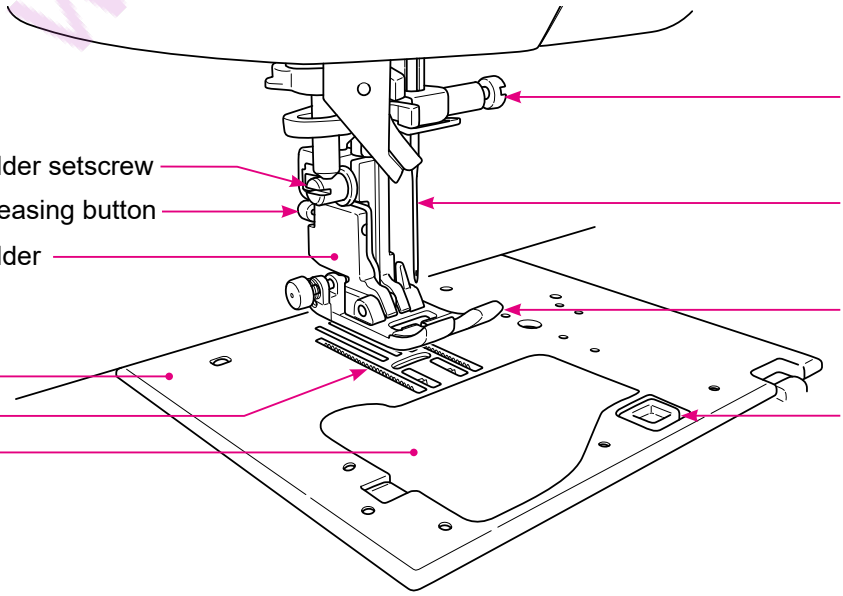

Presser foot holder setscrew
Presser foot releasing button
Presser foot holder
Throat plate
Feed dog
Hook cover
Needle setscrew
Needle
Presser foot
Hook cover release button

www.sewshop.eu

1.1. Operating buttons

		Name	Function
①		**Thread trimming button**	After sewing, press this button to trim both threads automatically. The sewing machine stops with its needle up after thread trimming. In the case of 2-needle setting, this button will not operate even if the thread trimming button is pressed.
②		**Needle up/down button**	When machine stops, press this button to change the needle position. When the needle is up, the needle moves down and vise versa. The sewing machine performs sewing at a low speed by keeping this button held pressed for a long time.
③		**Feed dog UP/ DOWN / LOCK MODE button**	When you press this button while the sewing machine is at rest, the feed dog position is changed over. Lamp lights up: The feed dog is at its lower position Lamp goes out: The feed dog is at its upper position *1 If you keep this button held pressed, all operations can be disabled (lock mode). If you keep it held pressed again, the lock mode will be reset.
③		**Presser foot auto lift button**	When this button is pressed while the sewing machine is at rest, the presser foot position is changed. When the presser foot is in its upper position,it comes down to its lower position and vice versa.
④		**Speed controller**	Sewing speed can be adjusted with the sliding lever of Speed Controller freely. The sewing speed is increased by moving the speed controller to the right, or decreased by moving it to the left. When sewing with foot controller, Max. sewing speed can be set by Speed Controller.
⑤		**Lock stitch button**	When this button is pressed, the sewing machine performs lock stitch. When this button is pressed while the sewing machine is engaged in pattern sewing, the sewing machine stops after it has completed the sewing of the one-cycle/one-point of the pattern.
⑥		**Reverse stitch button**	For straight stitch/zigzag stitch: The sewing machine performs reverse stitch as long as this button is held pressed. For other stitch types: The sewing machine performs lock stitch.
⑦		**Start/stop button**	When pressing this button, machine starts to sew slowly and then up to the speed set by speed controller. Another press of this button stops the sewing machine. Color of button indicates machine status. **Green:** Ready to start and/or while sewing **Red:** Not ready to start **Orange:** When the lock stitch button is pressed while the sewing machine is engaged in pattern sewing (The sewing machine performs lock stitch after it has completed the sewing of the pattern by one cycle. Then, the sewing machine stops.) * When the foot controller is plugged in, the start/stop button cannot be used to start sewing. Start button: Can not operate to start sewing. Stop button: Can operate to stop sewing.

*** 1 ⚠ Lock Mode given in the Instruction Manual refers to the operation to "keep the feed dog UP/DOWN / LOCK MODE button held pressed to disable operation of the all keys". (Refer to page 17)**

www.sewshop.eu

1.2. Operation panel

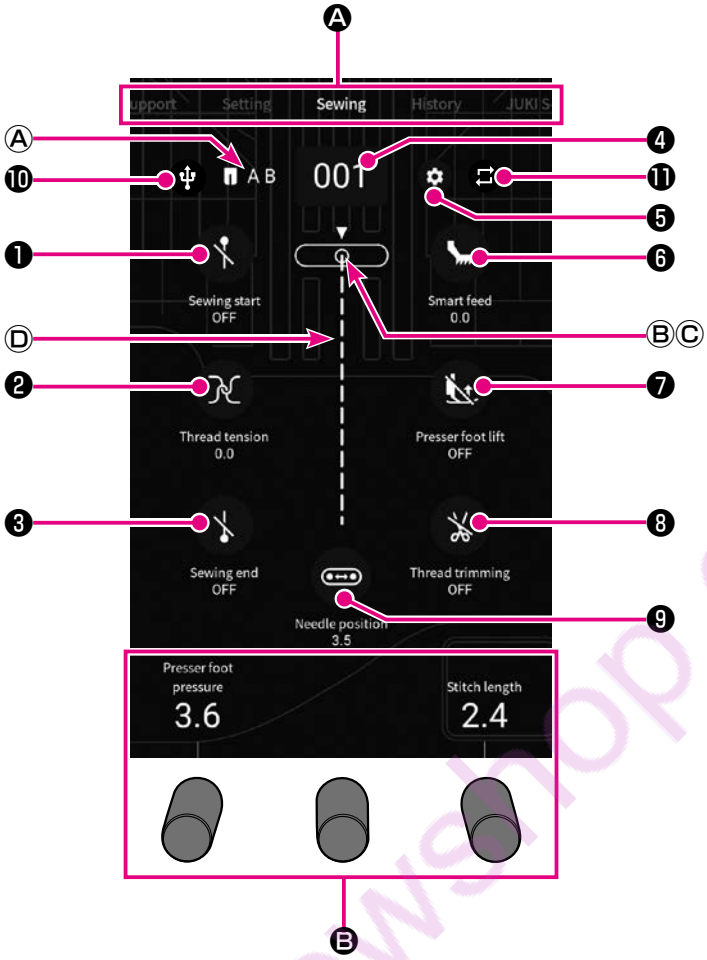

Tap the screen with your fingers.

When you have changed the setting, the color of the screen display changes.
White: Initial value
Blue: Changed value

	Name	Function
Ⓐ	**Tab**	Select the screen according to your purpose.
	Support	Main usage of the sewing machine can be checked. (Refer to page 102)
	Setting	Setting of the functions (17 kinds) can be changed. (Refer to page 103)
	Sewing	Selection and adjustment of the pattern can be carried out.
	History	Information on the patterns you have sewn remains as history. If you want to sew the pattern using the condition you have set previously, you may select it from the history.
	JUKI Sewing Net	JUKI website is displayed.
Ⓑ	**Adjusting Dial**	Function of the adjusting dial differs with the selected pattern. Function and the numeric value are displayed on the screen. Type: “Presser foot pressure”, “Stitch length”, “Zigzag width”, “Tapering length”, “Elongation”

www.sewshop.eu

		Name	Function
Ⓐ	A B	**Presser Foot**	Suitable presser foot for the stitch pattern is displayed.
Ⓑ		**Needle Position**	Needle position ▼ is displayed.
Ⓒ		**Type of Throat Plate**	The type of throat plate is displayed. : Standard throat plate : Throat plate for straight stitch
Ⓓ	-	**Sewing Condition**	Stitch Pattern which is sewn currently or to be sewn is displayed.
❶		**Sewing-start back tacking icon**	Automatic back tacking at the start of sewing can be set. : OFF : Reverse stitch : Lock stitch
❷		**Thread tension icon**	Press the thread tension icon when you want to change the thread tension. The thread tension set value will be returned to the initial value by selecting a different pattern.
❸		**Sewing-end back tacking icon**	Automatic back tacking at the end of sewing can be set. : OFF : Reverse stitch : Lock stitch
❹	001	**Pattern selection icon**	Press this icon to select a pattern. Pattern number of the selected pattern is displayed.
❺		**Pattern edit icon**	Stitch patterns can be edited.
❻		**“JUKI Smart Feed” adjustment icon**	Adjustment value of “JUKI Smart Feed” can be set.
❼		**Presser foot auto lift icon**	Presser foot lifting after thread trimming can be set. : OFF : ON
❽		**Automatic thread trimmer icon**	Back tacking and thread trimming can be set. : OFF : ON
❾		**Needle position icon**	Press this icon to change the needle position.
❿		**USB icon**	This icon is displayed on the pattern edit screen when a USB thumb drive is inserted into the USB slot of the sewing machine. Patterns can be “captured” from and “written” in the USB thumb drive by pressing this icon.
⓫		**Repetition sewing**	This icon can be used to set for sewing a combination pattern in repetition or for sewing a single pattern by one cycle. In the case of sewing the pattern by one cycle, “1” is displayed. Initial setting Single pattern: Repetition Combination pattern: 1

www.sewshop.eu

2. Accessories

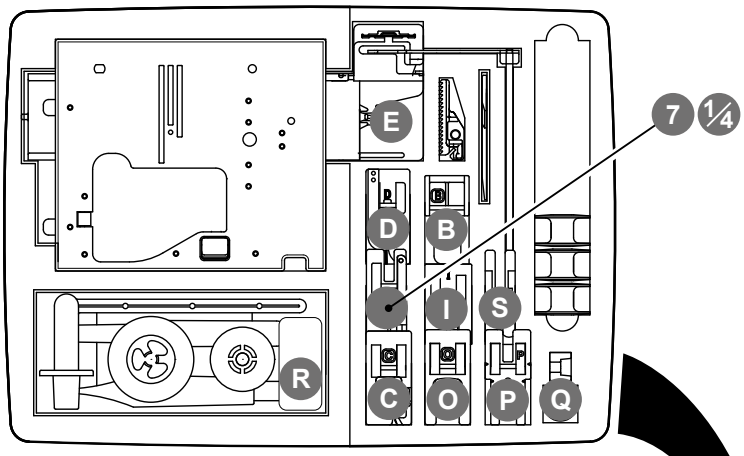

Auxiliary box

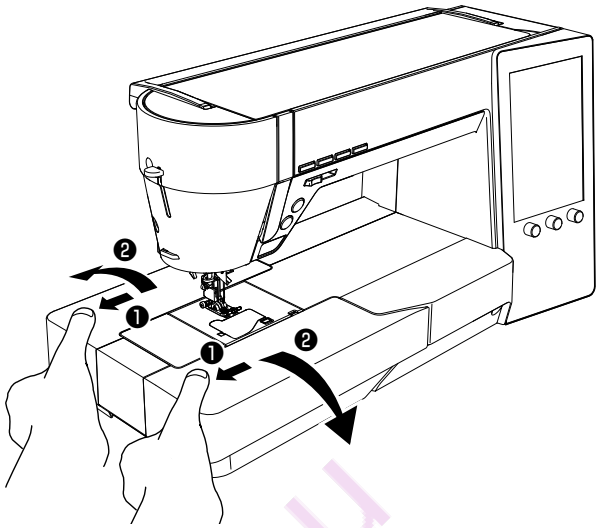

Slightly draw the auxiliary bed cover toward ❶ side, then open it toward ❷ side.

Accessories in the accessory box can also be stored in the auxiliary bed.
Refer to the figure given below for the storage procedure (storage location).

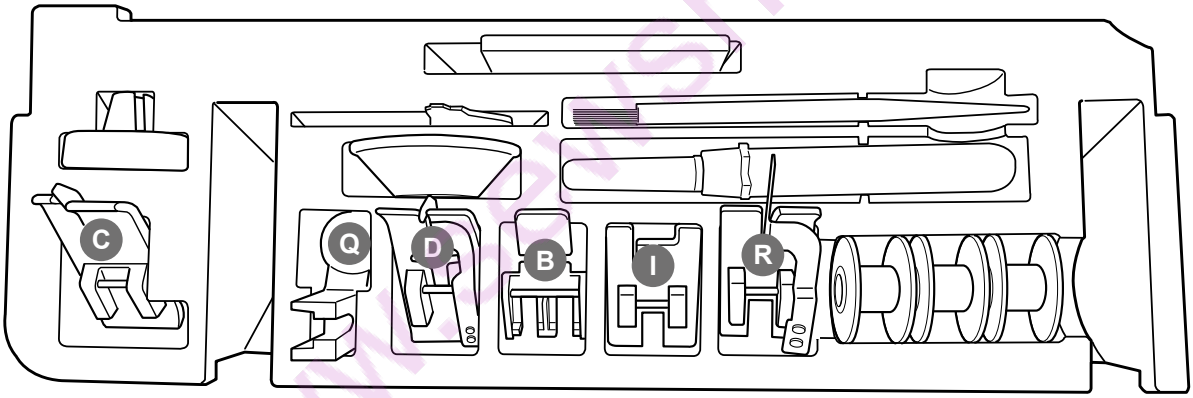

Inside of the auxiliary bed

www.sewshop.eu

● Supplied with the machine

Standard presser foot (A)

Bobbin (1)

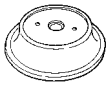

Spool cap (large)

● Inside the auxiliary box.

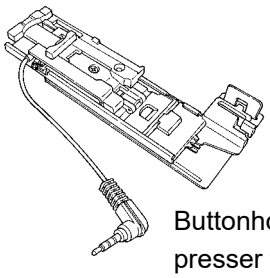

Buttonhole presser foot (E)

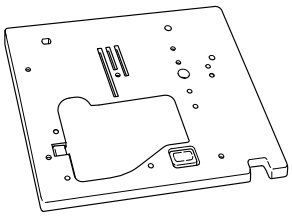

Straight throat plate

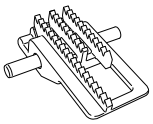

Straight feed dog

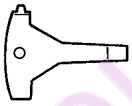

T-shape screwdriver

Quilt guide

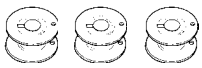

Bobbin (3)

Auxiliary spool pin

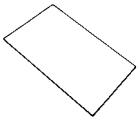

Needle set
HA × 1 # 11 (1)
14 (1)
16 (1)
for knit # 11 (1)

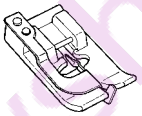

Blind stitch presser foot (D)

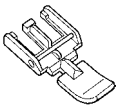

Zipper presser foot (B)

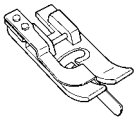

Edge Sewing presser foot (R)

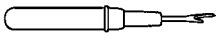

Ripper

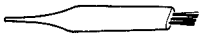

Cleaning brush

Spool cap (Small)

Spool cap (Middle)

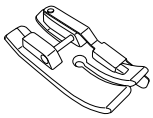

7mm guide foot or 1/4" guide foot

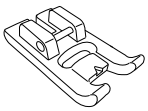

Manual buttonhole presser foot (I)

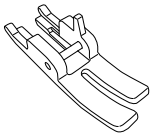

Straight presser foot (S)

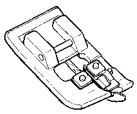

Overcasting presser foot (C)

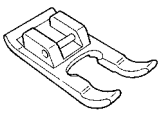

Open toe presser foot (O)

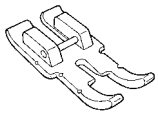

Patchwork presser foot (P)

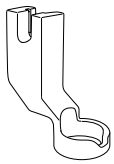

Quilt presser foot (for the ruler) (Q)

● It is contained in the packing.

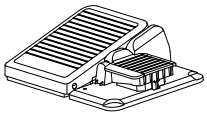

Foot Controller

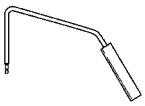

Knee-lifting lever

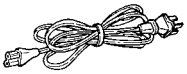

Power cord

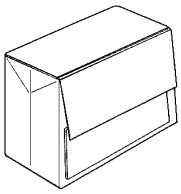

Sewing machine cover

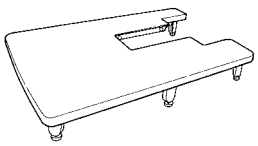

Wide table

Quick Reference Guide
(This manual)

www.sewshop.eu

3. Set-up

3.1. How to install Wide Table

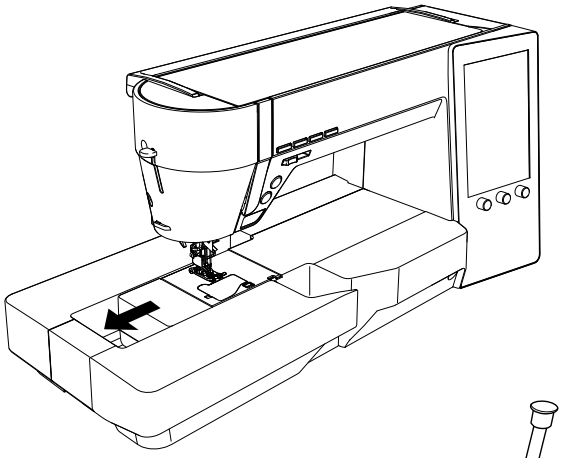

1 **Draw the auxiliary bed out to the left.**

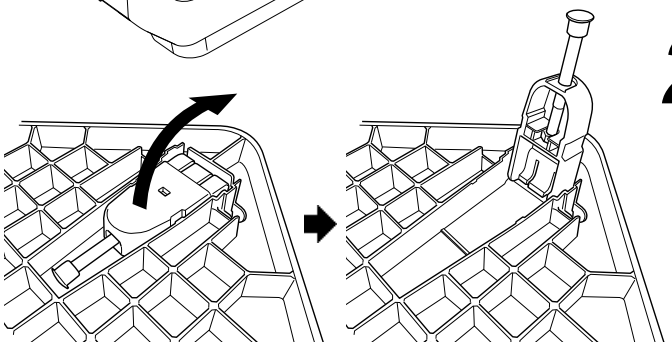

2 **Open legs of Wide Table until they stop securely at the stopping position.**

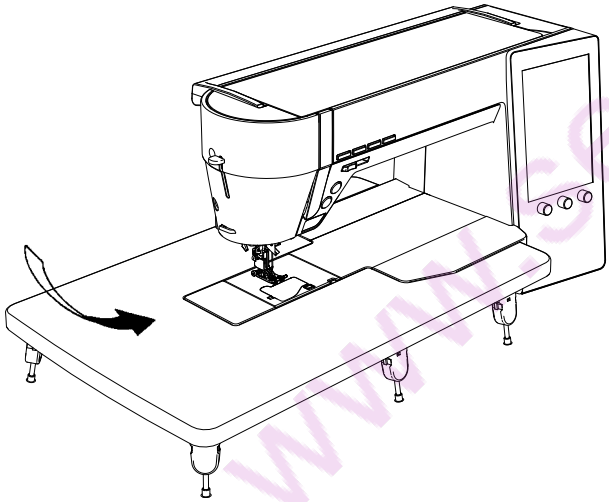

3 **Assemble Wide Table to sewing machine body.**

Attach it to free arm of sewing machine.

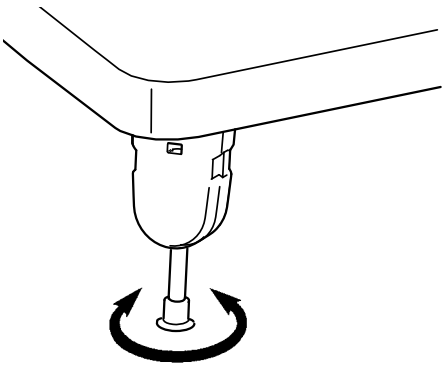

4 **Adjust the height of legs so that the top surface of Wide Table is the same height of sewing machine body.**

www.sewshop.eu

*** Don't put any heavy materials on the Wide Table.**
*** Don't move sewing machine with Wide Table attached.**

3.2. Changing the position of the foot switch

The lateral position of the foot switch in reference to the pedal can be changed.
Use the foot switch at your desired position.

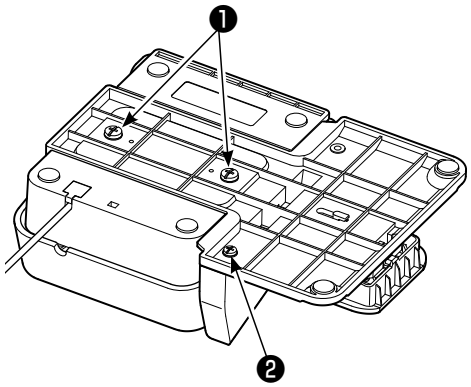

⚠ **Attention**	**Unplug the controller before you change the position of the foot switch.**

1 **Remove pedal setscrew ❶ and block setscrew ❷ .**

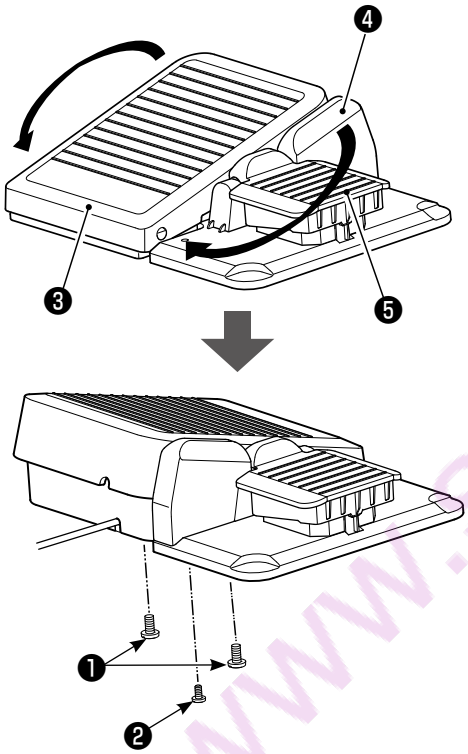

2 **Attach pedal ❸ and block ❹ to the opposite side while turning them in the other way around, and tighten the pedal setscrew and block setscrew.**

❺ Foot switch

www.sewshop.eu

3.3. Installation of knee lifting lever

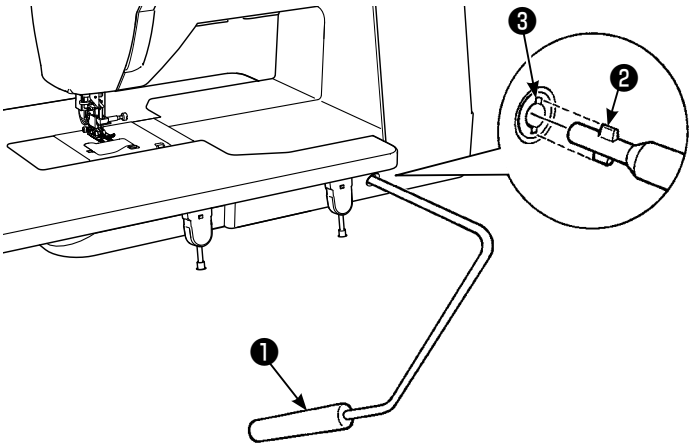

Insert the knee lifting lever ❶ so that concave ❸ and convex ❷ meet.

4. Basic settings and basic operations

4.1. Connecting to the power supply

⚠ **WARNING**	• **Disconnect the plug and turn off the power switch (turn to "O") that always sewing machine is not to use.**

■ Connecting the codes

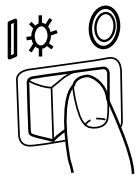

① Turn OFF the power switch (turn to "O")

⚠ **WARNING (For U.S.A.,Canada only)**

This appliance has a polarized plug (one blade wider than the other). To reduce the risk of electric shock, this plug is intended to fit in a polarized outlet only one way. If the plug does not fit fully in the outlet, reverse the plug. If it still does not fit, contact a qualified electrician to install the proper outlet. Do not modify the plug in any way.

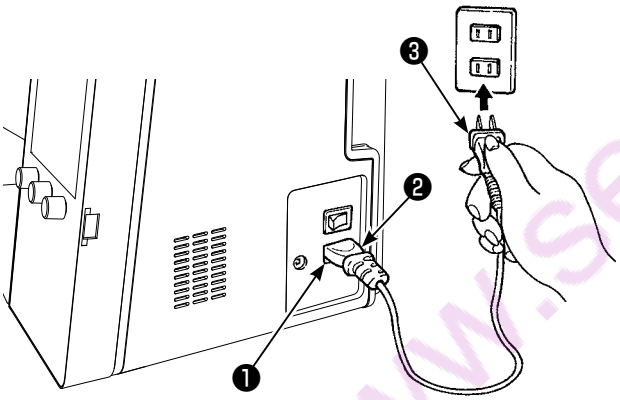

● **Not-using foot-controller that using start/stop-button:**

② Insert cord-connector ❷ into machine-socket-inlet ❶ . Insert plug ❸ into socket-outlet.

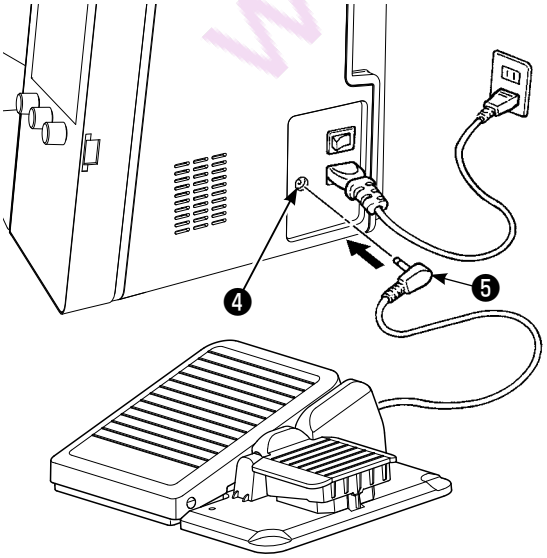

● **Using the foot-controller:**

② Insert the foot-controller-plug ❺ into the foot-controller-jack ❹ .

③ Insert cord-connector into machine-socket-inlet. Insert plug into socket-outlet.

* When the foot controller is plugged in, the start/stop button cannot be used to start sewing.

● Start button: Can not operate to start sewing.

● Stop button: Can operate to stop sewing.

www.sewshop.eu

■ Turning the power ON

Turn ON the power switch. (Turn to “I”)

* **Be aware that the presser foot goes up automatically when the power to the sewing machine is turned ON.**

The screen shown on the left is displayed when you turn ON the power to the sewing machine for the first time after the delivery.

1. Select the language for display.
2. Press [Start].
3. Set the wireless LAN to which the sewing machine is connected.
4. Enter the password for the wireless LAN.
5. Press [CONNECT] .

* This screen is not displayed when you turn ON the power to the sewing machine next time.

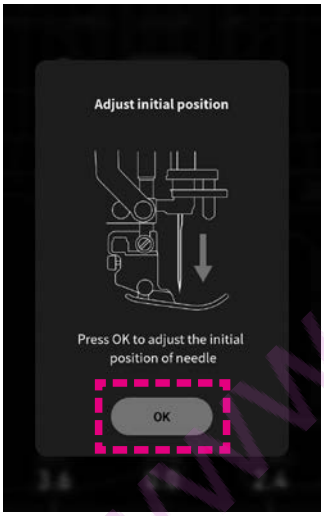

The screen shown on the left when the power to the sewing machine is turned ON.
The needle moves and the screen shown on the left disappears by pressing [OK] .

Do not place fingers under the needle

● Lock mode

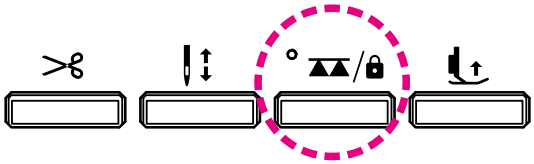

If the sewing machine is put in the lock mode, operation of all operating buttons, operating keys and operation panel will be disabled. In addition, the sewing machine itself will also be disabled.
Even in this state, the presser foot lifting lever and the knee lifting lever can be operated.

The power to the sewing machine should be turned OFF for the sake of safety when changing the presser foot, changing the throat plate and feed dog, changing the needle or taking care of the sewing machine. However, those kinds of work can be carried out while retaining the current settings of the sewing machine by putting the sewing machine in the lock mode.

- When you want to put the sewing machine in the lock mode, keep the feed dog UP / DOWN / LOCK MODE button held pressed for two seconds.
- When you want to reset the lock mode, keep the feed dog UP / DOWN / LOCK MODE button held pressed for two seconds.
- When turning off the machine, lock mode is disengaged.

www.sewshop.cu

4.2. Speed control

■ Speed controller

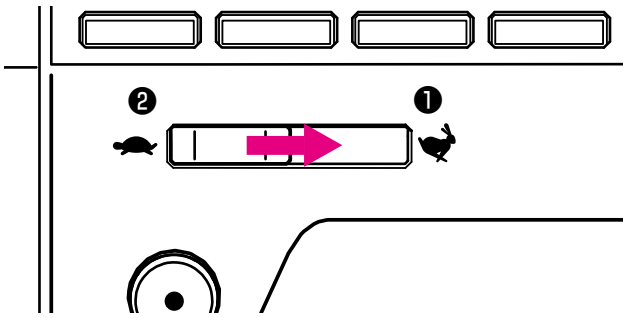

Maximum sewing speed can be freely set by the speed controller.

❶ : Faster speed

❷ : Slower speed

■ Foot controller

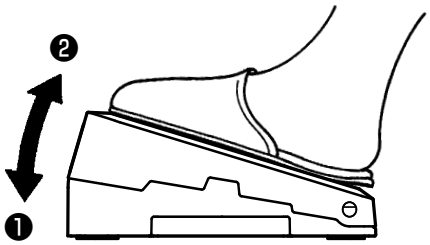

To run the machine, press the foot controller.
The harder you press, the faster the machine sews.
Speed controller will set the maximum sewing speed.

❶ Pressing harder → faster speed

❷ Pressing weaker → slower speed

* Always clean the foot controller.
It is important that you do not place any objects on the foot controller as it may cause injury to the user and may cause malfunctions.

■ Low-speed inching sewing

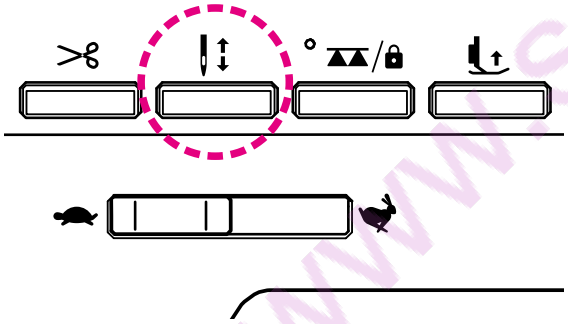

When the needle up/down switch is held pressed, the sewing machine performs sewing at a low speed.

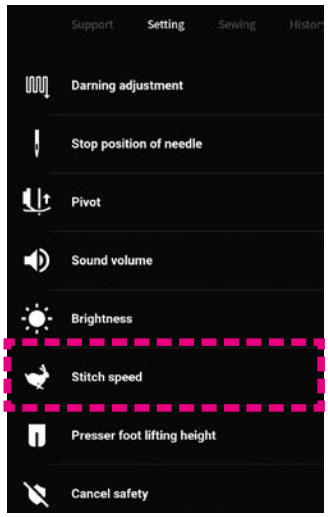

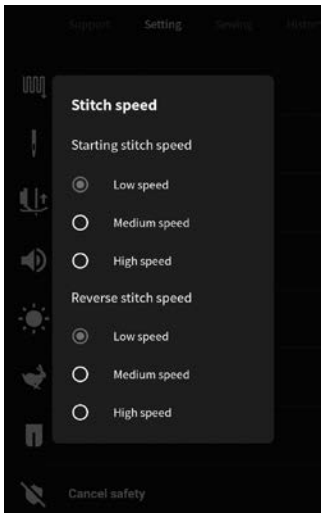

Setting > Stitch speed
Adjustable starting stitch speed
From the setting, the sewing speed at the start of sewing can be changed. (Refer to page 107)

Setting > Stitch speed
Adjustable reverse stitch speed
From the setting, the sewing speed for the reverse stitching can be changed. (Refer to page 107)

www.sewshop.eu

4.3. Lifting/lowering of the presser foot

■ Presser foot lifting lever

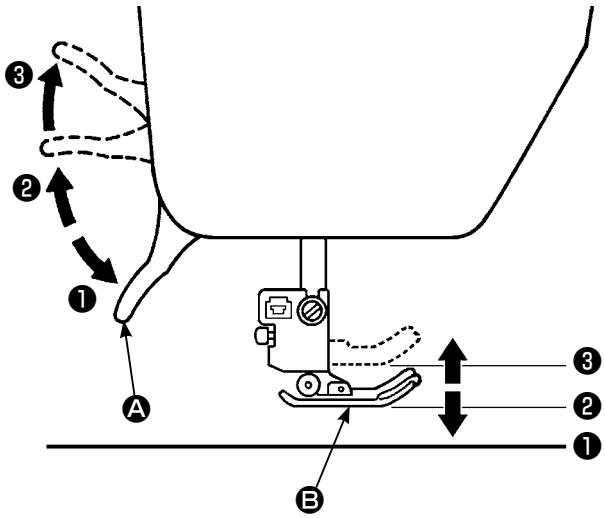

The presser foot Ⓑ is lifted/lowered with the presser foot lifting lever Ⓐ. The presser foot can be lifted higher than the ordinary lift position. This feature is useful when placing a heavy-weight material on the sewing machine.

Even after the presser foot has been lifted with the presser foot lifting lever, the presser foot can be lowered with the presser foot auto lift button.

❶ Lowered position…… Presser foot should be lowered when sewing.

❷ Ordinary lift position…… This position is used for fabric removal and/or changing the presser foot.

❸ Extra lift position……This position is used to put heavy materials underneath the presser foot.

* **Be careful that the presser foot and the needle should not interfere when the needle is in down position and the presser foot is raised to the extra lift position.**

■ Presser foot auto lift button

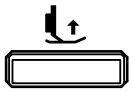

The presser foot can be lifted/lowered by pressing the presser foot auto lift button. (Refer to page 9)

Operation of the presser foot lifting lever is enabled by lifting the lever to position ❸ once after lifting the presser foot with the presser foot auto lift button.

■ Knee lifting lever

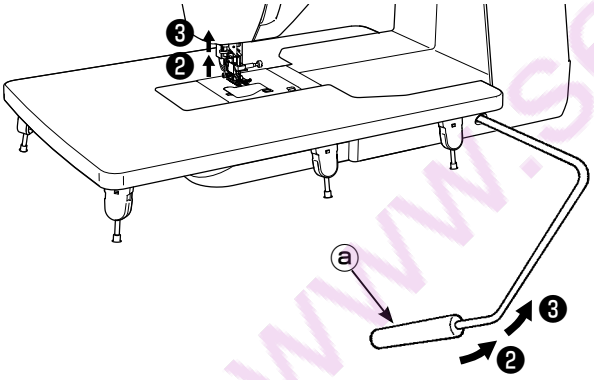

It is possible to lift and lower the presser foot with your knee instead of using your hands.

Push the lever ⓐ to right-hand side to lift the presser foot. The presser foot is lowered when the lever goes back to the original position.

The presser foot can be lifted to the extra lift position with the knee lifting lever as in the case of using the presser foot lifting lever.

Operation of the knee lifter lever is enabled by pressing the lever to the rightmost position after lifting the presser foot with the presser foot auto lift button.

* Do not touch the knee lifting lever while sewing. If you touch the knee lifter lever during sewing, the presser foot will go up causing a deformation in the pattern.

● Automatic lowering of the feed dog when lifting the presser foot

When you lift the presser foot to its extra lift position with the knee lifting lever, the feed dog automatically comes down to its lower position.

This feature is helpful for placing the material under the presser foot or removing it from there as well as preventing the material from being damaged since the material will not be caught in the feed dog.

■ Automatic presser foot lifting

Setting > Pivot setting

It is possible to set so that the presser foot goes up automatically with the needle kept at the lower position when the sewing machine is stopped.

Sewing > (Presser foot lift after trimming setting)

It is possible to set so that the presser foot goes up automatically after thread trimming.

www.sewshop.eu

4.4. Changing the presser foot

■ Removing and installing the presser foot

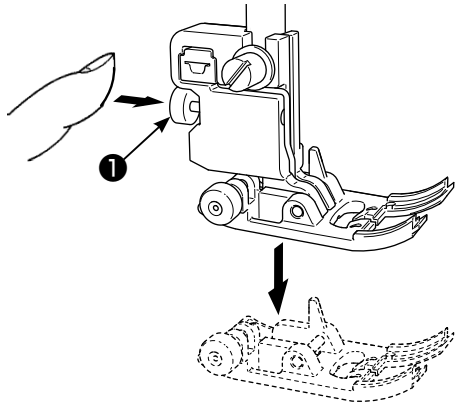

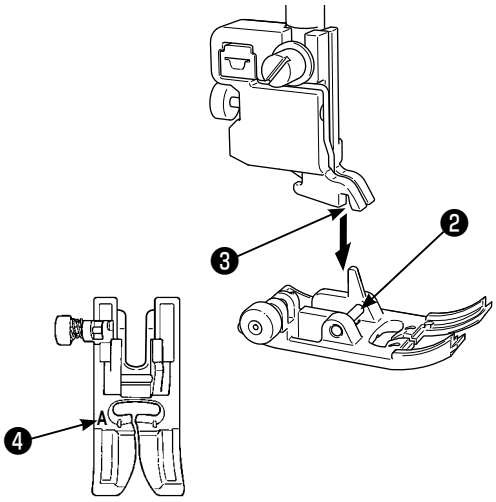

⚠ Leave the machine in Lock mode

● Removing presser foot

Raise the needle.
Move up the presser foot lifting lever.
Press the presser foot releasing button ❶ to remove the presser foot.

● Installing presser foot

Align the pin ❷ of the presser foot and the groove ❸ in the presser foot holder.
Move down the presser foot lifting lever.

* Each presser foot has a marking ❹ . Use the appropriate presser foot for the stitch pattern to be sewn.

■ Removing and installing presser foot holder

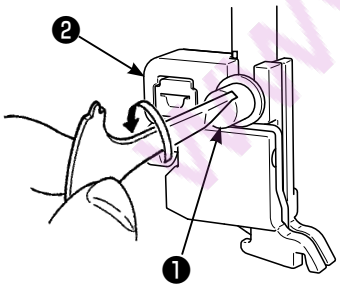

● Removing presser foot holder

Lift the needle and presser foot lifting lever.
Loosen the setscrew ❶ of the presser foot holder to the left and remove the presser foot holder ❷ .

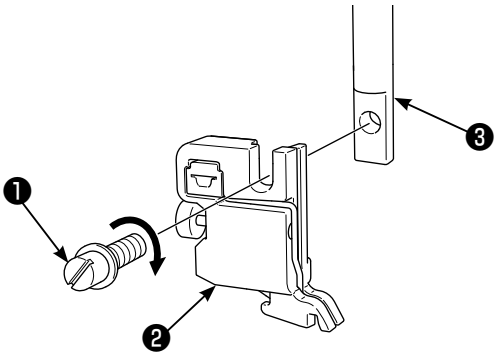

● Installing presser foot holder

Align the screw hole at the presser bar ❸ with the hole of presser foot holder ❷ (long groove).
Tighten the setscrew ❶ firmly by turning it to the right side.

www.sewshop.eu

■ The type and application of the presser foot

	Marking of presser foot ↓	
Standard presser foot	**A**	This is used mainly for straight stitch and zigzag stitches. Use this presser foot especially when sewing heavy-weight materials.
Zipper presser foot	**B**	This is used to attach zippers.
Overcasting presser foot	**C**	This presser foot is used exclusively for overcasting to prevent the cut edge of fabrics from fraying.
Blind stitch presser foot	**D**	This presser foot is used for blind stitch on hems of trousers and skirts, or sleeves.
Buttonhole presser foot	**E**	This presser foot is used for automatic buttonholing.
Manual buttonhole presser foot	**I**	This is used for sewing decorative stitches, letters and bartacks. Also for manual buttonhole (pattern No.102, No.103).
Patchwork presser foot	**P**	This presser foot is used for patchwork stitches. There are two seam lines, 1/4-inch and 1/8-inch from center needle position.
Open toe presser foot	**O**	This is used for the applique and decorative stitches. (Front part of the presser foot is open for better visibility.)
Quilt presser foot (for the ruler)	**Q**	This is used for the quilt stitch. (Machine setting: Straight Stitch and Center needle position) The ruler can be used together with the quilt presser foot.
Edge Sewing presser foot	**R**	This presser foot is used for patchwork, etc. Use the guide at the center of the edge sewing foot for sewing the center of the joining part of two pieces of materials.
Straight presser foot	**S**	Use this presser foot when using the throat plate for straight stitch.
7mm guide foot or 1/4” guide foot	**7**	This guide presser foot is provided with a guide for 7-mm or 1/4-inch seam allowance for piecing.

www.sewshop.eu

4.5. Placing and releasing “JUKI Smart Feed”

“JUKI Smart Feed” is used when sewing the materials (knit, jersey, vinyl cloth, artificial leather, etc.) that are generally hard to be fed, and the materials (quilt, etc.) that are likely to cause uneven material feed.
“JUKI Smart Feed” can only be used for sewing limited types of patterns.
Refer to “12. List of stitch patterns” for the patterns that can be sewn with the “JUKI Smart Feed”.

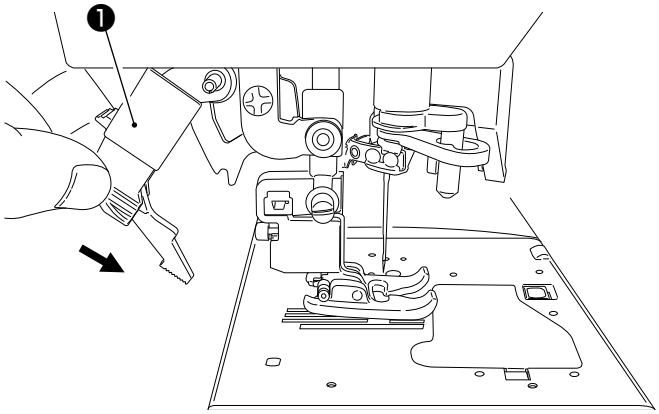

● Placing “JUKI Smart Feed”

Raise the presser foot.
Fully lower “JUKI Smart Feed” ❶ while pinching it with fingers.
When “JUKI Smart Feed” is fitted appropriately, the relevant icon is displayed on the screen.

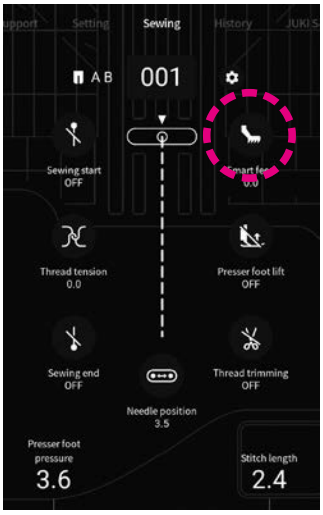

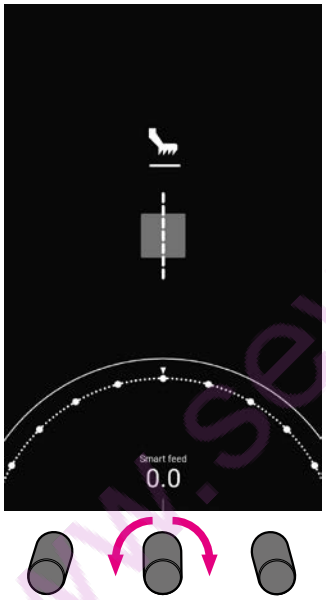

● Adjusting “JUKI Smart Feed”

Press .

Adjust the “JUKI Smart Feed” by sliding your finger on the scale mark part.
The “JUKI Smart Feed” can also be adjusted by turning the adjusting dial.
(Setting range: -5.0 - 5.0)

The top feed amount is decreased.

The top feed amount is increased.

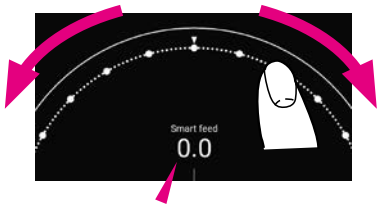

White: Initial value
Blue: Changed value

When you tap the portion above the semicircular portion shown in the above-given figure, the setting you have done is confirmed. Then, the screen returns to the previous screen.

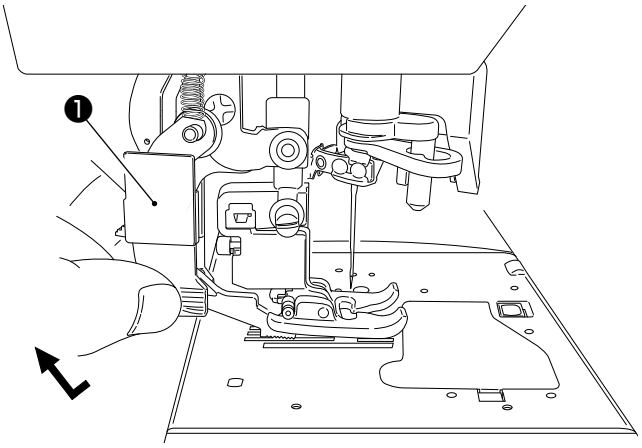

● Releasing “JUKI Smart Feed”

Raise the presser foot.
Pinching “JUKI Smart Feed” ❶ , pull it down and push backward until it is brought to its upper position.

www.sewshop.eu

4.6. Changing the throat plate and the feed dog

The normal throat plate and feed dog can be changed to the throat plate and feed dog for straight stitch.
In the case of starting sewing from the edge of material, the material can be smoothly fed without being pulled into the needle hole by changing the throat plate and feed dog to those for straight stitch.

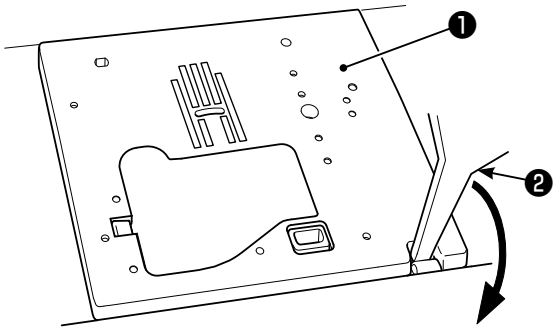

⚠ Turn off the machine or leave the Machine in Lock Mode

● Removing the throat plate

Remove the presser foot and needle.
Push the T-shape screwdriver ❷ into the groove in front of the throat plate ❶ . When pressing the screw-driver downward, throat plate will come off.

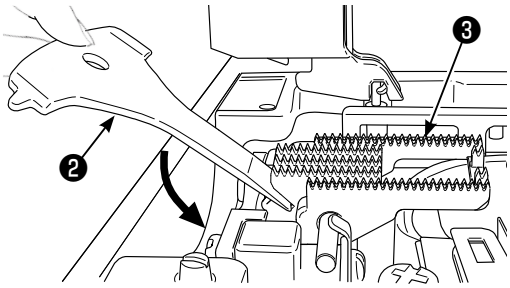

● Removing the feed dog

Push the T-shape screwdriver ❷ into the groove in the back of the feed dog ❸ . When pressing the screw-driver downward, feed dog will come off.

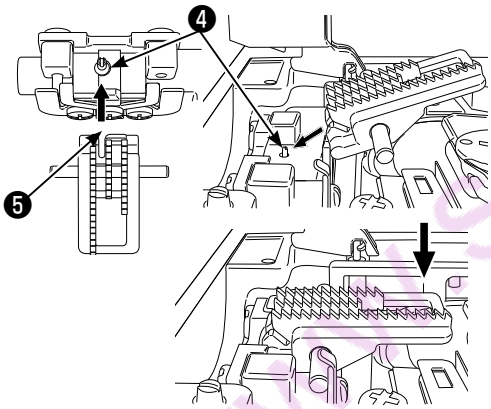

● Attaching the feed dog

Follow the angle in the sketch and place the feed dog so that the pins ❹ of the feed dog meet the groove ❺ in the back of feed dog.
Press down the front part of feed dog and engage the feed dog.

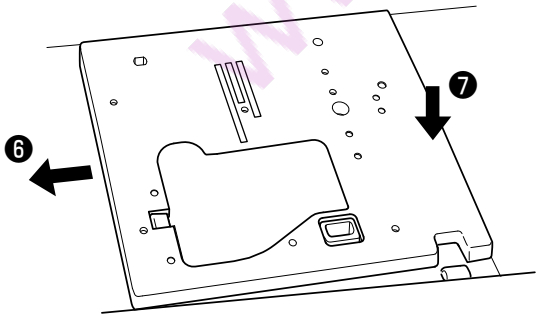

● Attaching the throat plate

Place the area (❻) first and then push center to right hand part of the throat plate to assemble (❼).

● Patterns that can be sewn with the throat plate for straight stitch

001	004	030	418	419	420

Once the throat plate and feed dog for straight stitch are installed, the limited types of patterns that can be sewn with them can be selected.

www.sewshop.eu

4.7. How to use the throat plate for straight stitch

The throat plate is provided with a useful guide for you to determine the sewing position of material.

Standard throat plate

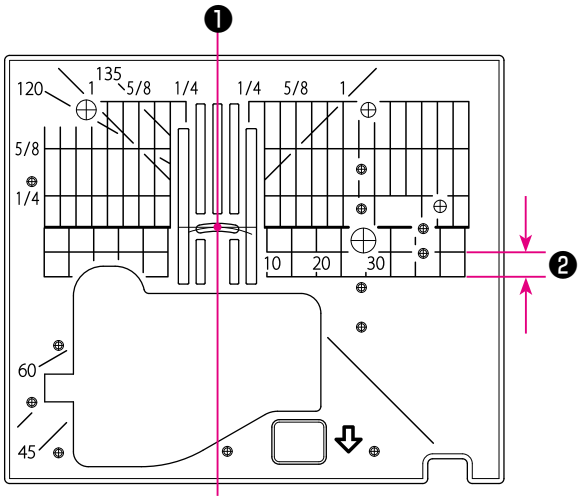

Throat plate for straight stitches

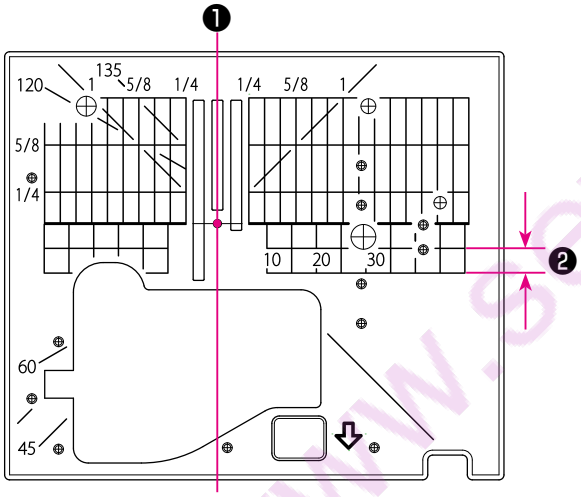

● Guide lines

It is possible to sew the material from its edge by sewing the material while aligning its edge with the guide line on the throat plate.

❶ On center needle position basis
❷ 5 mm

* Numbers on the guide line show the distance in mm and inches between the center needle position and the guide line.

Numbers, 7, 10 and 20 are millimeter.
Numbers, 1/ 4, 5/ 8 and 1 are inches.

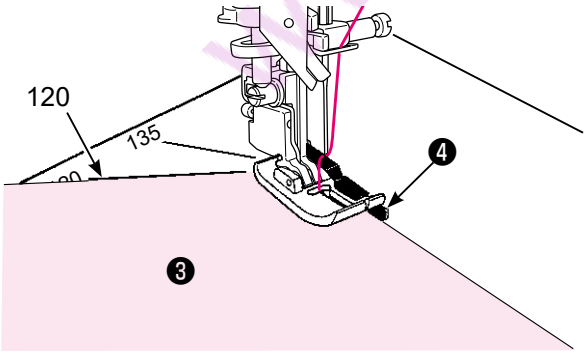

● Angle index

The angle index is useful when using it for piecing of patchworks.
If you align the material edge with the angle index which is same of the angle of patchwork (piece) corner ❸ , you will know the start and end positions while setting the seam allowance to 7 mm without marking the material.

❹ Guide

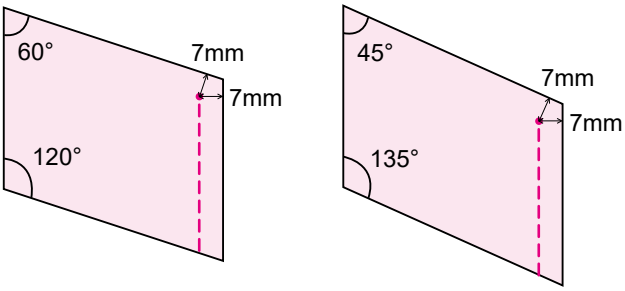

www.sewshop.eu

4.8. Attaching the needle

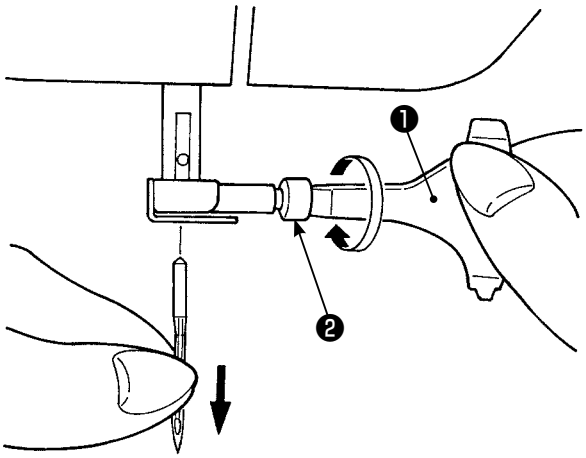

⚠ Turn off the machine or leave the Machine in Lock Mode

● Removing needle

Turn the hand wheel towards you until the needle comes to the highest position and lower the presser foot.
Turn the needle setscrew ❷ towards you 1-2 times and remove the needle.

❶ T-shape screwdriver

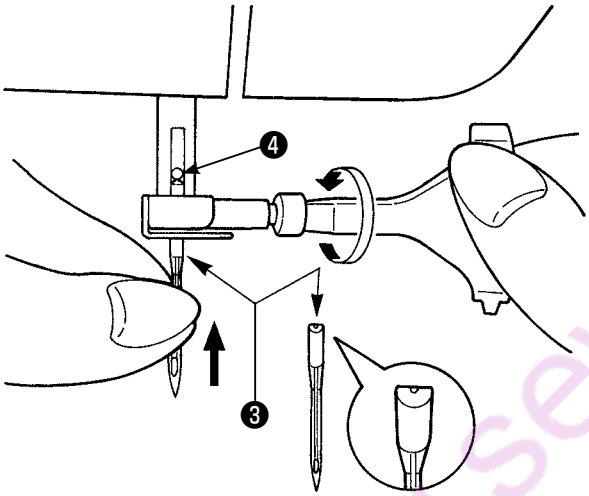

● Attaching the needle

Hold the needle with its flat part facing away from you (❸), and insert it fully until it touches the stopper pin ❹.
Securely tighten the needle setscrew.
The needle cannot be inserted unless it is correctly positioned.

● Needles to be purchased

When purchasing spare needles, specify HA×1 (130/705H) or HA×1 SP (needle for knits) .

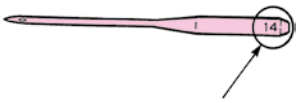

Needle size:

The larger the number, the thicker the needle.

● Checking the needle

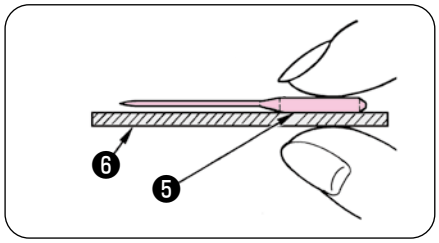

Check the needle for its straightness occasionally.
Any bent needle would cause skipped stitches, thread breakage or damage to materials.

❺ The flat part of the needle
❻ Flat object

⚠ Attention: **If the needle is not properly installed or a bent needle is used, needle breakage can be caused. It will cause damage to the machine.**

www.sewshop.eu

4.9. Fabric, thread and needle table

	Fabric	Thread	Needle
			HA×1
Light-weight materials	Lawn	Silk thread ..... No.80,90 Spun thread No.80,90	No.11
	Georgette		
	Tricot	Spun thread No.60-90	Knit needle No.11
	Wool and synthetic fabrics	Silk thread ..... No.80 Spun thread No.60-90	No.11-14
Medium-weight materials	Cotton and synthetic fabrics	Spun thread No.50, 60	No.11-14
	Light jersey	Silk thread ..... No.50 Spun thread No.50, 60	Knit needle No.11
	Ordinary wool and synthetic fabrics	Silk thread ..... No.50 Spun thread No.50, 60	No.11-14
Heavy-weight materials	Denim	Spun thread No.30-50	No.14-16
	Jersey	Silk thread ..... No.50 Spun thread No.50, 60	Knit needle No.11-14
	Coat	Silk thread No.50	No.11-14

* In general, the same thread is used for both needle and bobbin threads.
* Thin thread and needle will be used for light-weight fabrics and thick thread and needle will be used for heavy-weight materials.
* Check that the combination of needle and thread is OK by trial sewing on the material which will be sewn.
* Knit needle is good for stretchy fabrics (such as knits) and synthetic fabrics.
* Use thread No. 30 - 90.
* When it is difficult to go over an overlapped section, guide the fabric by hand.
* When sewing “quilt patterns”, “decorative patterns” or “letters”, better finish will be ensured by using a knit needle.

www.sewshop.eu

4.10. Bobbin thread preparation

■ Winding a bobbin

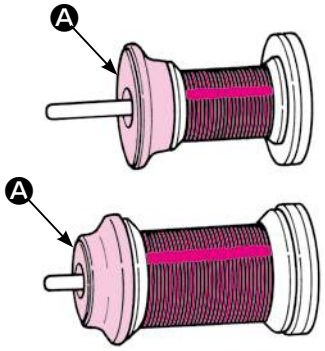

● **In the case of using the spool pin**

1 **Place the thread spool to the spool pin.**

There are three types of the spool caps Ⓐ, large, medium and small.
Select the size of spool cap according to the thread spool to be used and use it while changing its direction appropriately.

*** Be aware that a spool with a small remaining amount of thread can cause tangling or slip-off of thread.**

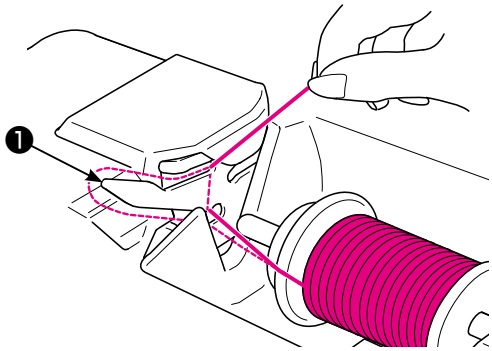

2 **Thread the guide ❶ .**

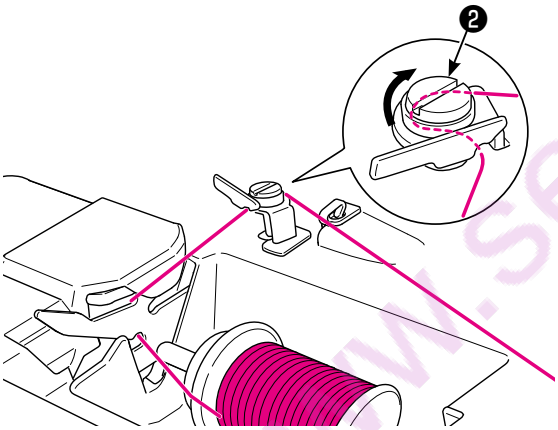

3 **Thread the thread guide ❷ (guide in the circle) .**
Pull the thread by both hands and thread it to bobbin winding thread guide.

● **In the case of using the auxiliary spool pin**

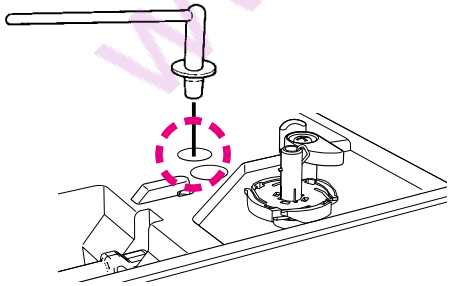

1 **Place the auxiliary spool pin.**

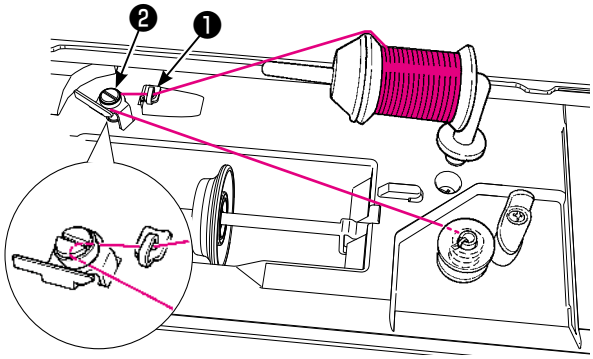

2 **Place the thread spool to the auxiliary spool pin.**

3 **Pass the thread through thread guide ❶ . Then, pass the thread through thread guide for bobbin winding ❷ .**
Pull the thread by both hands and thread it to bobbin winding thread guide.

www.sewshop.eu

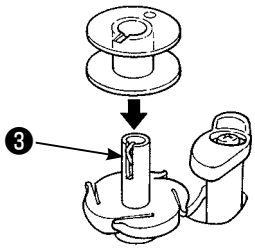

4 Set the bobbin on the bobbin winding shaft ❸ .

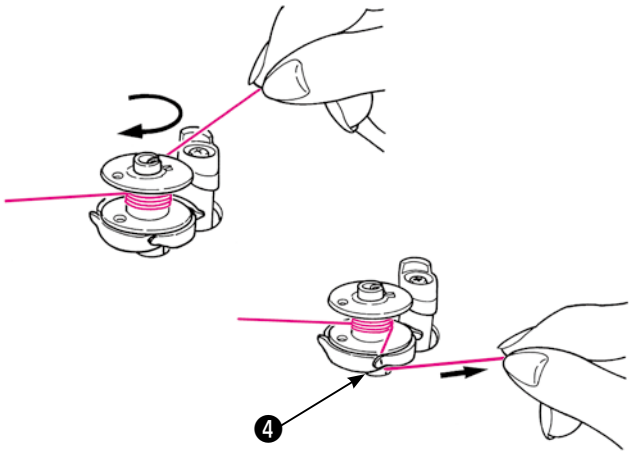

5 Wind the thread on the upper part of the bobbin by four to five turns in the clockwise direction while taking care not to allow the thread coming from the bobbin winding thread guide to loosen.

Put the thread end into the guide ❹ at the bobbin winding shaft and pull it to the right side to cut it.

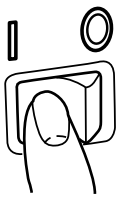

6 Turn the power ON.

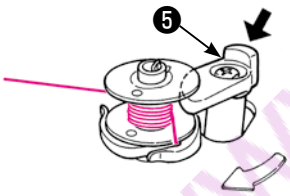

7 Push the bobbin winding regulator ❺ towards the bobbin to start winding the bobbin.

* Be careful that the bobbin winding regulator works as a switch.

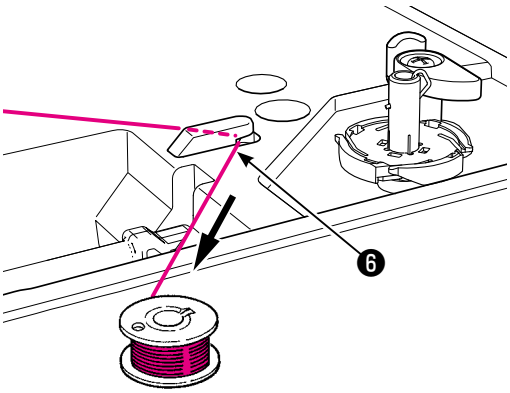

8 When winding is finished, the shaft stops automatically, the bobbin winding regulator moves to right and return to the original position.
Remove the bobbin from the bobbin winding shaft and cut the thread by cutter ❻ .

* Bobbin winding will automatically stop even while winding, when the winding speed is reduced due to a load to the bobbin winding motor caused by thread tangling.
* The bobbin winder automatically stops for the sake of safety after it has turned continuously at a certain period of time.

www.sewshop.eu

■ Placing the bobbin

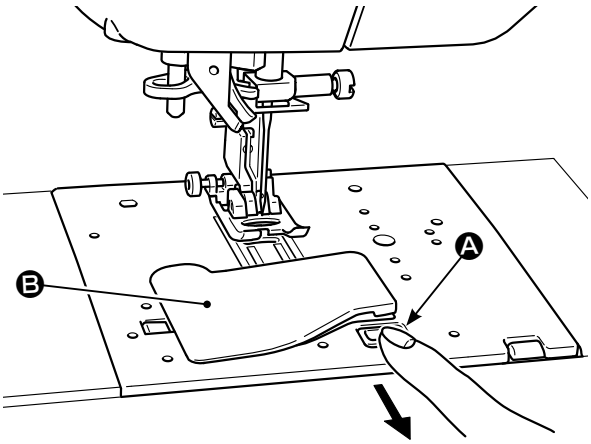

⚠ Turn off the machine or leave the Machine in Lock Mode

1 Pull forward hook cover release button Ⓐ and open the hook cover Ⓑ.

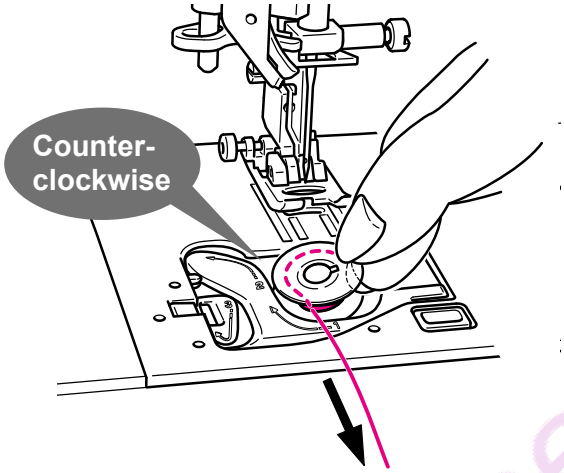

2 Put the bobbin in the bobbin case.

* Place the bobbin so that thread winds counter-clockwise.

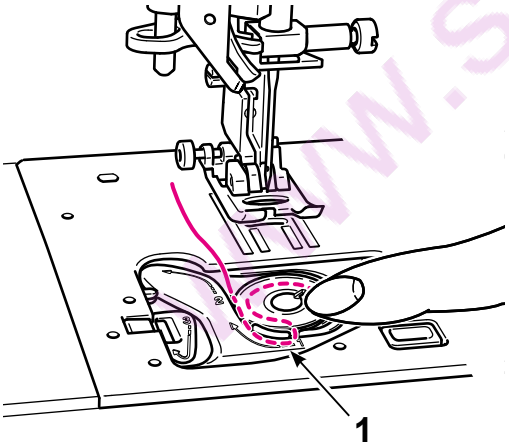

3 Thread groove and 1 by pulling the thread end.

* It will be easier to thread grooves when you press the bobbin lightly with your finger.

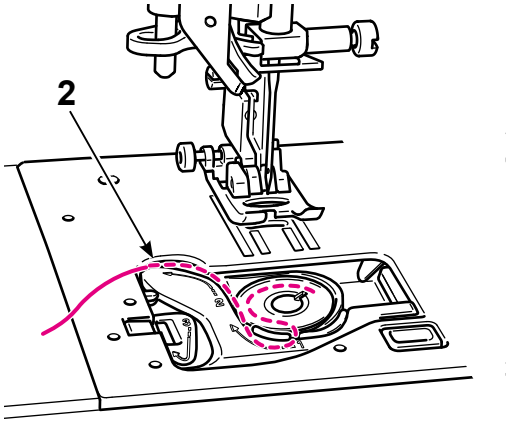

4 Thread guide 2 by pulling the thread to left side.

www.sewshop.eu

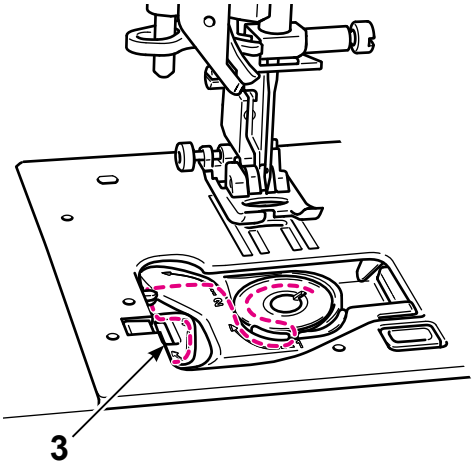

5 Thread 3 .

* When pulling bobbin thread, bobbin rotates counterclockwise. If bobbin rotates clockwise, put the bobbin upside down.

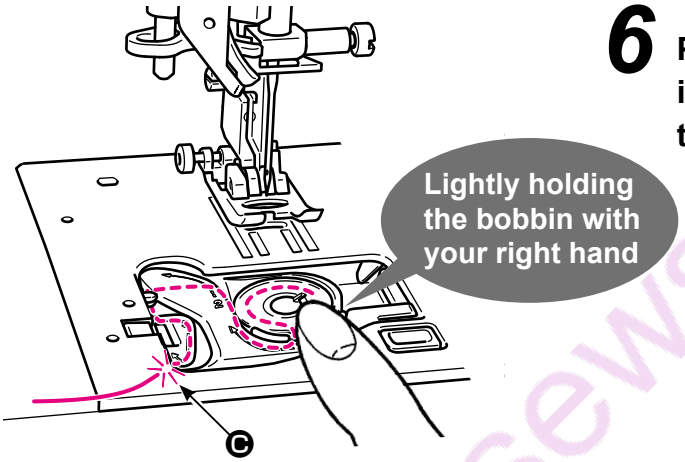

6 Pull the thread along the guide until built-in cutter C is reached. Finally, trim the thread with built-in cutter C.

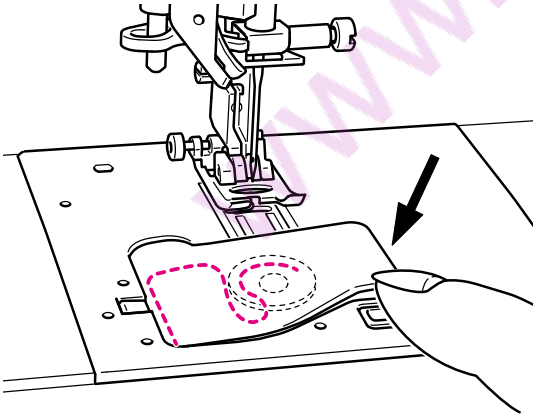

7 Close the hook cover.

You can start to sew in this condition (without pulling up the bobbin thread), however, if you want to sew with the bobbin thread pulled out, refer to “Pulling up the bobbin thread” in the page 35.

www.sewshop.eu

4.11. Needle thread preparation

■ Preparation

⚠ Turn off the machine

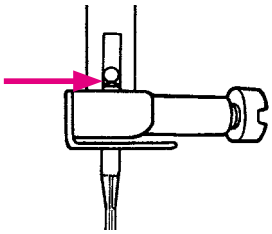

1 **Make sure to push the needle to the top.**

If the needle is not attached appropriately, the needle cannot be threaded with the automatic needle threader.

*** Use the needle: No.11-16 and the thread: No.30-90.**

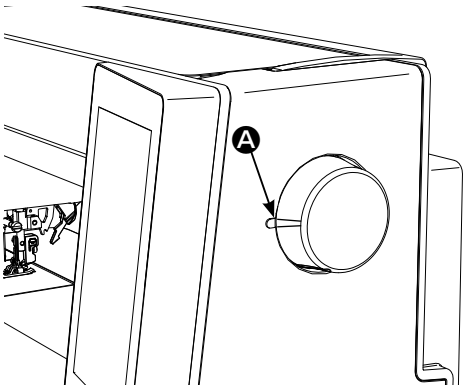

2 **Align the marking Ⓐ at the hand wheel with the one on the machine body.**

3 **Turn the power ON.**

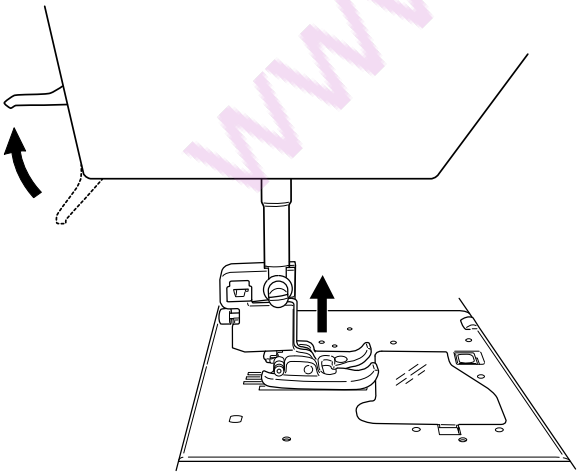

4 **Lift the presser foot.**

*** You can thread the machine correctly on condition that the machine is turned on and presser foot is up position.**

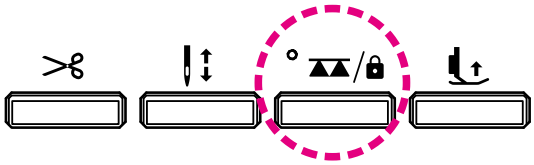

5 **Keep the feed UP / DOWN / LOCK MODE button held pressed to put the sewing machine in the lock mode.**

www.sewshop.eu

■ Threading the needle thread

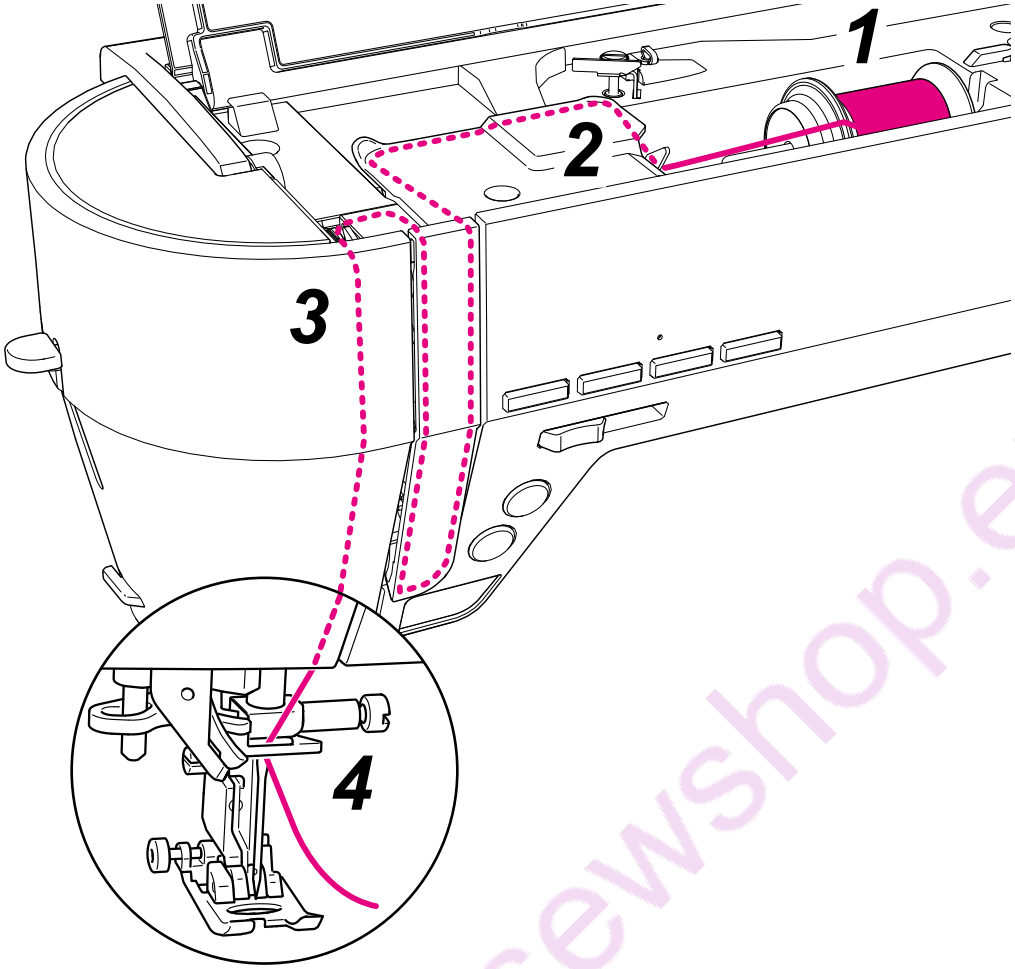

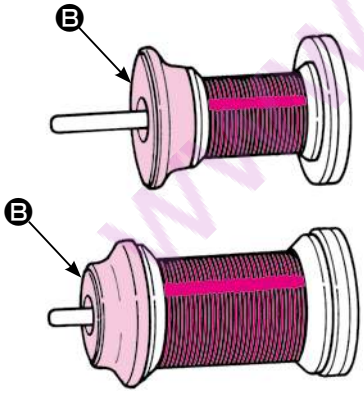

1 Place the thread spool to the spool pin.

There are three types of the spool caps Ⓑ, large, medium and small.
Select the size of spool cap according to the thread spool to be used and use it while changing its direction appropriately.

* **Be aware that a spool with a small remaining amount of thread can cause tangling or slip-off of thread.**

www.sewshop.eu

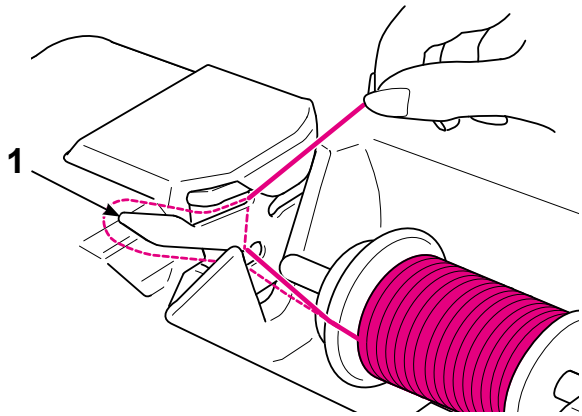

2 Thread to guide 1.

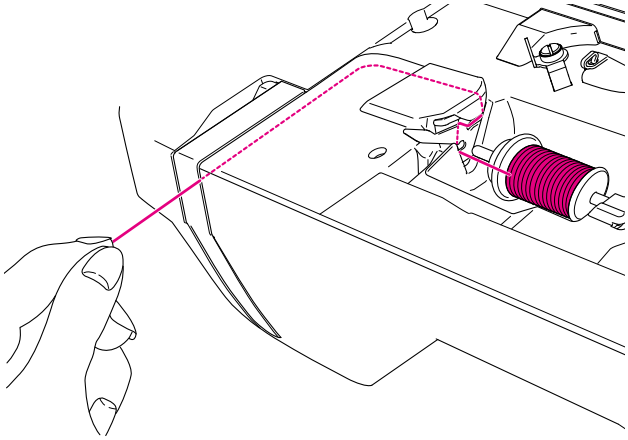

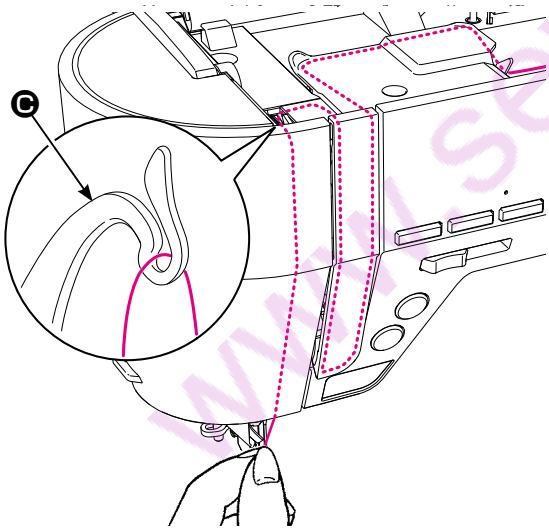

3 Hold the thread end and thread according to the arrow marking.

* Check that the thread take-up Ⓒ is correctly threaded.

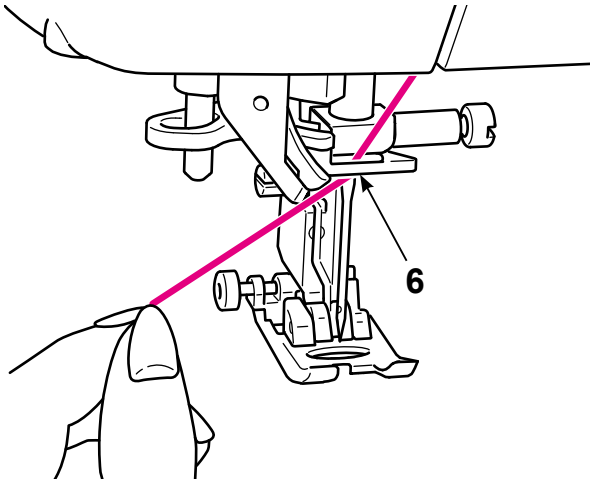

4 Thread the guide 6 from the right-hand side.

Draw the needle thread out from the guide by approximately 10 cm.

www.sewshop.eu

■ Automatic needle threader

⚠ Turn off the machine or leave the Machine in Lock Mode

* **When twin needle is used, the automatic needle threader can not be used.**
* **Use the needle: No.11-16 and the thread: No.30-90.**

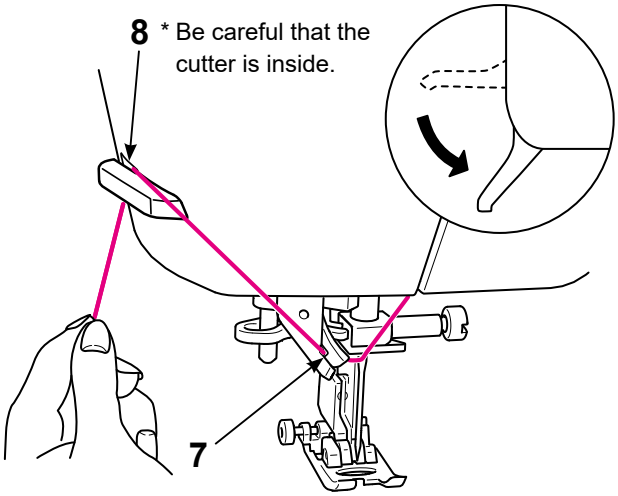

1 **Lower the presser foot with the presser foot lifting lever.**

* **The automatic needle threader sometimes fails to thread the needle when the presser foot is raised.**

2 **Thread to 7 and cut the thread with the thread cutter 8.**

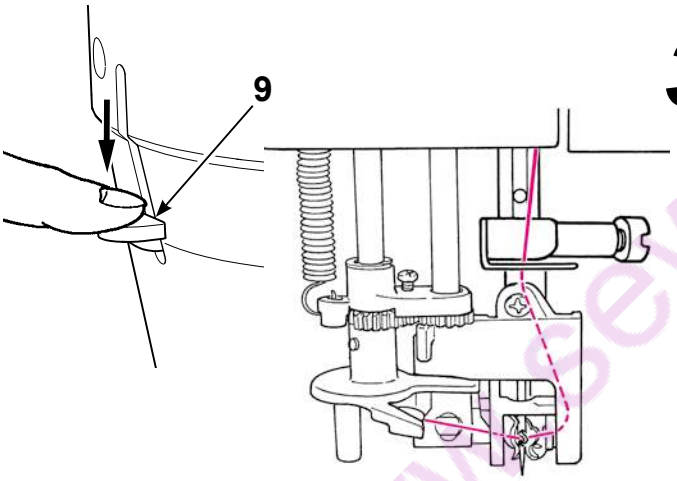

3 **Lower the threading lever 9 until it comes to a complete stop.**

* **Lower the threading lever slowly.**

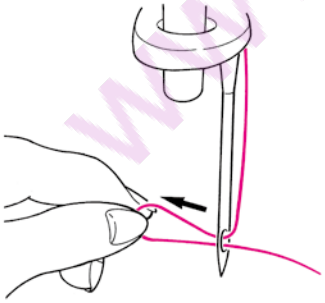

4 **Pull the thread loop away from you and draw the thread end through the needle eyelet.**

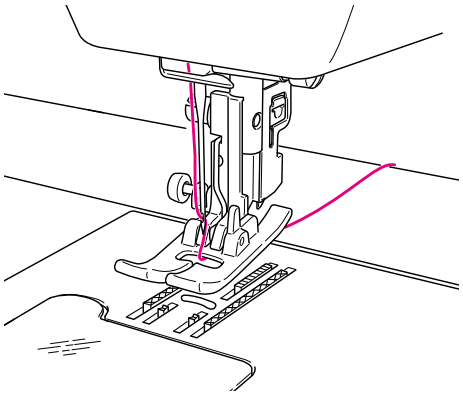

5 **Lift the presser foot. Then, draw the needle thread backward.**
Pull out the thread from the needle eye by approx.10 cm or 4 inches long.

It is possible to start sewing without pulling up the bobbin thread.

www.sewshop.eu

■ Pulling up the bobbin thread

Basic operation:
You can start to sew without pulling up the bobbin thread, however, if you want to sew with the bobbin thread pulled out, follow the directions below.

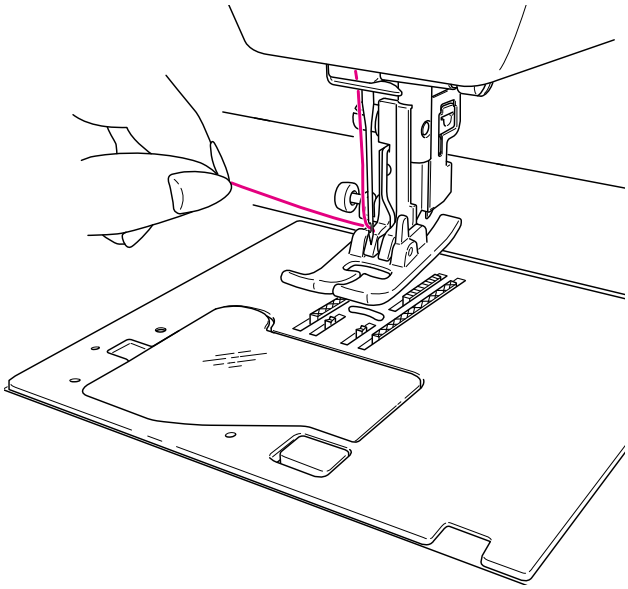

1 **Lift the presser foot and lightly hold the end of the needle thread.**

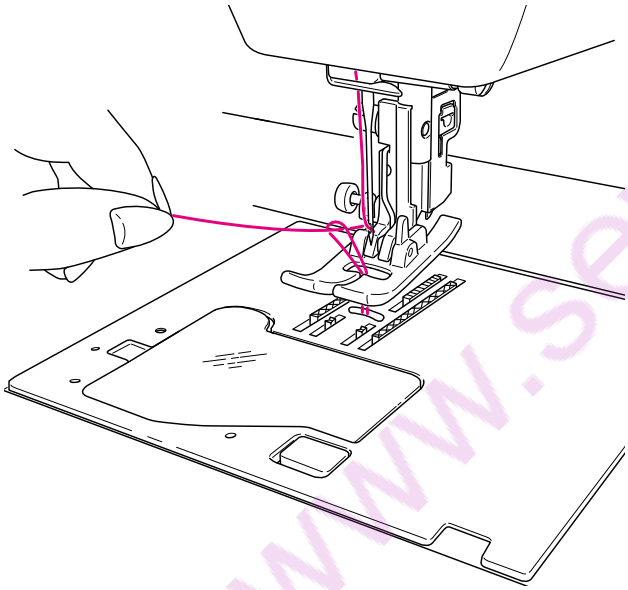

2 **Turn the hand wheel towards you to move the needle up and down. Loop of bobbin thread will be pulled out when you will pull the needle thread lightly.**

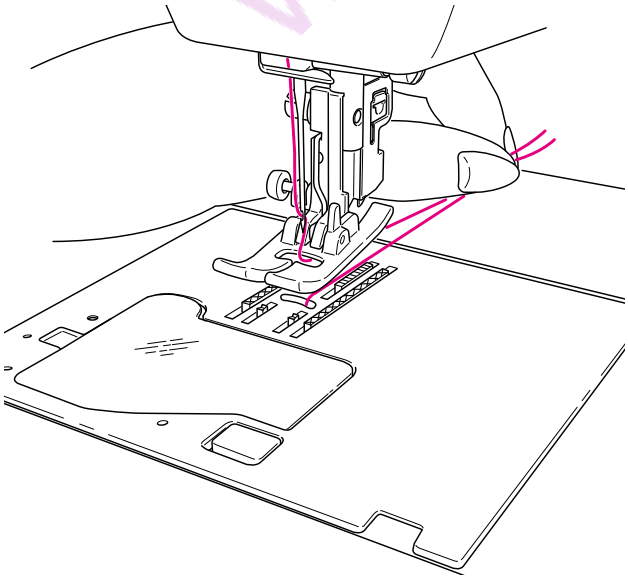

3 **Pull out both needle and bobbin threads by approx. 10 cm (4 inches) long and pass them under the presser foot towards the back of the machine.**

www.sewshop.eu

4.12. How to adjust thread tension

If the thread tension is not adjusted correctly, seam balance will be lost resulting in puckering or thread breakage. Default setting is suitable for most fabrics. Adjustment may be necessary according to fabrics and sewing applications. Thread tension can be changed even during sewing.

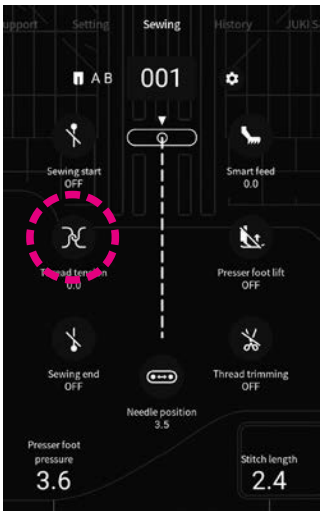

Press .

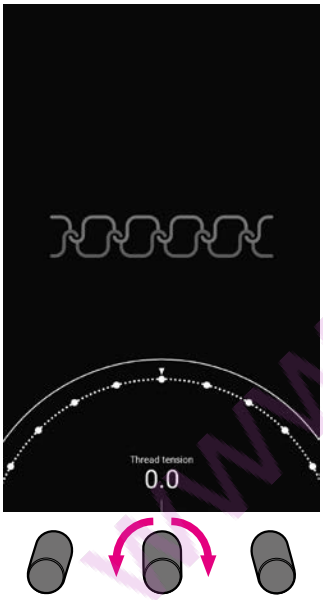

Adjust the thread tension by sliding your finger on the scale mark part.
The thread tension can also be adjusted by turning the adjusting dial.
(Setting range: -5.0 - 5.0)

The needle thread tension is decreased.

The needle thread tension is increased.

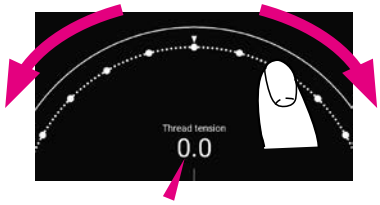

White: Initial value
Blue: Changed value

When you tap the portion above the semicircular portion shown in the above-given figure, the setting you have done is confirmed. Then, the screen returns to the previous screen.

* **If a new pattern is selected, the set value will be returned to the initial value.**

www.sewshop.eu

■ Well-balanced thread tension

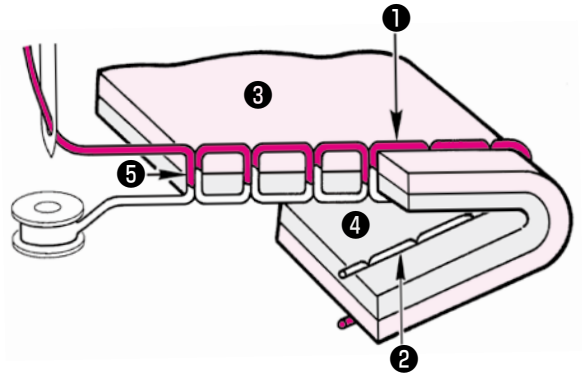

<In the case of straight stitch>

The needle thread and the bobbin thread interlace with each other approximately at the middle of material thickness.

❶ Needle thread
❷ Bobbin thread
❸ Fabric (right side)
❹ Fabric (wrong side)
❺ Middle of the fabric thickness

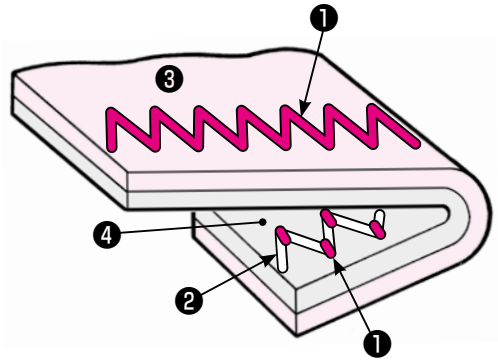

<In the case of zigzag stitch>

The needle thread is pulled a little bit to the wrong side of material.

■ When the needle thread is too strong

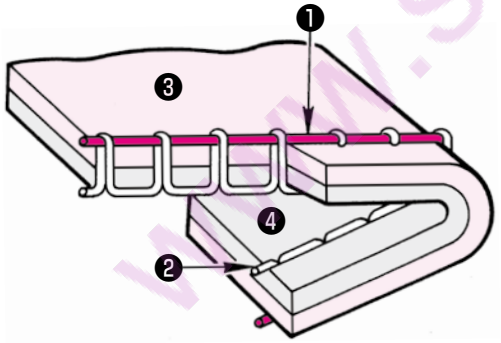

The bobbin thread will be pulled to the front side of the fabric. In this case, decrease the thread tension value (to decrease the needle thread tension).

■ When the needle thread is too low

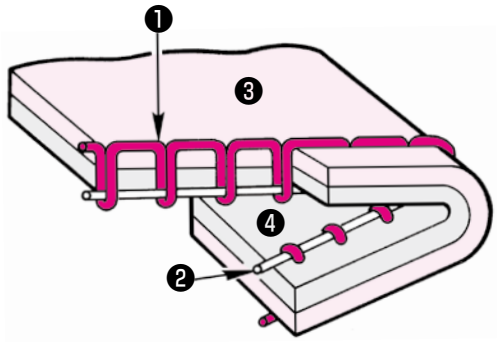

The needle thread will be pulled to the wrong side of fabric. In this case, increase the thread tension value (to increase the needle thread tension).

www.sewshop.eu

4.13. Setting the presser foot pressure

Presser foot pressure can be changed even during sewing.

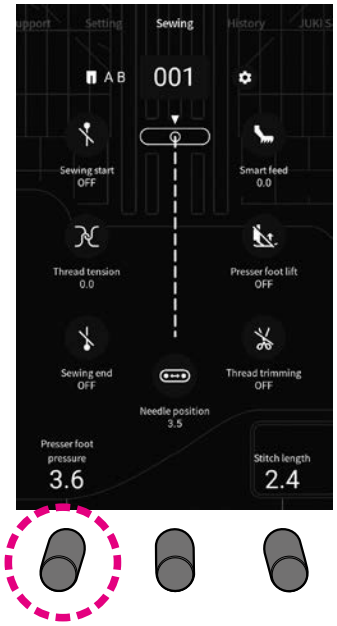

Set the presser foot pressure by turning the adjusting dial located below the indication [Presser foot pressure].
(Setting range: 0 - 5)

Set the presser foot pressure to “3.6” (initial value) in the case of standard stitching.
Set the presser foot pressure to a smaller value (decrease the presser foot pressure) in the case of sewing light-weight synthetic materials or elastic materials, and sewing applique, quilt and curve sections of materials, since in that case uneven material feed is likely to occur.

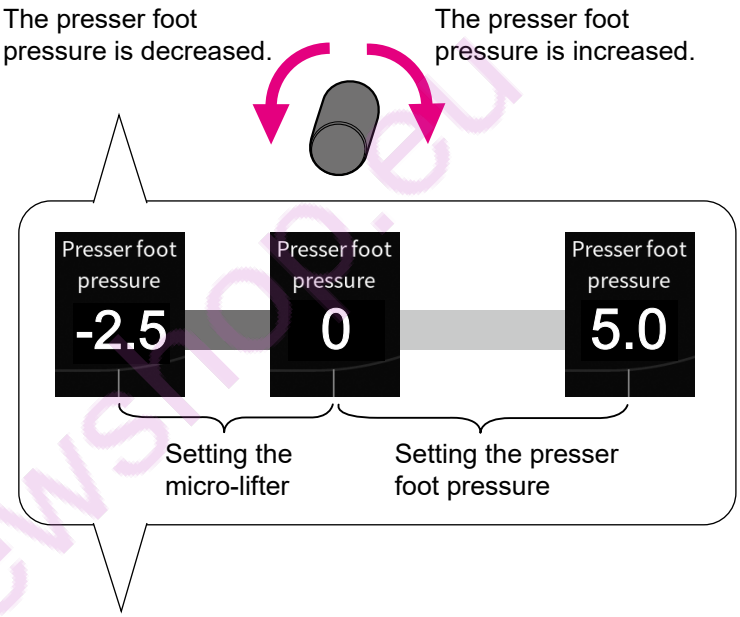

4.14. Setting the micro-lifter

It is possible to sew the material with the presser foot slightly lifted according to the material thickness.
The micro-lifter function is used for sewing materials such as quilt and velvet that are likely to cause uneven material feed.
Micro-lifter lifting height can be changed even during sewing.

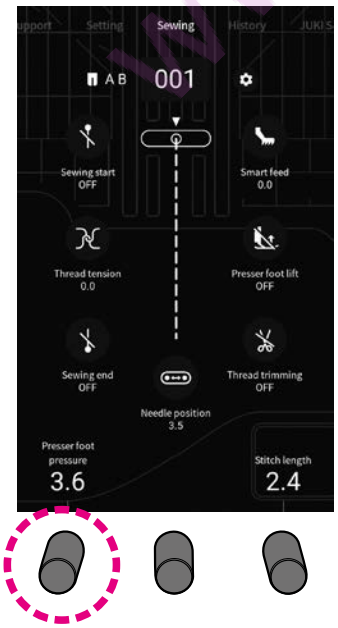

Adjust the presser foot height by adjusting the presser foot pressure value.

Set the presser foot height by turning the adjusting dial located below the indication [Presser foot pressure].
(Setting range: -2.5 - 0)

In the case it is not necessary to slightly lift the presser foot during sewing, set the presser foot height for the micro-lifter function to “0”.
Set the presser foot height by turning the adjusting dial so that the presser foot appropriately holds the material. The larger the negative set value becomes, the higher the presser foot can be lifted.

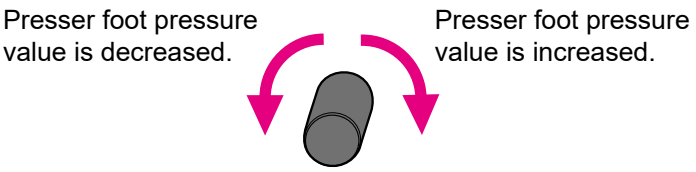

Place the material (for trial stitching) that is the same with the material to be actually sewn. Then, adjust the presser foot height and carry out trial stitching.
Be aware, if the presser foot is lifted excessively during sewing, the material cannot be fed resulting in thread entanglement.

www.sewshop.eu

4.15. Setting the automatic back tacking, thread trimming and presser foot lifting

The back tacking at the beginning and end of sewing and the back tacking and thread trimming / presser foot lift after thread trimming at the end of sewing can be set.

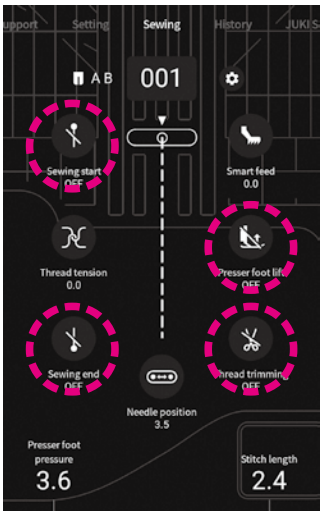

Select a pattern. Set operations of the sewing machine by pressing the relevant button on the screen.

Setting for the back tacking at the beginning of sewing Select one from the three types of back tacking. : OFF : Reverse stitch : Lock stitch
Setting for the back tacking at the end of sewing Select one from the three types of back tacking. : OFF : Reverse stitch : Lock stitch
Presser foot lift after thread trimming : OFF The presser foot is not lifted after thread trimming : ON The presser foot is lifted after thread trimming
Back tacking and thread trimming : OFF Thread trimming is not carried out : ON Thread trimming is carried out

● In the case of setting the automatic back tacking

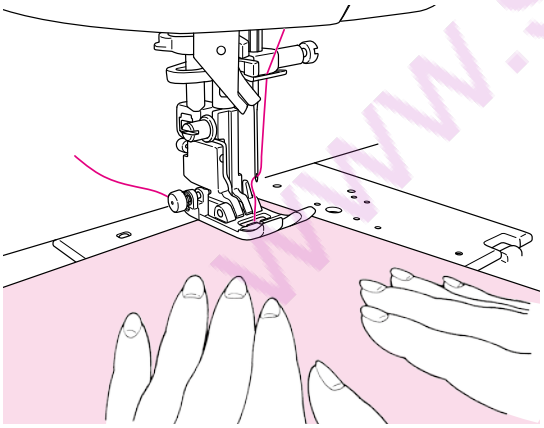

Sewing start

Place the material at the sewing start position and begin sewing. In the case the back tacking at the beginning of sewing is selected, the reverse stitch button and back tacking button will not operate.

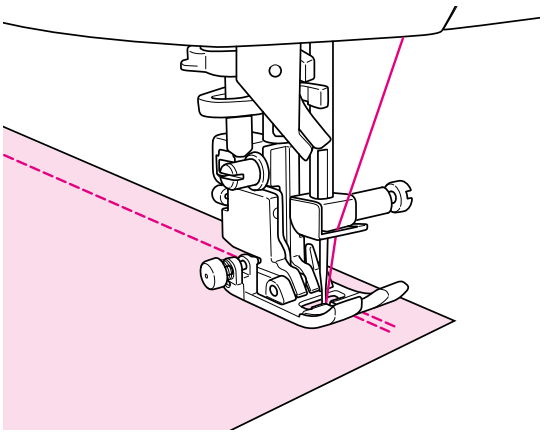

Sewing end

Press the button which corresponds to the type of back tacking you have selected.

(/)

Even if you press the button that does not correspond to the type of back tacking you have selected, the back tacking you have selected will be carried out.

www.sewshop.eu

4.16. When changing the needle position

The needle position can be changed even during sewing.

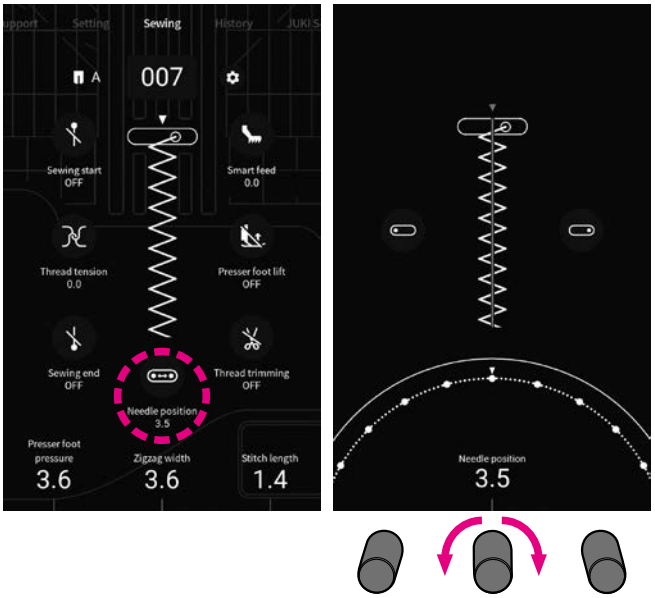

Press .

Change the needle position by sliding your finger on the scale mark part.
The needle position can also be changed by turning the adjusting dial.

The needle is moved to the left.

The needle is moved to the right.

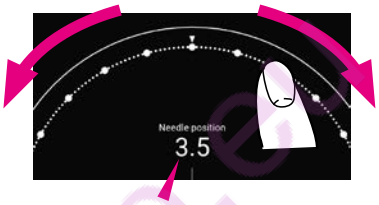

White: Initial value
Blue: Changed value

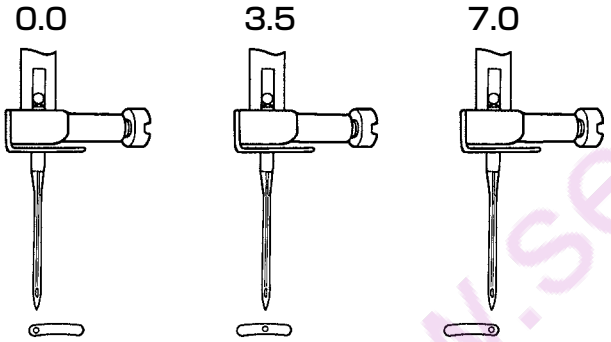

When you press , the needle is brought to the left-most position.

When you press , the needle is brought to the right-most position.

The leftmost end represents “0.0” The rightmost end represents “7.0”.

The needle position is represented by ▼ of .

Numeric values displayed on the screen: In mm

When you tap the portion above the semicircular portion shown in the above-given figure, the setting you have done is confirmed. Then, the screen returns to the previous screen.

* **If a new pattern is selected, the set value will be returned to the initial value.**

www.sewshop.e

4.17. When changing the zigzag width

Zigzag width can be changed even during sewing.

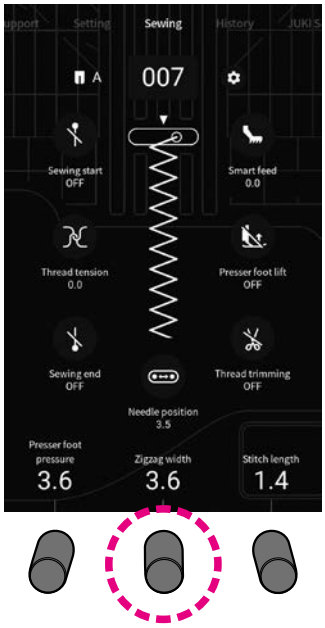

Change zigzag width Ⓐ by turning the adjusting dial located below the indication [Zigzag width].

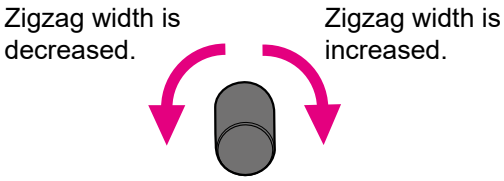

The displayed numeric value is decreased and the zigzag width is decreased by turning the dial counterclockwise.
The displayed numeric value is increased and the zigzag width is increased by turning the dial clockwise.
The zigzag width can be adjusted while sewing.

Numeric values displayed on the screen: Measure of the zigzag width (In mm)

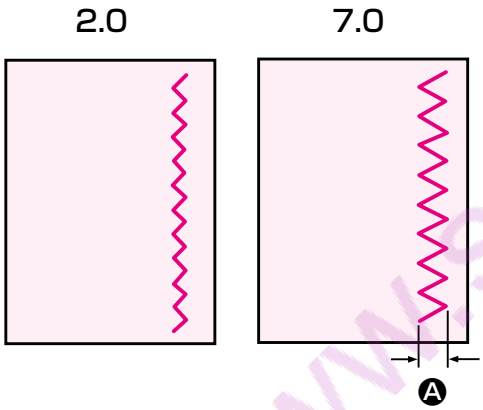

www.sewshop.eu

4.18. When changing the stitch length

Stitch length can be changed even during sewing.

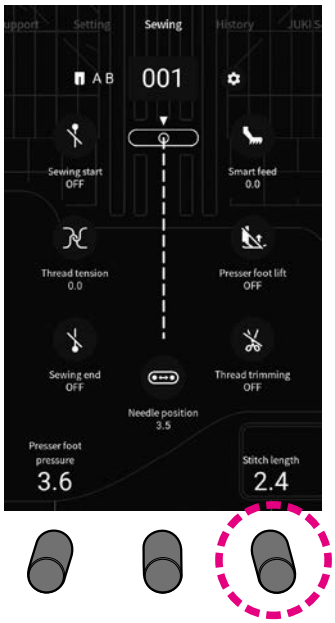

Change the stitch length by turning the adjusting dial located below the indication [Stitch length].

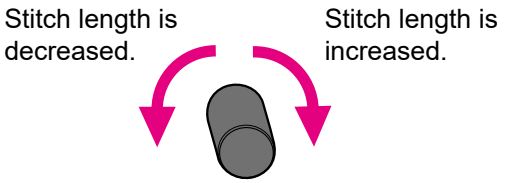

The displayed numeric value is decreased and the stitch length is decreased by turning the dial counterclockwise. The displayed numeric value is increased and the stitch length is increased by turning the dial clockwise.

Numeric values displayed on the screen: Measure of the stitch length (In mm)

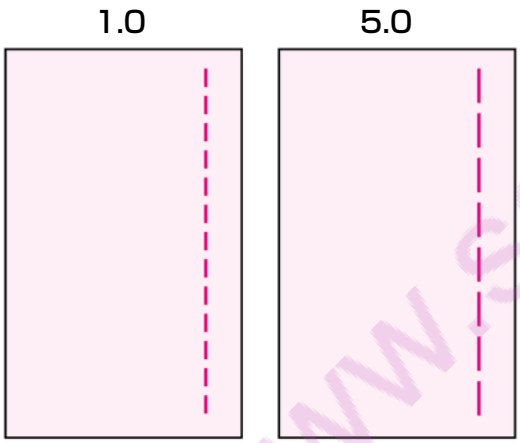

www.sewshop.eu

4.19. Setting the stop position of needle

It is possible to set the position of the needle (upper or lower position) at the time of stopping the sewing machine.

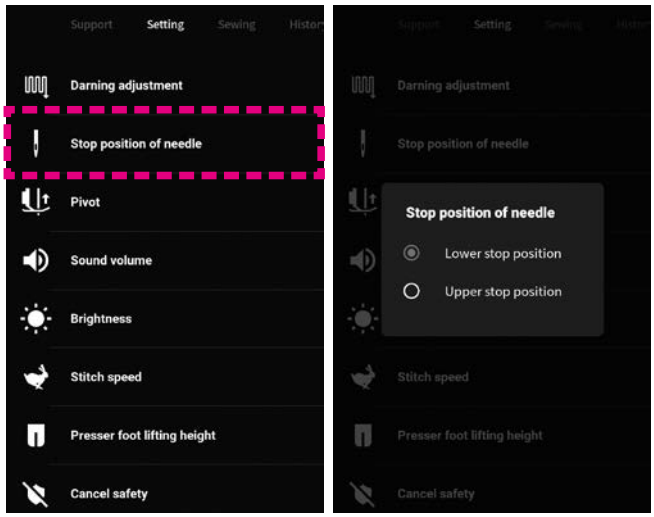

Select [Stop position of needle] from [Setting].
Select the “Lower stop position” or the “Upper stop position”.
When you tap the portion outside the setting screen, the screen returns to the common setting screen.

* In the case the “upper stop position” (the sewing machine stops with its needle up) is selected, the pivot function will be automatically turned OFF.

4.20. Pivot setting

It is possible to set so that the presser foot goes up while the needle is kept at the lower position at the time of stopping the sewing machine.

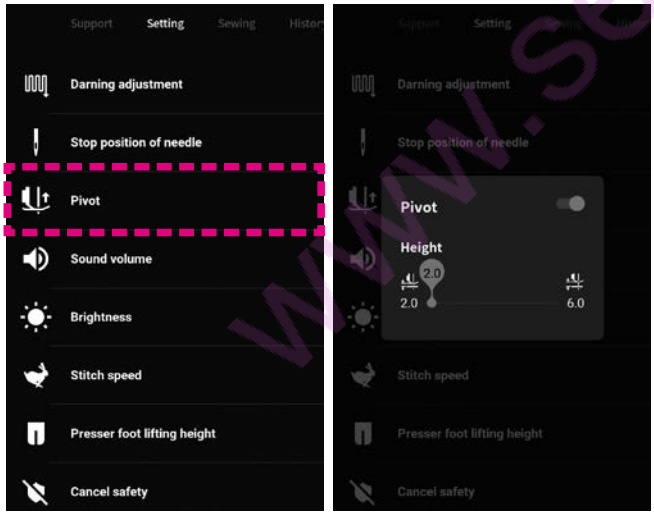

Select [Pivot] from [Setting].

- **Setting the ON / OFF of the pivot function**

  : ON

  : OFF

- **Setting the pivot height**

  Set the pivot height by sliding the slide bar with your finger to the right or left.

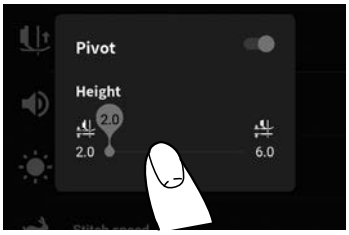

When you tap the portion outside the setting screen, the screen returns to the common setting screen.

www.sewshop.eu

5. Setting for the pattern sewing

5.1. Single mode / Combination mode

Some of the patterns cannot be sewn depending on the mode selected.
The list of patterns is shown on the inside of the top cover of the sewing machine.

5.1.1. Single mode

Under the single mode, the sewing machine directly sews the pattern you have selected.

■ Selecting the pattern

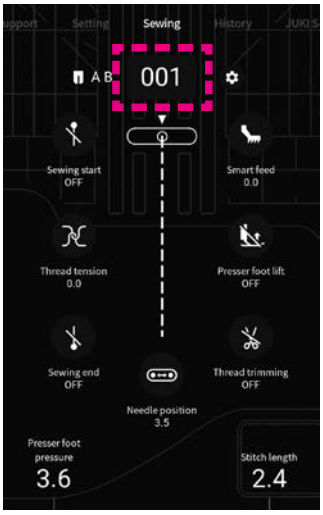

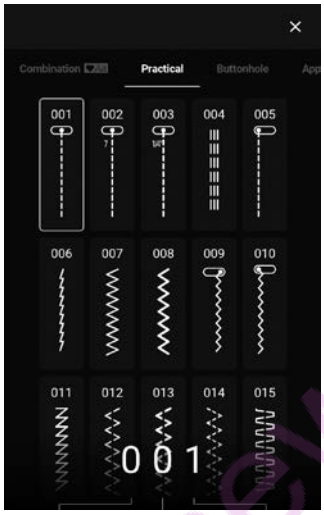

Press 001 (Pattern selection icon).

Select the pattern you want to sew from among [Practical], [Buttonhole], [Appliqué], [Tapering], [Quilt line], [Scallop], [One-point], [Decorative], [Vintage], and [Feather / Lace].

<How to select the pattern>
- Press the pattern icon.
- Enter the pattern number.

www.sewshop.eu

● Setting for the repetition stitching (single mode)

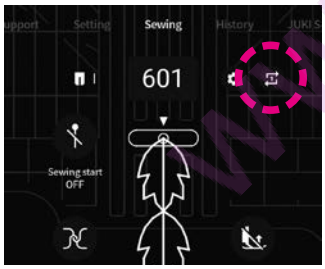

The setting can be changed by pressing the icon.

: The pattern is sewn in repetition (continuously) (Initial setting)

: One stitch is sewn
: One cycle is sewn

5.1.2. Combination mode

The combination stitching mode is used for sewing two or more patterns in combination.
As many as 70 petterns can be combined in one combined pattern.
As many as 10 combined in one combined pattern.

■ Selecting a pattern (letter)

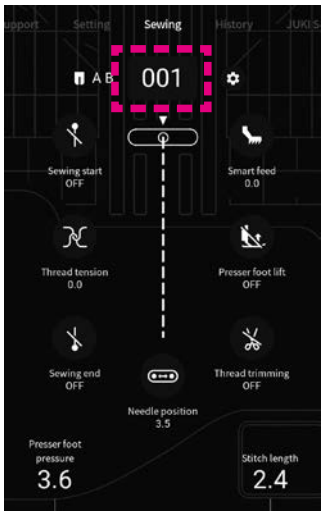

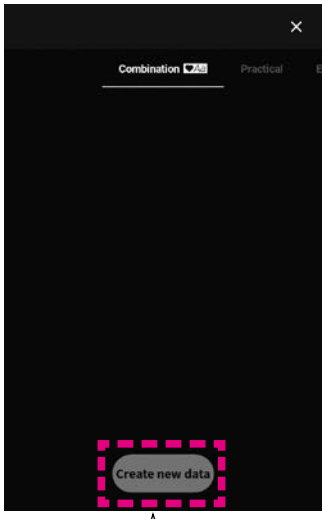

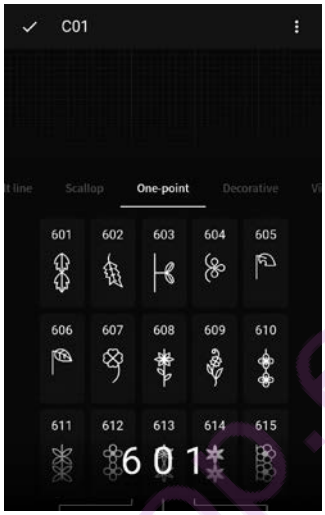

In the case 10 patterns have been saved, the message will be displayed when you press [Create new data].
Press ⋮ to delete the combined patterns.

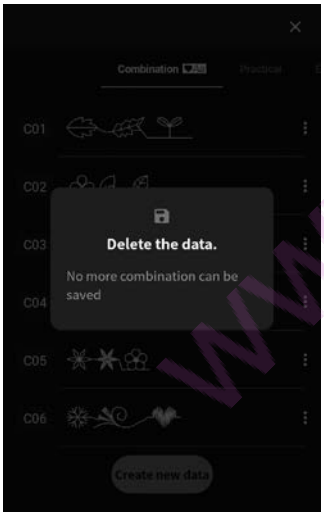

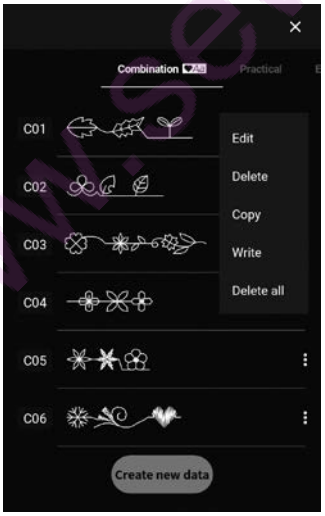

Press 001 (Pattern selection icon).

Select [Combination].

Press [Create new data].

Select the pattern you want to sew from among [Appliqué], [Quilt line], [Scallop], [One-point], [Decorative], [Vintage], [Feather / Lace] and [Characters].

<How to select the pattern>
- Press the pattern (letter) icon.
- Enter the pattern number.

● Setting for the repetition stitching (combination mode)

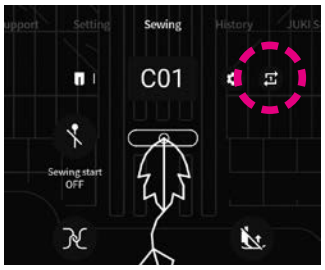

The setting can be changed by pressing the icon.

: Selected pattern or selected combination of patterns is sewn once. (Initial setting)

: Selected pattern or selected combination of patterns is sewn continuously.

www.sewshop.eu

5.2. Types of patterns under the single mode, and how to selected a pattern

☆ There are 368 types of stitch patterns.

☆ When turning on the machine, the straight stitch of the center needle position is chosen automatically.

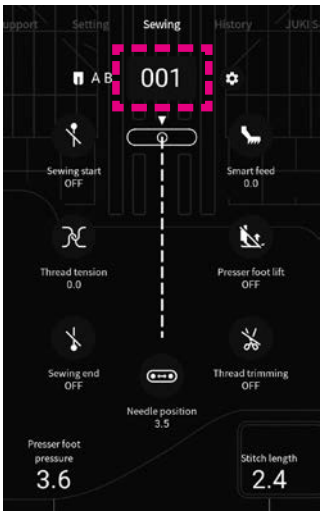

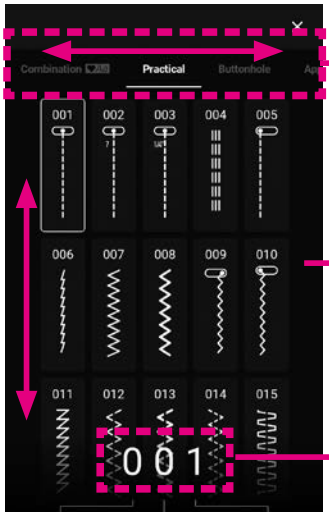

① Select the type of pattern.
[Practical] [Buttonhole] [Appliqué] [Tapering] [Quilt line] [Scallop] [One-point] [Decorative] [Vintage] [Feather / Lace] [Combination]

② Press the pattern icon.

Alternatively,

① Enter the pattern number.
- The number is increased one by one by tapping it.
- It is also possible to change the number by turning the adjusting dial.

② The screen which contains the pattern with the number you have input is displayed. Select the pattern icon you want to sew.

5.2.1. Practical

No.	Pattern	Application		Refer to page
001		Center needle position	Straight stitch	62
002	7	Piecing 7mm		68
003	1/4"	Piecing 1/4"		68
004		Straight reinforced stitch		-
005		Left needle position	Straight stitch	62
006		Center needle position	Straight stitch for elastic	-
007		Zigzag stitch		-
008		Triangular zigzag stitch		-

No.	Pattern	Application		Refer to page
009		Right needle position	Zigzag stitch	-
010		Left needle position		-
011		Ornamental pattern		-
012		Two point zig zag		-
013		Triple standard zigzag		-
014		Three point zig zag		-
015		Butting stitch		-
016		Overcasting stitch		69

www.sewshop.eu

No.	Pattern	Application	Refer to page
017		Overcasting stitch	69
018		Overcasting stitch Used for lightweight material	69
019		Overcasting stitch Used for flexible material	-
020			-
021			-
022		Ornamental pattern	-
023			-
024			-
025		Blind stitch	70
026		Blind stitch Used for lightweight material	70
027		Blind stitch Used for flexible material	70
028		Shell tuck	73
029			73
030		Back straightline stitch * Proceed with the reverse stitch button.	-
031		Back zigzag stitch * Proceed with the reverse stitch button.	-

No.	Pattern	Application	Refer to page
032		Bar tack	74
033	MEM	Bar tack (Memory) * Size of bartacking you have sewn once can be stored in memory.	74
034		Reinforced stitch	-
035			-
038		Eyelet	76
039			76
040			76
041			76
042			76
043		Darning stitch	-
044			-
045			-
044		Attaching a quilt sleeve	100

www.sewshop.eu

5.2.2. Buttonhole

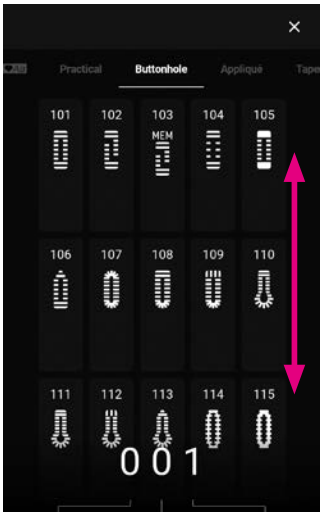

Select the pattern.

No.	Pattern	Application	Refer to page
101		Standard buttonholes	84
102		2-step buttonhole	91
103	MEM	2-step buttonhole (Memory) * It is possible to store the size of buttonhole you have sewn once in memory.	91
104		Standard buttonholes	84
105			84
106		Decorative	84
107		Rounded end	84
108			84
109			84

No.	Pattern	Application	Refer to page
110		Keyhole buttonholes	84
111			84
112			84
113			84
114		For knit	84
115			84
116			84
117			84
118		Decorative	84
119			84
120			84
121		Basting stitch for buttonholing	90
122		Button sewing	93

www.sewshop.eu

5.2.3. Appliqué

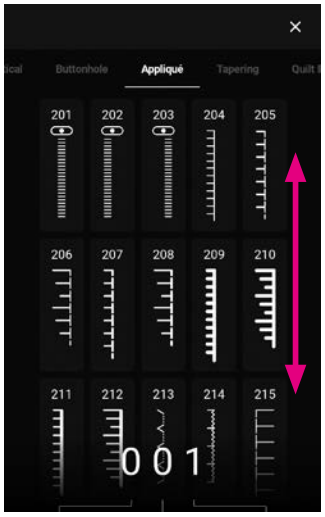

Select the pattern.

No.	Pattern	No.	Pattern	No.	Pattern	No.	Pattern	No.	Pattern
201		209		217		225		233	
202		210		218		226		234	
203		211		219		227		235	
204		212		220		228		236	
205		213		221		229		237	
206		214		222		230		238	
207		215		223		231		239	
208		216		224		232		240	

5.2.4. Tapering

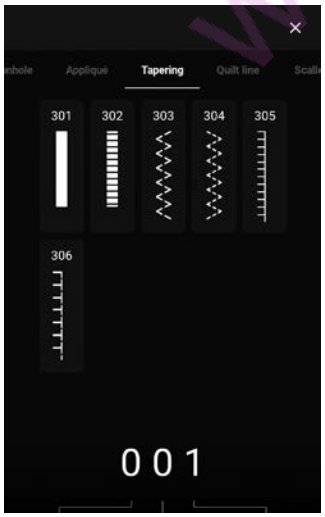

Select the pattern.

No.	Pattern	No.	Pattern	No.	Pattern
301		303		305	
302		304		306	

www.sewshop.eu

5.2.5. Quilt line

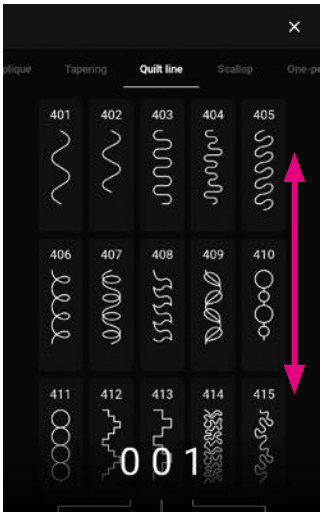

Select the pattern.

No.	Pattern	No.	Pattern	No.	Pattern	No.	Pattern	No.	Pattern
401		406		411		416		421	
402		407		412		417		422	
403		408		413		418			
404		409		414		419			
405		410		415		420			

6.2.6. Scallop

Select the pattern.

No.	Pattern	No.	Pattern	No.	Pattern	No.	Pattern
501		504		507		510	
502		505		508		511	
503		506		509		512	

www.sewshop.eu

5.2.7. One-point

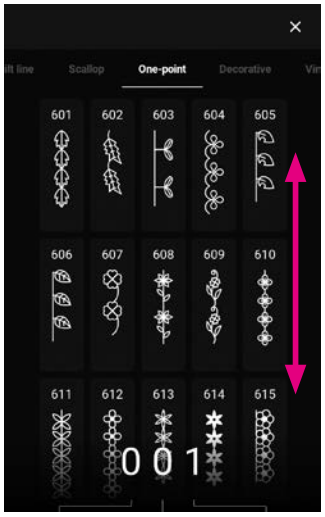

Select the pattern.

No.	Pattern	No.	Pattern	No.	Pattern	No.	Pattern	No.	Pattern
601		618		635		652		669	
602		619		636		653		670	
603		620		637		654		671	
604		621		638		655		672	
605		622		639		656		673	
606		623		640		657		674	
607		624		641		658		675	
608		625		642		659		676	
609		626		643		660		677	
610		627		644		661	Sewing	678	
611		628		645		662	Handmade	679	
612		629		646		663	made by	680	
613		630		647		664	Happy	681	
614		631		648		665	collection	682	
615		632		649		666	Cuddly	683	2.5
616		633		650		667		684	2.5
617		634		651		668			

www.sewshop.eu

5.2.8. Decorative

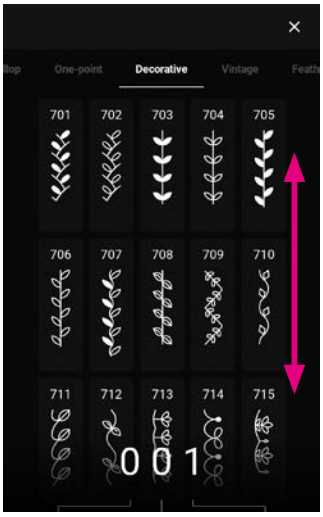

Select the pattern.

No.	Pattern	No.	Pattern
701		710	
702		711	
703		712	
704		713	
705		714	
706		715	
707		716	
708		717	
709		718	

No.	Pattern	No.	Pattern	No.	Pattern	No.	Pattern	No.	Pattern
719		734		749		764		779	
720		735		750		765		780	
721		736		751		766		781	
722		737		752		767		782	
723		738		753		768		783	
724		739		754		769		784	
725		740		755		770		785	
726		741		756		771		786	
727		742		757		772			
728		743		758		773			
729		744		759		774			
730		745		760		775			
731		746		761		776			
732		747		762		777			
733		748		763		778			

www.sewshop.eu

5.2.9. Vintage

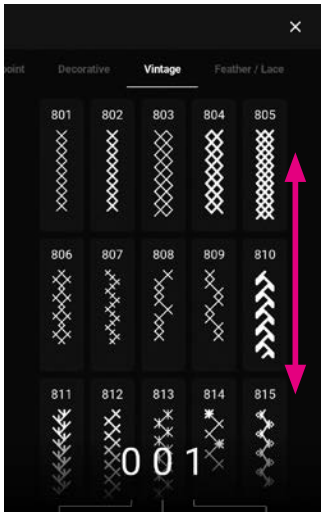

Select the pattern.

No.	Pattern	No.	Pattern	No.	Pattern	No.	Pattern	No.	Pattern
801		809		817		825		833	
802		810		818		826		834	
803		811		819		827		835	
804		812		820		828		836	
805		813		821		829		837	
806		814		822		830			
807		815		823		831			
808		816		824		832			

5.2.10. Feather / Lace

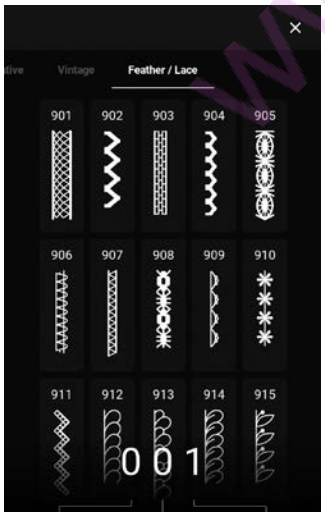

Select the pattern.

No.	Pattern	No.	Pattern	No.	Pattern	No.	Pattern	No.	Pattern
901		904		907		910		913	
902		905		908		911		914	
903		906		909		912		915	

www.sewshop.eu

5.2.11. Letters

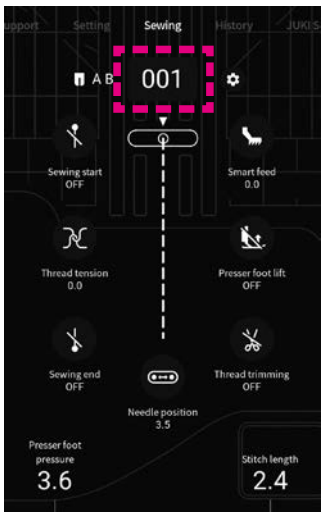

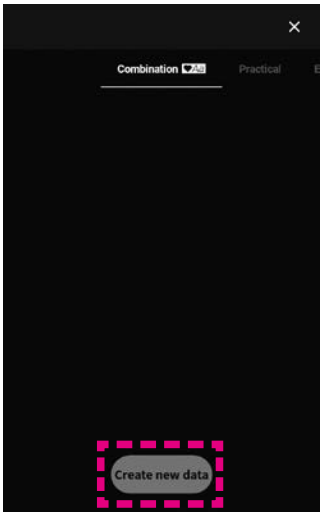

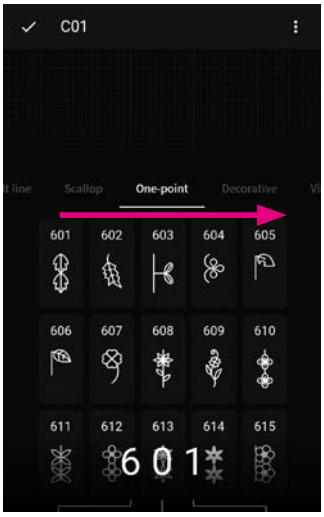

Press 001 (Pattern selection icon).

Select [Combination].

Press [Create new data].

Select the type of letter (font).

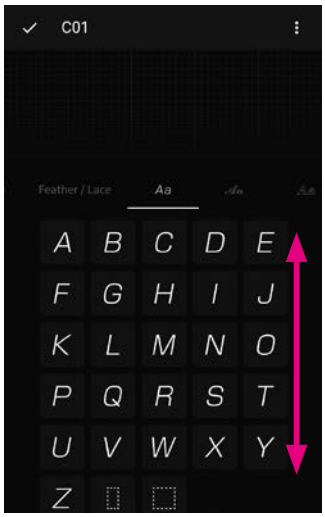

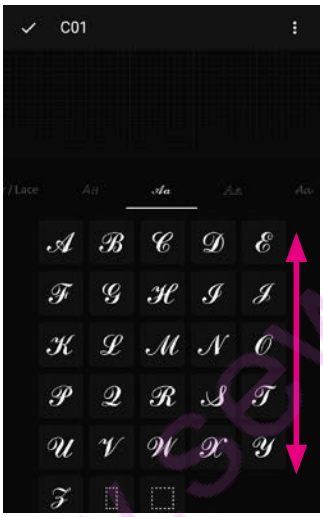

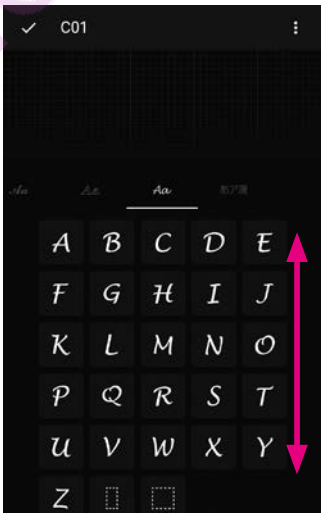

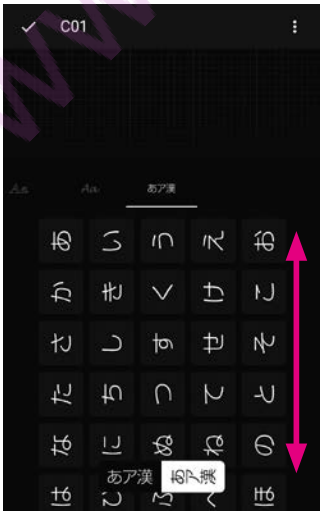

Select the letter.
Select the direction of letters between horizontal/vertical using あア漢 .

www.sewshop.eu

5.3. Combination of patterns under the combination mode

(1) Selecting and combining the patterns (letters)

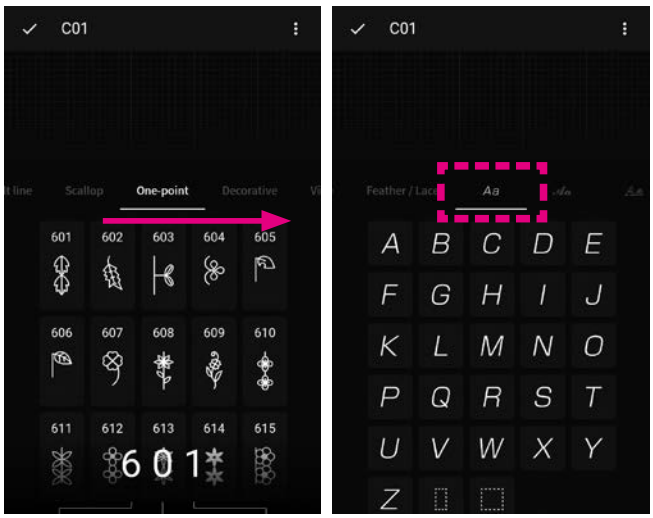

(Example: JUKI♥)

Select the type of letter (font).

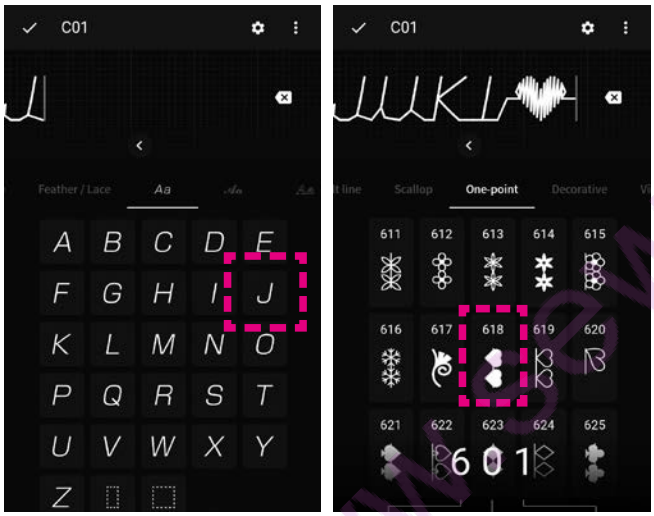

Press the icon and enter “JUKI”.

Select [One-point].

Press the pattern (No. 618).

When you press ✓, the combination of the patterns is saved and the swing screen is displayed.

www.sewshop.eu

(2) Selecting a space

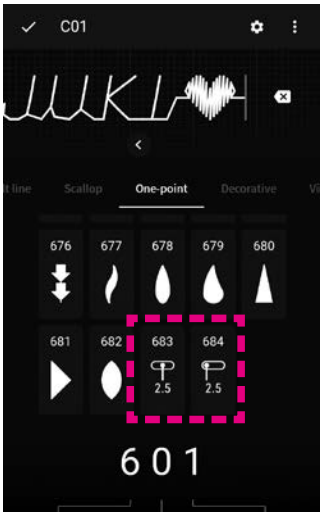

Combine a pattern (letter) with another pattern (letter) while inserting one of the following patterns between them.

- Pattern No.683 (2.5)
- Pattern No.684 (2.5)
- (Small space)
- (Large space)

(3) Adding a pattern (letter)

A pattern (letter) can be added to the colored vertical line portion.

● In the case of adding a pattern (letter) between the patterns

(Example: J♥UKI)

Move the colored vertical line between “J” and “U” with .

Press the pattern (No. 618).

● In the case of prepending a pattern (letter) at the beginning of the patterns

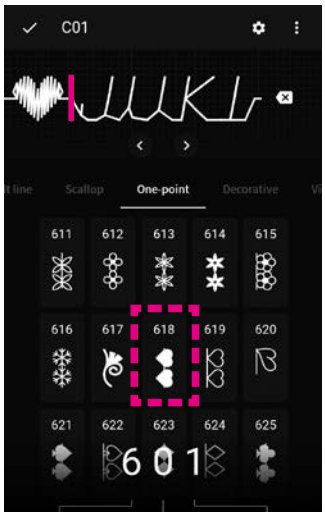

(Example: ♥JUKI♥)

Move the colored vertical line before “J” with .

Press the pattern (No. 618).

www.sewshop.eu

(4) Deleting a pattern (letter)

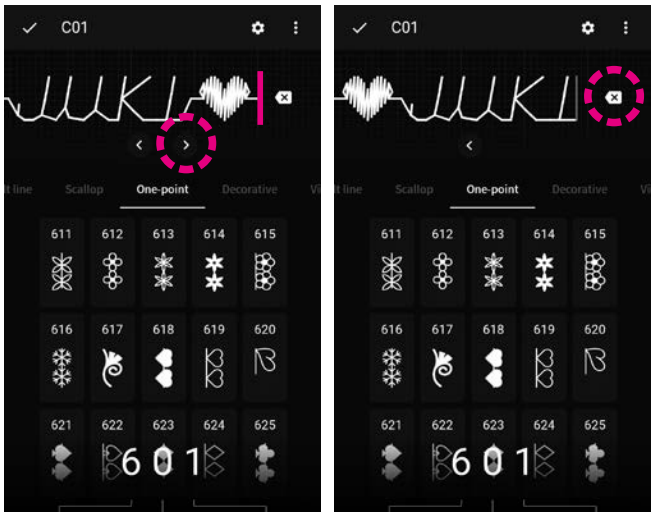

(Example: ♥JUKI♥ ⇒ ♥JUKI)

Move the colored vertical line with ❯ to the right side of the pattern you want to delete.

Press ⌫ .

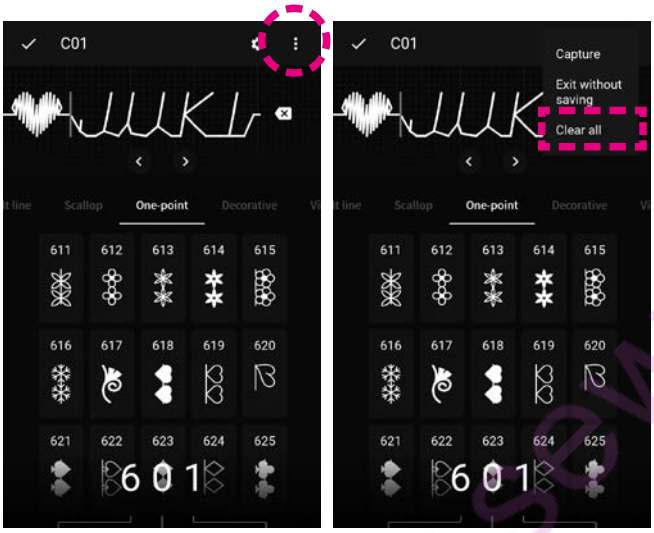

<In the case of deleting the patterns collectively>
When you select [Clear all] by pressing ⋮ , all of the combined patterns can be deleted.

(5) Deleting/copying the combined patterns

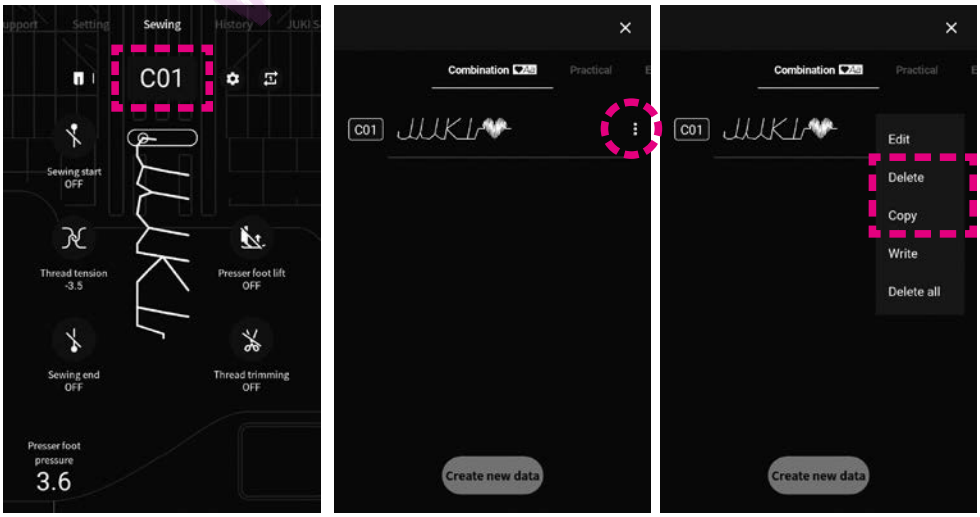

Press C01 .

Press ⋮ of the combination display you want to delete (copy).

Select [Delete] or [Copy].

www.sewshop.eu

5.4. Types of edit functions and how to use them

Types of editing functions that can be used differ with the pattern you have selected.

	Function	Refer to page
	Thread tension	36
	Needle position	40
	Horizontal inversion : OFF : ON	59
	Vertical inversion : OFF : ON	59
Elongation ×1	Change in the elongation size	98

	Function	Refer to page
	Change in the angle and size of tapering	82
	Change of seam width of buttonhole	89
	Setting the interval between patterns	60
Reset settings	Reset settings	60
	Writing / capturing the pattern data	61

● How to display the edit screen

Single mode

Sewing screen

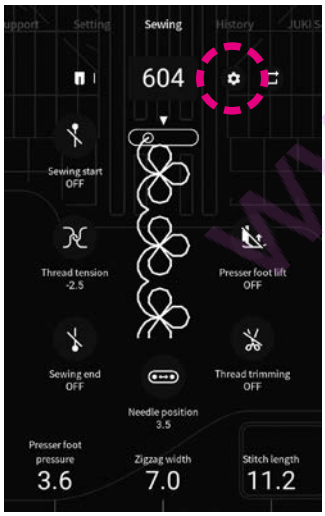

Press .

Combination mode

Combination selection screen

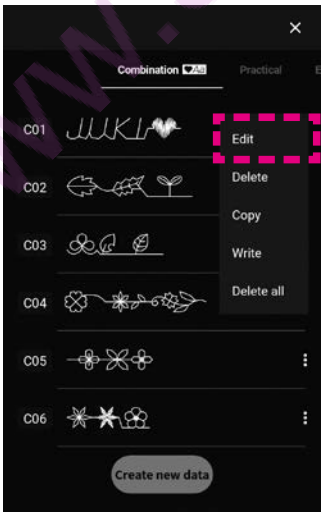

Select [Edit] by pressing .

Sewing screen

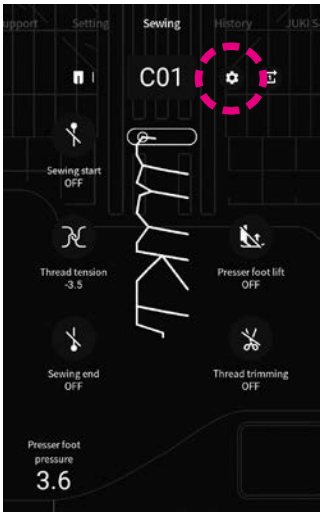

Press .

Pattern selection screen

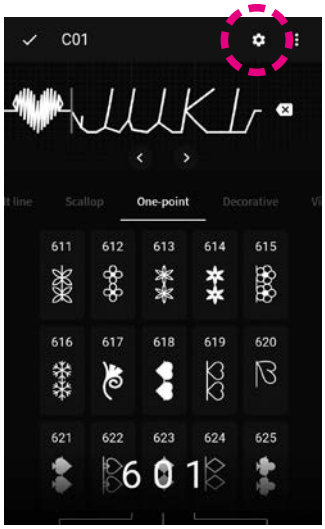

Press .

www.sewshop.eu

5.4.1. Pattern inversion

● Horizontal inversion

Press when you want to sew a horizontally-inverted pattern. The horizontally inverted pattern is displayed.

● Vertical inversion

Press when you want to sew a vertically-inverted pattern. The vertically inverted pattern is displayed.

* Horizontal inversion and vertical inversion are not applicable to some patterns.
* It is also possible to “vertically invert the horizontally-inverted pattern” or “horizontally invert the vertically-inverted pattern”.

Single mode	Combination mode
From the sewing screen	**From the sewing screen**
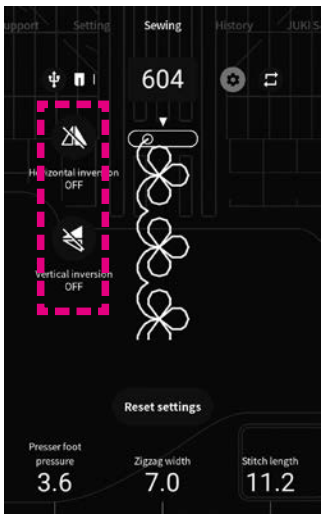	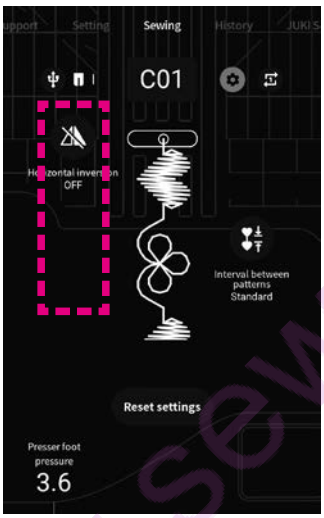

Single mode: Pattern is inverted.
Combination mode: Combined patterns are inverted collectively.

Combination mode	Combination mode
From the combination selection screen	**From the pattern selection screen**
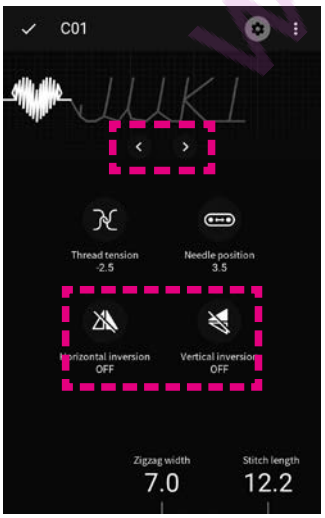	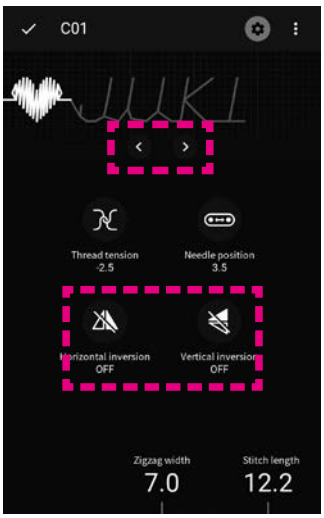

Combined patterns can be inverted on a pattern-by-pattern basis.

Select the pattern you want to edit with .

www.sewshop.eu

5.4.2. Setting the interval between patterns

Combination mode

From the sewing screen

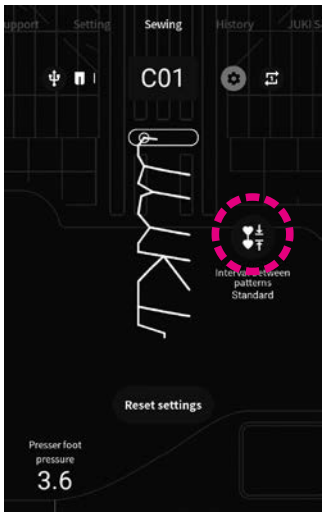

When you press , the interval between the patterns is decreased.

When you press again, the pattern interval is restored to the standard setting.

For the standard setting, the lock stitch is set at the end of each patterns.
So when some patterns are combined, a lock stitch is done at the between each patterns.
If the stitch interval is decreased, the lock stitch between patterns will be omitted.

5.4.3. Reset settings

Single mode

From the sewing screen

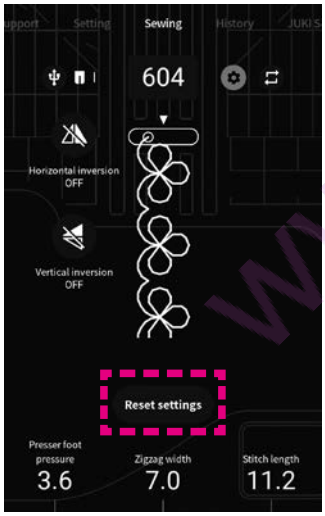

Combination mode

From the sewing screen

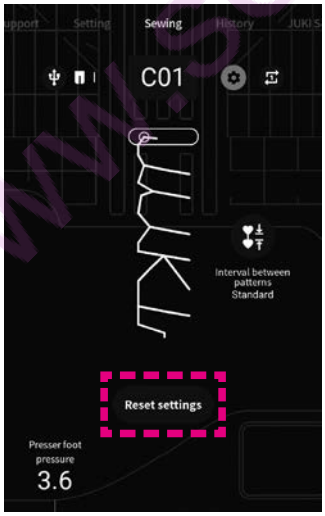

When you press [Reset settings], all of the settings you have done on the edit screen are reset.

www.sewshop.eu

5.4.4. Writing / capturing the pattern data

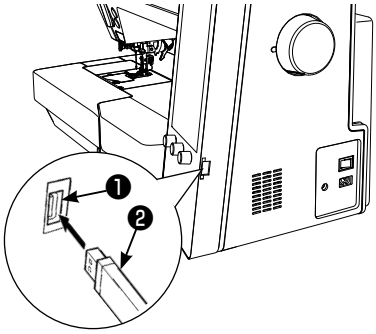

It is possible to capture or write the pattern information by means of a USB thumb drive.

Insert USB thumb drive ❷ into USB slot ❶ .

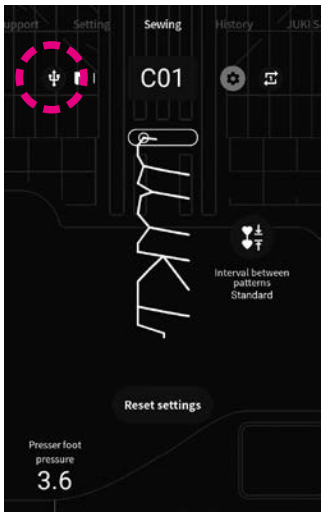

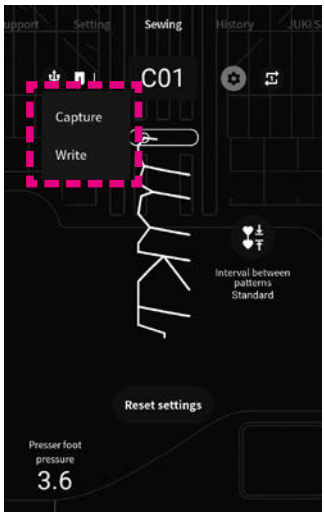

Press .

Select [Capture] or [Write].

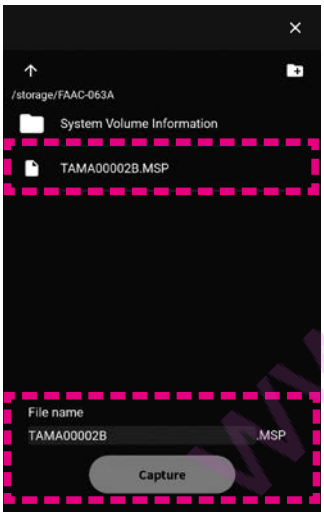

● In the case of [Capture]

Select the file you want to capture. Press [Capture].

Do not turn the power OFF while capturing (saving) is in progress .

When the backup data has been normally captured, the message “Turn OFF the power switch” is displayed.

Turn OFF the power to the sewing machine. Then, re-turn it ON.

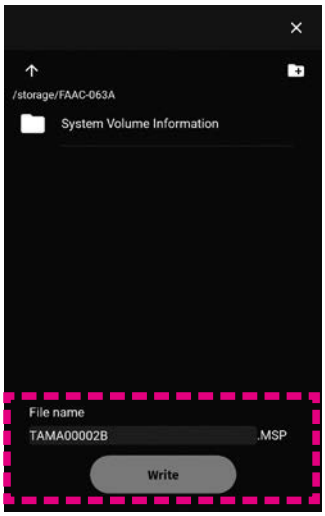

● In the case of [Write]

Enter an arbitrary file name and press [Write].

www.sewshop.eu

6. Sewing

6.1. Straight stitch

No.	Pattern	Presser foot
001		Standard presser foot (A)

⚠ Leave the machine in Lock mode

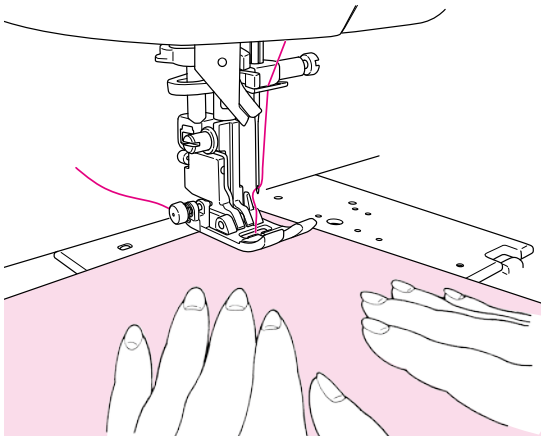

■ Sewing start

Pull the needle and bobbin threads under the presser foot to the rear of the machine and lower the presser foot to start sewing.

Setting > Cancel safety
Screen to set the functions while presser foot is up

It is possible to start sewing even if the presser foot is lifted. (Refer to page 108)

Setting > Stitch speed
Adjustable starting stitch speed

Sewing speed at the start of sewing can be changed. (Refer to page 107)

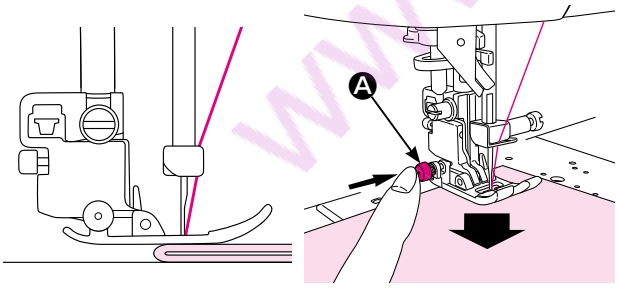

★ When sewing the edge of thick fabrics

Turn the hand wheel and let the needle enter at the position of sewing start. Push the black button Ⓐ by finger and lower the presser foot. Release the finger from the black button and start sewing. When the presser foot will be on the fabric completely, the black button will be disengaged automatically.

www.sewshop.eu

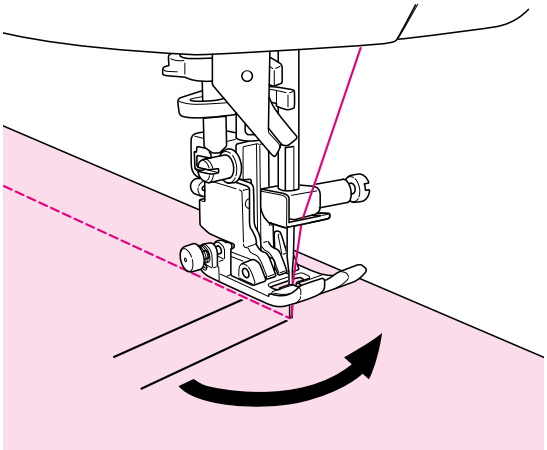

■ When changing the sewing direction

① Stop the sewing machine when the position for changing the direction of sewing is reached.

② If the needle is not penetrated into the material at that position, press the needle up/down button to allow the needle to penetrate into the material. Then, lift the presser foot.

* The sewing machine has been factory-set at the time of shipment, so that the needle penetrates into the material when the sewing machine is stopped.

③ Change the direction of sewing with the needle penetrated into the material. Then, lower the presser foot and start sewing.

Setting > Stop position of needle

Changing over the needle stop position

It is possible to change the stop position to which is the needle is brought when the sewing machine is stopped.
(Refer to page 105)

Setting > Pivot

Presser foot pivot function

You can select the setting where the presser foot goes up with the needle held in the needle-down stop position when you stop the sewing machine.
(Refer to page 105)

www.sewshop.eu

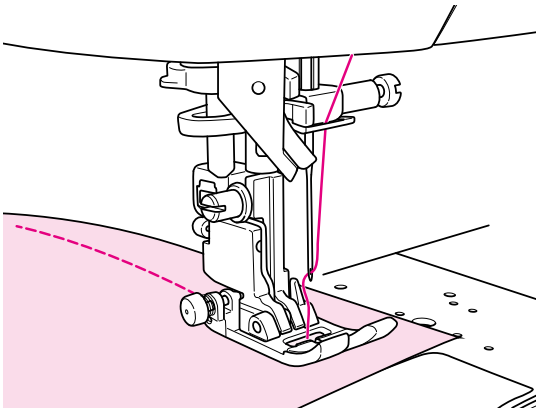

■ Sewing end

Stop the sewing machine.

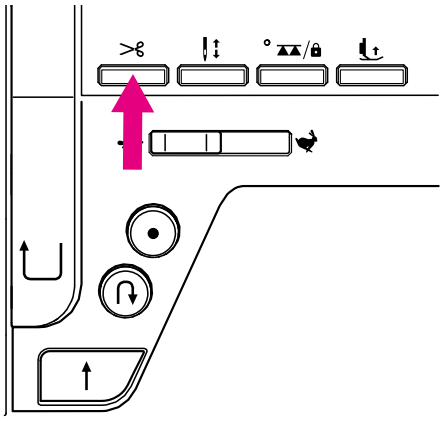

★ Thread trimming

<Using the thread trimming button>

Press the thread trimming button to trim the thread.
Lift the presser foot and remove the material from the sewing machine.

Notes for thread trimming:

1. Do not use thread thicker than No.30.
2. After trimming, the stitch can be done without pulling up bobbin thread.
3. When sewing again after thread trimming, if you pull up the bobbin thread again and place it underneath the presser foot together with needle thread, you can avoid birds nest on the wrong side of the fabric.
4. Regularly clean the machine (refer to page 123), as dust in the area of the thread trimming unit may cause malfunction.

<Using the foot switch>

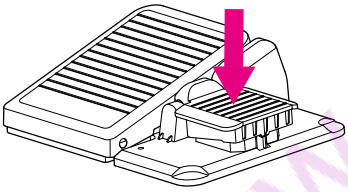

Setting > Foot switch functions
Foot switch functions

It is possible to set so as to trim the thread by pressing the foot switch. (Refer to page 108)

Press the foot switch to trim the thread.

<Using the thread cutter>

Lift the needle and lift the presser foot. In this state, it is possible to trim the thread with thread trimmer that is mounted on the face plate cover.

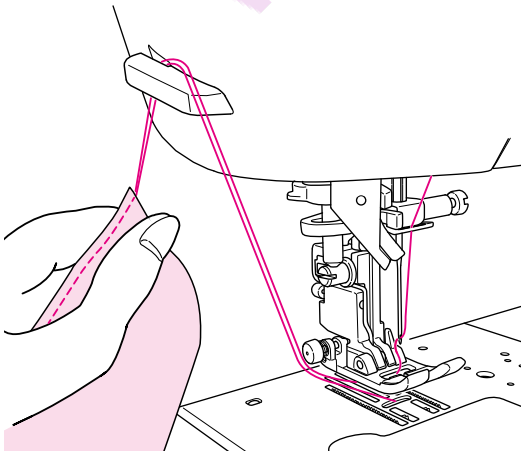

Sewing > ⊥↑
Presser foot lift after trimming setting

It is possible to set so that the presser foot goes up automatically after thread trimming.
(Refer to page 39)

www.sewshop.eu

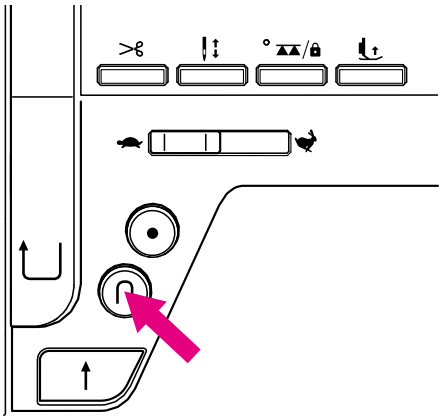

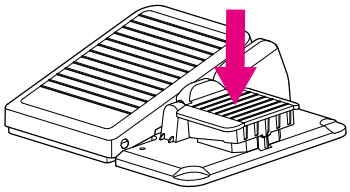

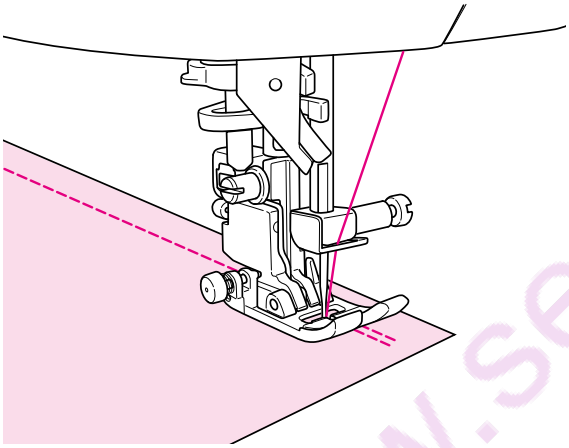

■ Reverse stitch

Use the reverse stitch button when you want carry out back tacking (reverse stitching) at the beginning and end of sewing.

Setting > Foot switch functions
Foot switch functions
It is possible to set so as to carry out reverse stitching as long as the reverse stitch button is held pressed. (Refer to page 108)

<When start/stop button is used>
The sewing machine carries out reverse stitching as long as the reverse stitch button is held pressed, and stops the sewing when the reverse stitch button is released.

<When foot controller is used>
The sewing machine carries out reverse stitching as long as the reverse stitch button is held pressed, and sews the material in the forward direction when the reverse stitch button is released.
In the case of sewing one-point stitches or letters, the sewing machine stops after the completion of lock stitches.

Setting > Stitch speed
Adjustable reverse stitch speed
Sewing speed of the reverse stitching can be changed. (Refer to page 107)

Sewing > Icons
Setting the automatic back tacking, thread trimming and presser foot lifting
The back tacking at the beginning and end of sewing and the back tacking and thread trimming / presser foot lift after thread trimming at the end of sewing can be set. (Refer to page 39)

www.sewshop.eu

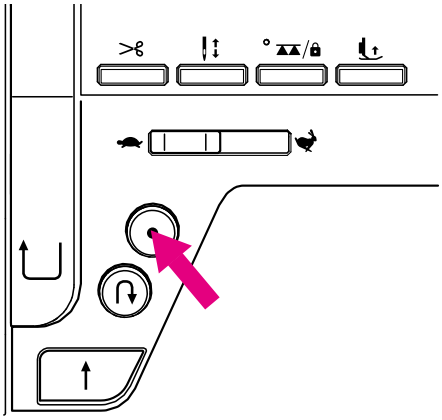

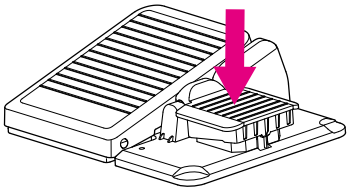

■ Lock stitch

Use the lock stitch button when you want to carry out discreet back tacking (lock stitching) at the beginning and end of sewing.

★ Sewing start

Press the lock stitch button at the position you want to carry out lock stitching.
The sewing machine carries out lock stitching and stops.

Setting > Foot switch functions
Foot switch functions
It is possible to set so as to carry out lock stitching by pressing the foot switch. (Refer to page 108)

★ Sewing end

<When start/stop button is used>
Push the lock stitch button at the end of sewing.
The sewing machine sews lock stitches and stops.

<When foot controller is used>
Press the foot switch when the end of sewing is reached.
The sewing machine sews lock stitches and stops.

* When you push the button while sewing one-point stitches or letters, the sewing machine sews until one cycle of the selected pattern is completed, sews lock stitches and stops. The start/stop button lights up in orange during the one cycle.

* Example)

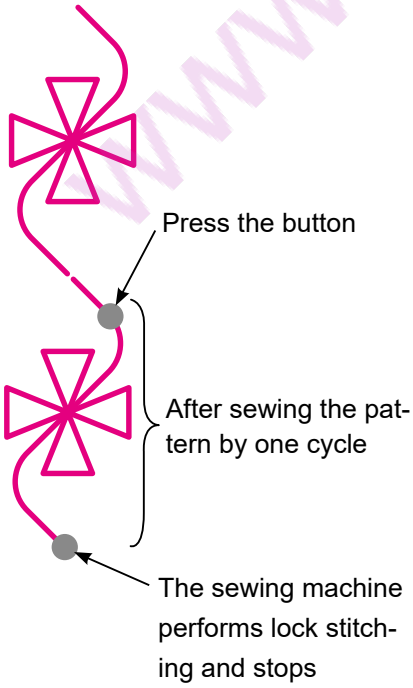

Setting > Stitch speed
Adjustable reverse stitch speed
Sewing speed of the reverse stitching and lock stitching can be set. (Refer to page 107)

Sewing > Icons
Setting the automatic back tacking, thread trimming and presser foot lifting
The back tacking at the beginning and end of sewing and the back tacking and thread trimming / presser foot lift after thread trimming at the end of sewing can be set. (Refer to page 39)

www.sewshop.eu

6.2. Inserting zippers

No.	Pattern	Presser foot
001		Zipper presser foot (B)

⚠ Leave the machine in Lock mode

*** Make sure to use center needle position (Stitch pattern No. 001).**

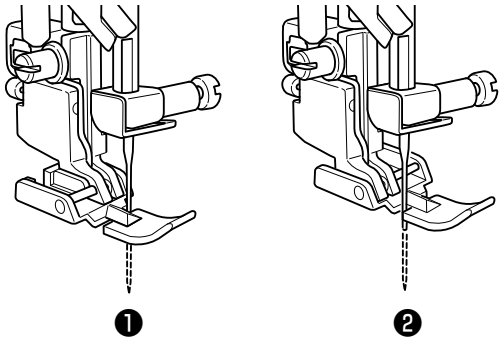

1 **Attach the zipper presser foot (B) to the machine.**

When sewing the left side of the zipper, place the zipper under the right portion ❶ of the zipper presser foot.
When sewing the right side of the zipper, place the zipper under the left portion ❷ of the foot.

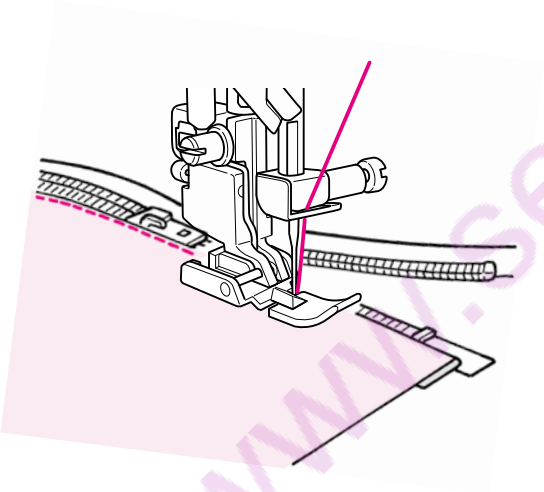

2 **Continue sewing until the top end of the slider is reached. Then, move the slider away from you, and continue sewing until the end of zippers is reached.**

www.sewshop.eu

6.3. Patchwork piecing

No.	Pattern
002	7
003	1/4"

Presser foot
Standard presser foot (A)

⚠ Leave the machine in Lock mode

To sew pieces of cloth together is called piecing in patchwork.
In the case of piecing, set the seam allowance generally to 7 mm or 1.4 inches for sewing.

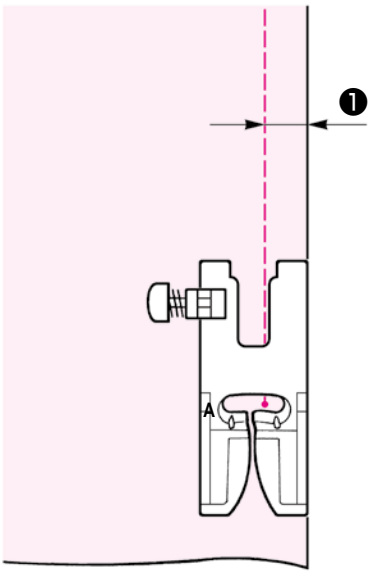

1 **Cut the fabric with seam allowance.**

2 **Align the right end of the presser foot and the edge of the fabric and sew.**

The needle will enter 7 mm (1/4") ❶ from the edge of the fabric, so the seam allowance of 7 mm (1/4") can be sewn.

www.sewshop.eu

6.4. Overcasting stitch

No.	Pattern
016	
017	
018	Lightweight material

Presser foot
Overcasting presser foot (C)

⚠ Leave the machine in Lock mode

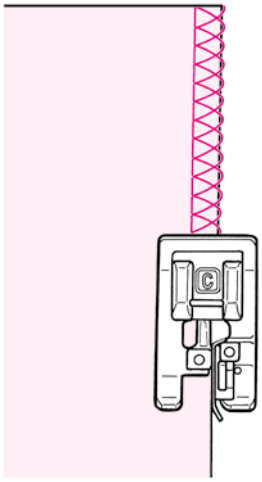

This stitch is used to prevent the edge of fabric from fraying.

Push the fabric towards the guide and sew.
If the fabric and guide are apart, it will not make a nice stitch formation. Make sure to guide the fabric along the guide and sew slowly.

* Before sewing, make sure to check that the needle will not hit the presser foot.

www.sewshop.eu

6.5. Blind stitch

No.	Pattern
025	
026	Lightweight material
027	Stretchy fabrics

Presser foot
Blind stitch presser foot (D)

⚠ Leave the machine in Lock mode

■ Folding fabrics

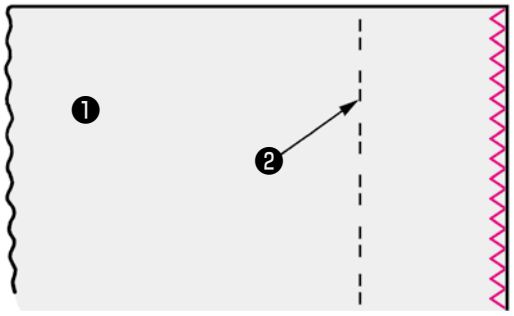

1 **Sewing overcasting stitches on the edge of fabric.**

(Refer to page 69 for overcasting stitches)

❶ Fabric (wrong side)
❷ Finish line

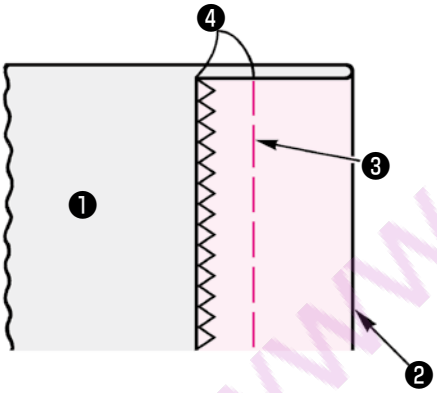

2 **Carry out basting ❸ by hand.**

❹ 0.5 - 0.6 cm

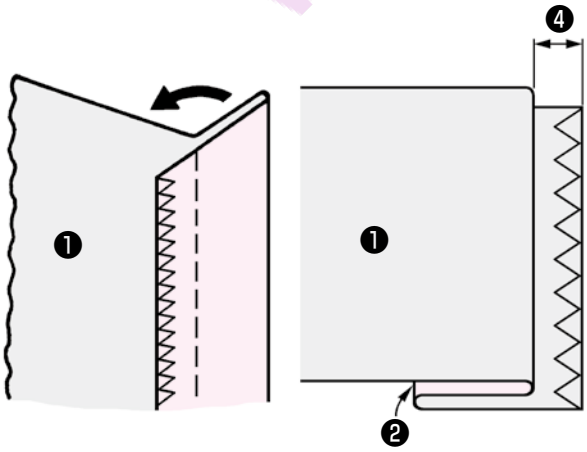

3 **Fold from basting line.**

Leave 0.5 to 0.6 cm.

www.sewshop.eu

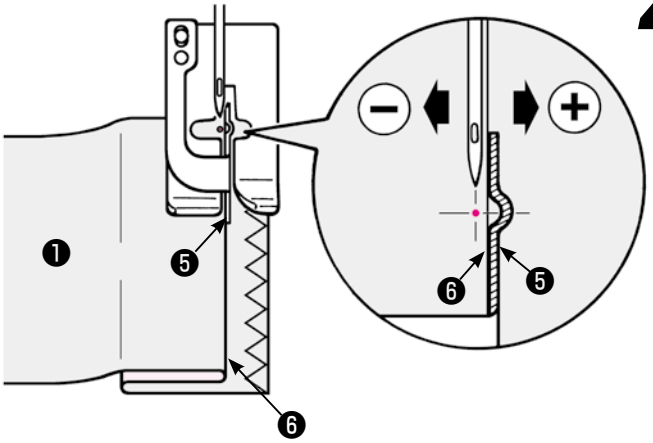

4 **Align guide ❺ of the presser foot with folded edge ❻ . Turn the handwheel and adjust the zigzag width with the zigzag width adjusting dial so that zigzag stitches reach the folded edge.**

*** Pay attention so that needle will not hit the presser foot.**

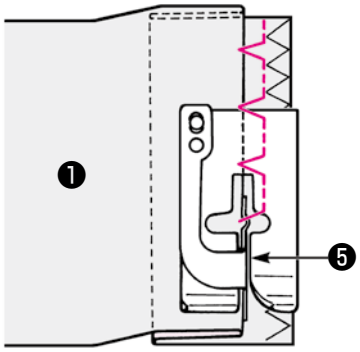

5 **Position the folded edge against the guide ❺ and sew.**

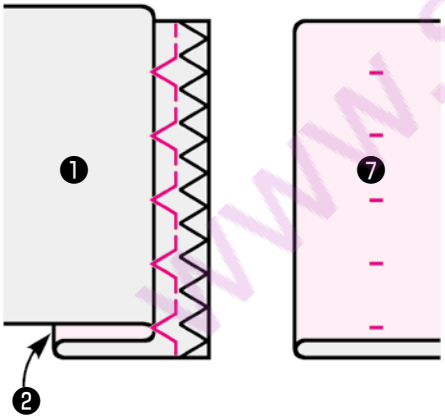

6 **Turn over the fabric after sewing.**

❼ Fabric (right side)

www.sewshop.eu

■ When changing the needle entry point

1. If the stitches reach too far beyond the folded edge

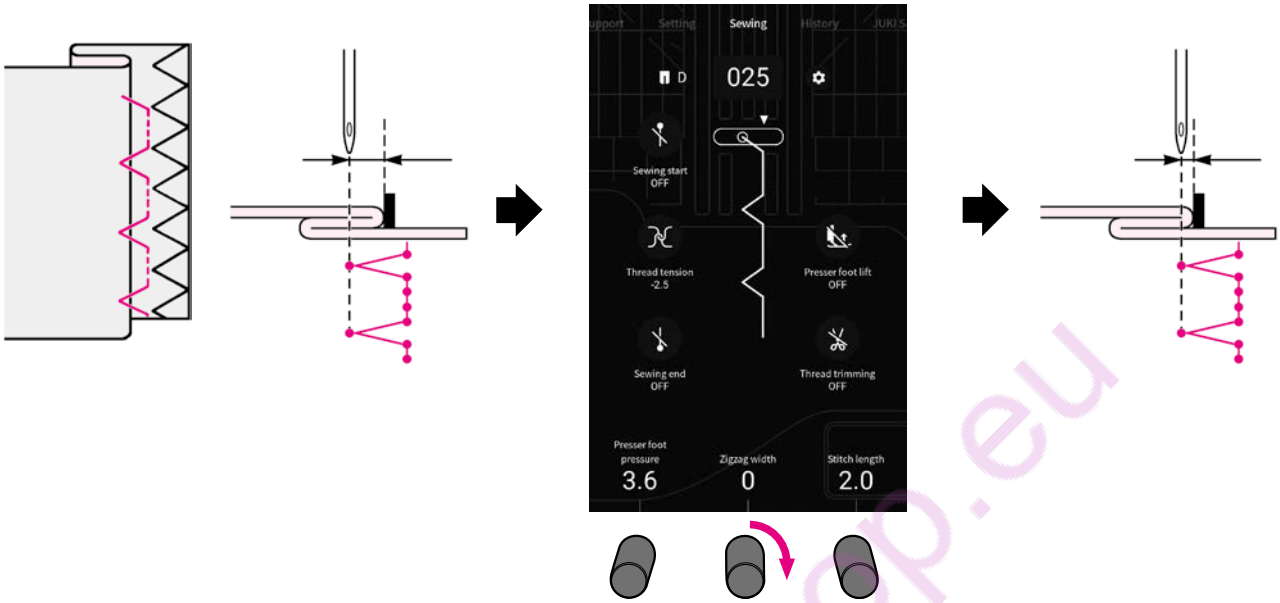

Turn the zigzag width adjusting dial clockwise (to the right).

(Turn the handwheel to check the needle entry point. When adjusting, make sure the needle is in the up position.)

2. If the stitches fail to reach the folded edge

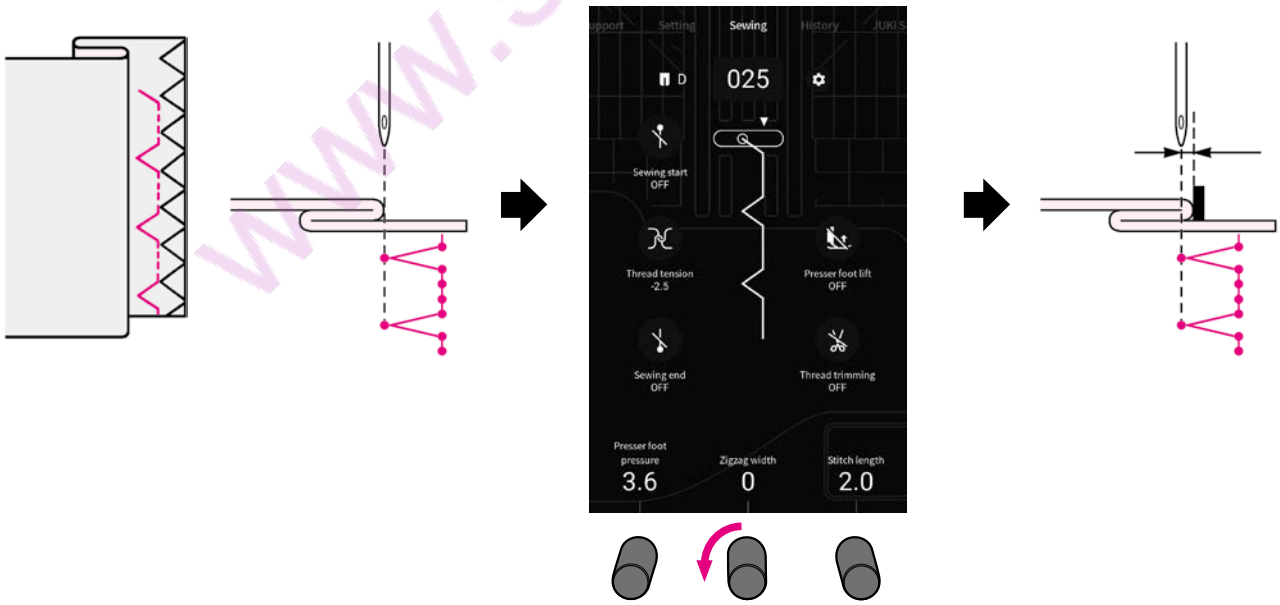

Turn the zigzag width adjusting dial counterclockwise (to the left).

(Turn the handwheel to check the needle entry point. When adjusting, make sure the needle is in the up position.)

www.sewshop.eu

6.6. Shell tuck

No.	Pattern
028	
029	

Presser foot
Manual buttonhole presser foot (I)

⚠ Leave the machine in Lock mode

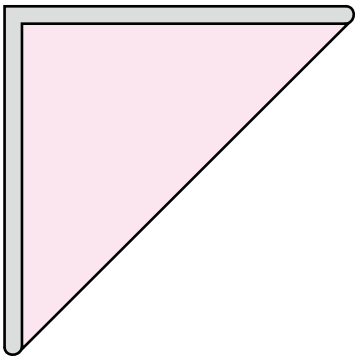

1 **Fold the material in the bias direction.**

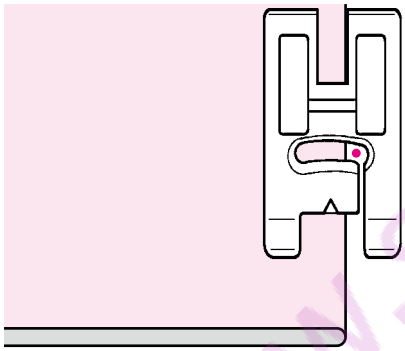

2 **Sew the material so that the needle enters the portion that is located on the right side of the top of the folds.**

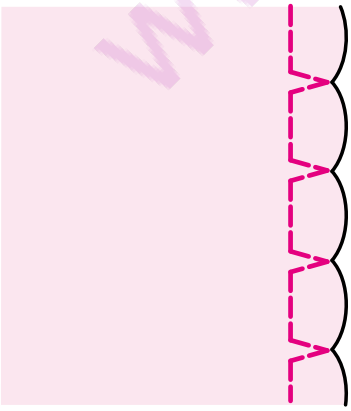

3 **The seashell-shaped tucking is produced.**

www.sewshop.eu

6.7. Bartacking

No.	Pattern
032	
033	MEM

Presser foot
Manual buttonhole presser foot (I)

⚠ Leave the machine in Lock mode

Bartacking is used to reinforce the part of the seam that is likely to ravel.

* The length of the bartack is determined by pushing the reverse stitch button, but it will automatically make a u-turn when it reaches the maximum of 20 stitches.
* If the presser foot cannot be parallel to throat plate, use filler fabric or cardboard.

Example of use)

www.sewshop.eu

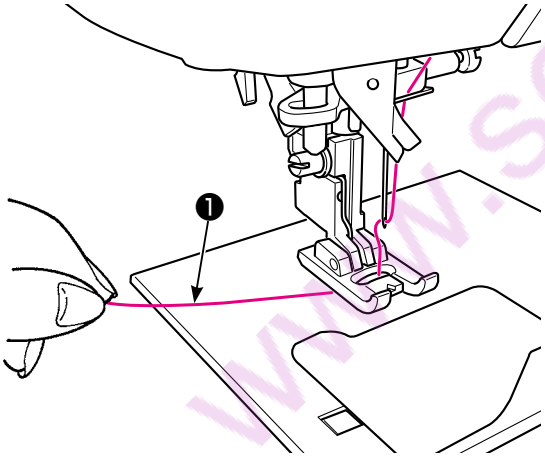

1 **Pass the needle thread through the presser foot.**

❶ 10 cm

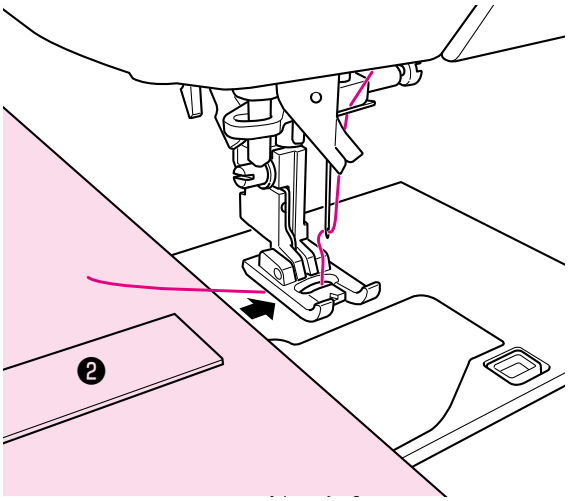

2 **Place the fabric ❷ under the presser foot.**

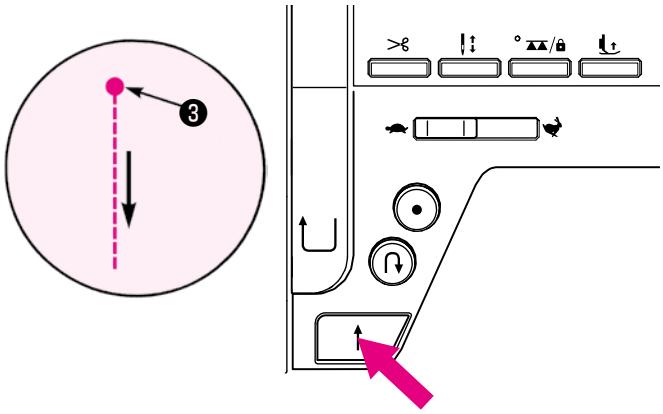

3 Start sewing.

Push the start/stop button and the machine starts to sew straight stitches.

❸ Starting point

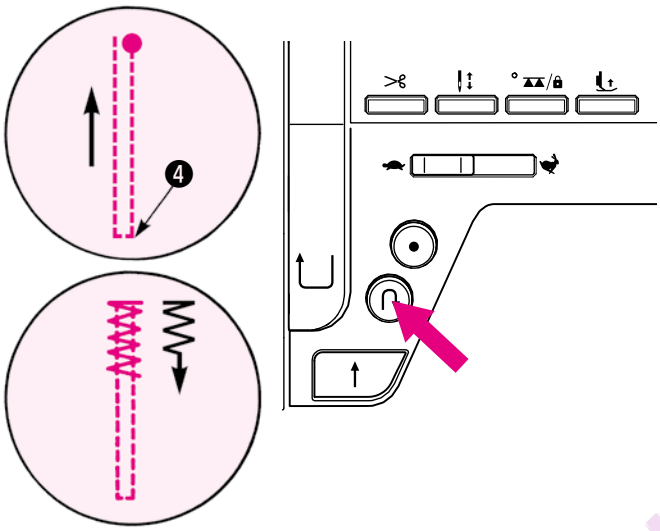

4 When it comes to the turning point ❹ push the reverse stitch button.

The machine goes back to the starting point by sewing straight stitches and then it sews zigzag stitches to the point where the reverse stitch button is pushed.

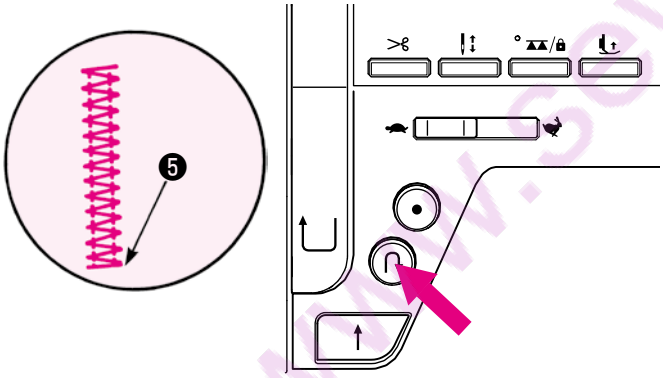

5 When the machine comes to the sewing end point, push the reverse stitch button.

The machine sews lock stitches ❺ and stops.

www.sewshop.eu

MEM

* **No. 033 In the case of bartacking (memory)**

Since the length of a bartack that is sewn for the first time is stored in memory, step of procedure *4* is not required for bartacking for the 2nd time and beyond.

If you want to change the bartack length stored in memory, any other pattern should be selected.

6.8. Eyelet

No.	Pattern
036	
037	
038	

No.	Pattern
039	
040	

Presser foot
Manual buttonhole presser foot (I)

⚠ Leave the machine in Lock mode

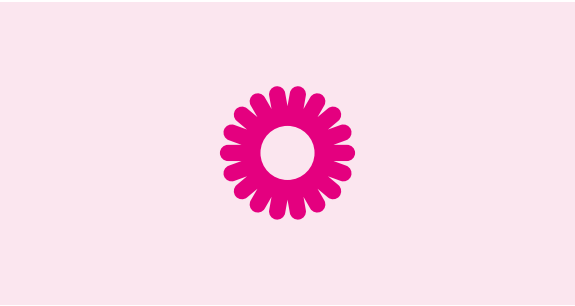

1 **Sew an eyelet.**

The sewing machine automatically performs lock stitching at the end of sewing and stops.

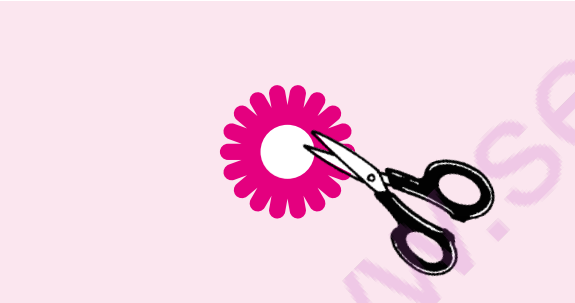

2 **Open a hole with an eyelet punch or a pair of scissors.**

This hole can be used for passing a string or ribbon or as a flower hole.

www.sewshop.eu

6.9. Decorative stitches

No.	Presser foot
201~240, 301~306, 401~422, 501~512, 601~684, 701~786, 801~837, 901~915, Letters, etc.	Manual buttonhole presser foot (I)

⚠ Leave the machine in Lock mode

* Refer to “12. List of stitch patterns” for the types of patterns.

■ Preparation before sewing

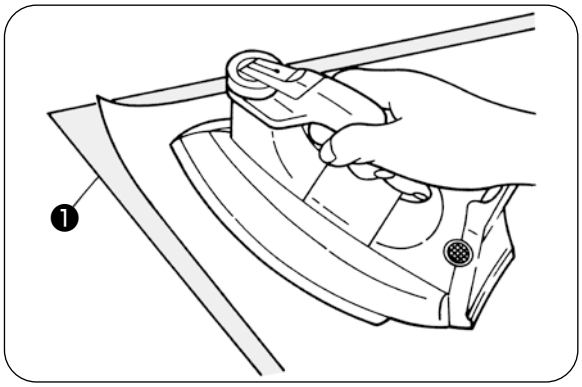

In order to beautifully sew a pattern on light-weight material ❶ , trial stitching is necessary while sticking a piece of interlining on the wrong side of the material.

Use an iron to attach a fusible interlining to the wrong side of fabric.

* If stitch length is excessively short, the bobbin thread may appear on the right side of material or may cause stitch gathering.
Be sure to adjust the darning and carry out trial stitching.

Setting > Darning adjustment
Darning adjustment
Try trial sewing, adjust while checking the pattern.
(Refer to page 104)

■ How to stitch a pattern (letters)

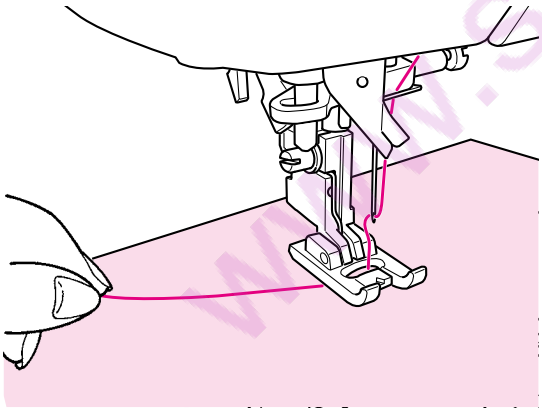

Pass down the needle thread through the presser foot hole and draw it sideways. Place the fabric underneath the presser foot and start.

The machine will stop automatically when sewing is finished.

* **Note that the sewing speed varies according to stitch patterns (letters) to be sewn.**
* **If the automatic thread trimmer is used while sewing, the machine starts to sew from the beginning.**
* **In case of condensed sewing, if the stitch length is too small, the stitches may get stuck.**

■ Disposing thread ends of jump stitches

Get rid of unnecessary thread on the front side of fabric by scissors.

www.sewshop.eu

6.10. Lace / feather / overlapping and tiling (blackwork) patterns

No.	Pattern	No.	Pattern	No.	Pattern	No.	Pattern
901		904		909		913	
902		906		910		914	
903		907		911		915	
904		908		912			

Presser foot
Manual buttonhole presser foot (I)

⚠ Leave the machine in Lock mode

Lace- / feather-like patterns can be produced by sewing patterns in parallel. In addition to the above, other patterns such as decorative patterns can be sewn with overlapped or tiled a wider variety of patterns.

■ How to sew a combination of patterns

- **For sewing pattern Nos. 901 and 902 in combination**

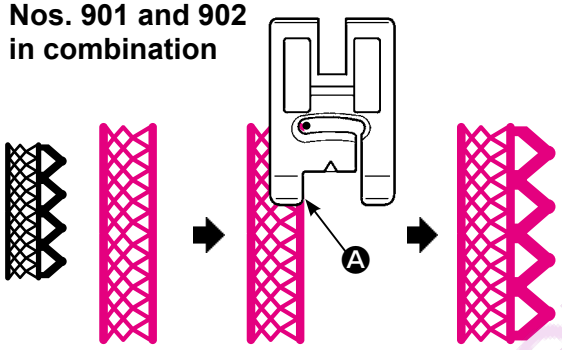

① Sew the pattern No. 901.

② Select the pattern No. 902. Sew the pattern No. 902 while aligning the inner edge of the presser foot with the edge of the pattern (Ⓐ).

- **For sewing pattern Nos. 772 and 776 in combination**

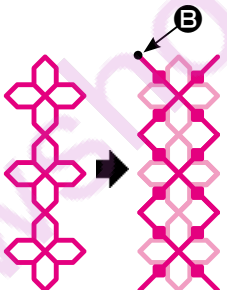

① Sew the pattern No. 772.

② Determine starting point Ⓑ of the pattern No.776 so that the pattern can be sewn accurately overlapped with the already-sewn pattern No. 772. Then, sew the pattern No. 776 over the already-sewn pattern No. 772.

- **For sewing pattern Nos. 778 ◭◮ and 778 in combination**

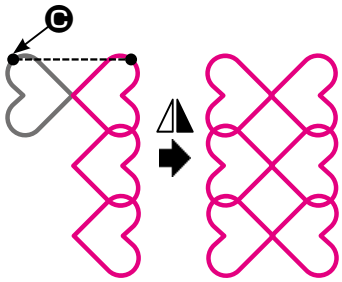

① Sew the pattern No. 778.

② Providing a space of approximately 7 mm from the already-sewn pattern No. 778, adjust starting position Ⓒ of the patterm No. 778 to the position that is same in height of the already-sewn pattern No. 778. Then, sew the pattern No. 778 with horizontally inverted.

Caution: In the case of tile stitching, patterns may be slightly misaligned depending on the patterns to be combined, material, thread and type of stitching to be used.

Example)

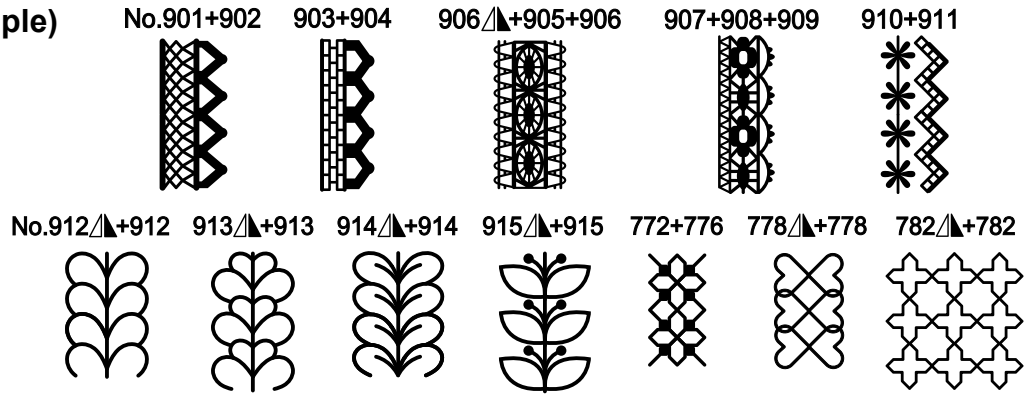

www.sewshop.eu

6.11. Scallop stitches

No.	Pattern	No.	Pattern	No.	Pattern	No.	Pattern
501		504		507		510	
502		505		508		511	
503		506		509		512	

Presser foot
Manual buttonhole presser foot (I)

Leave the machine in Lock mode

This stitch is used for decorating edging on items such as table cloths, collars on blouse, etc.

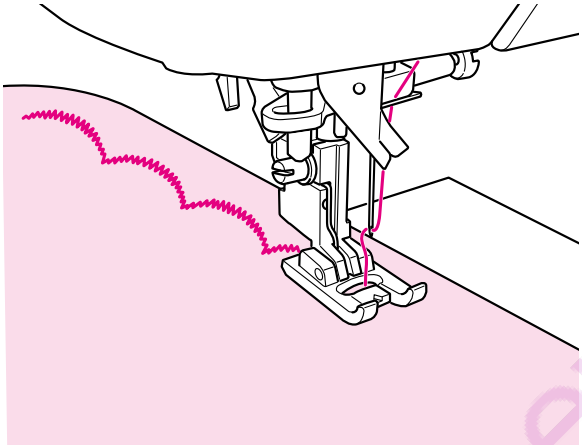

1 **To keep the pattern intact, leave some margin and sew on the edge of the cloth.**

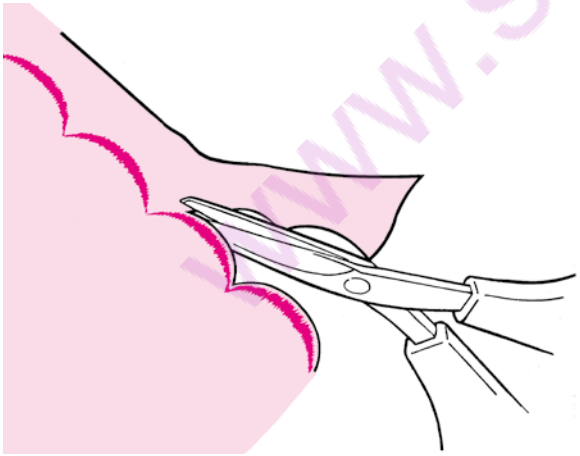

2 **Cut the sewn fabric carefully so that stitches are not cut by the scissors.**

Elongation

The length of the patterns can be adjusted.
(Other than the pattern No. 501) (Refer to page 98)

www.sewshop.eu

6.12. Random pattern

No.	Pattern	No.	Pattern	No.	Pattern	No.	Pattern
206		217		225		233	
208		219		227		235	
210		221		229		237	
212		223		231			

Presser foot
Manual buttonhole presser foot (I)

Leave the machine in Lock mode

Example)

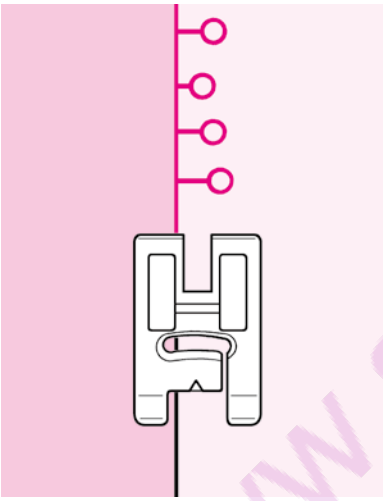

When sewing random stitch patterns, the zigzag width automatically changes by section. This means that the finished patterns provide a sense of fun.

www.sewshop.eu

6.13. Tapering

No.	Pattern	No.	Pattern	No.	Pattern
301		303		305	
302		304		306	

Presser foot
Manual buttonhole presser foot (I)

⚠ Leave the machine in Lock mode

For a tapering stitch pattern, the zigzag width can be set so that it is gradually increased at the start of sewing and is gradually decreased at the end of sewing.
Use the tapering stitch pattern for mitering, etc.

Example of use)

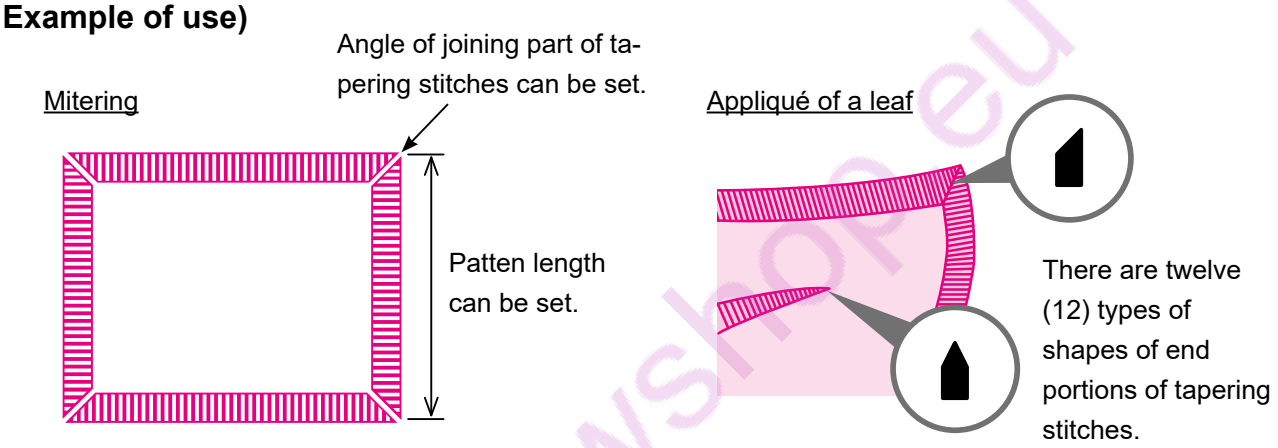

Angle and shape of tapering stitches)

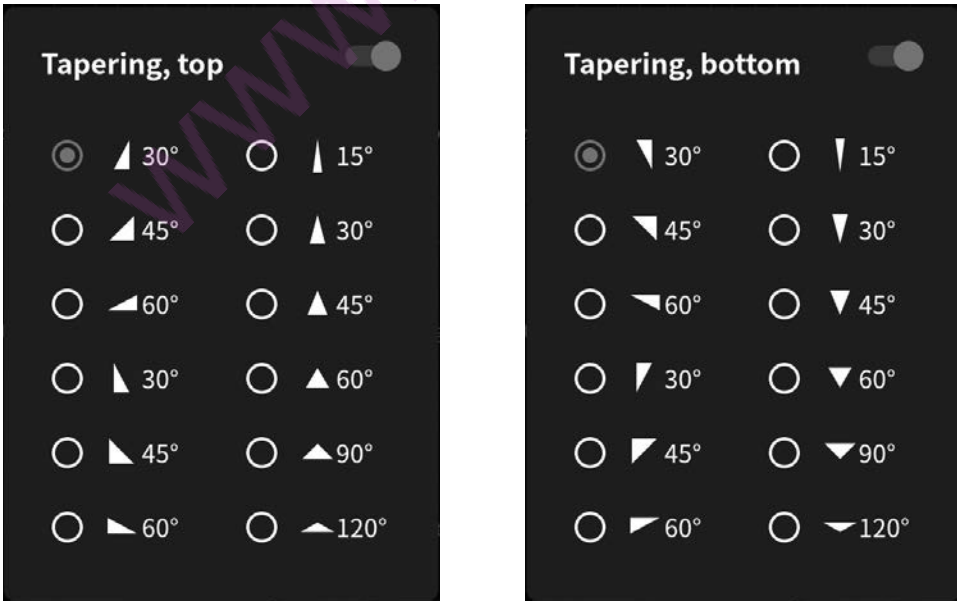

www.sewshop.eu

■ Setting the size of tapering stitch pattern

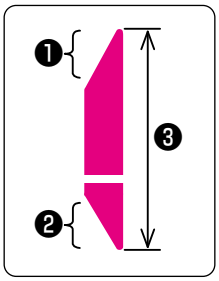

Tapering angles ❶ and ❷ and tapering length ❸ can be set according to the pattern you want to sew.

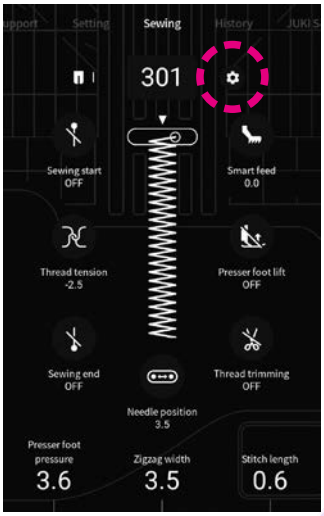

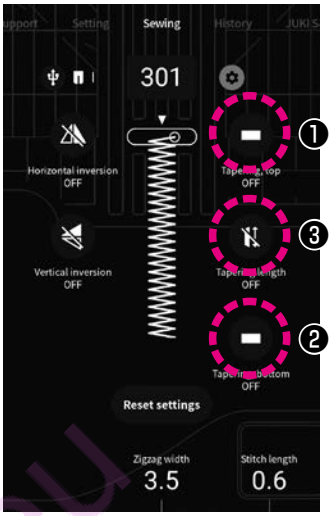

❶

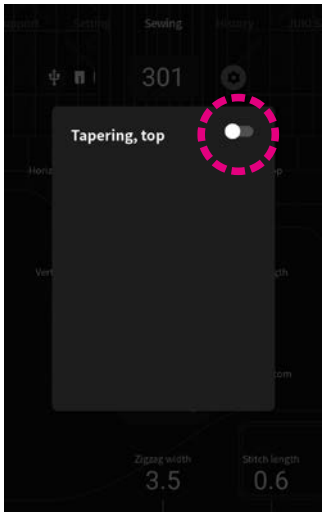

Place [Tapering, top] in ON.

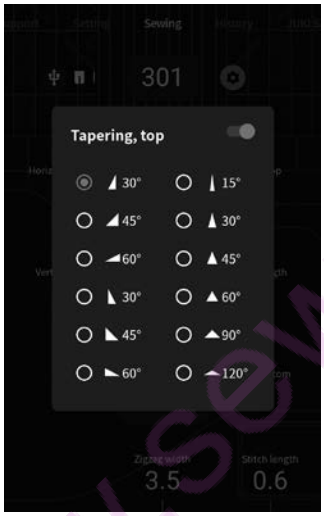

Select the angle and shape of the tapering stitch part.

❷

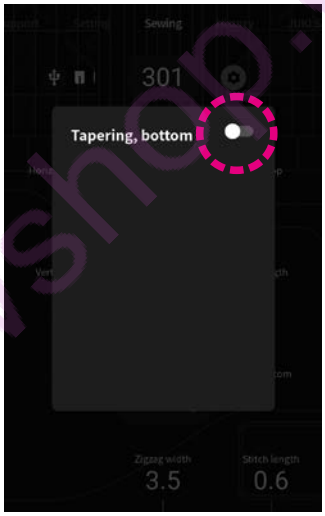

Place [Tapering, bottom] in ON.

Select the angle and shape of the tapering stitch part.

❸

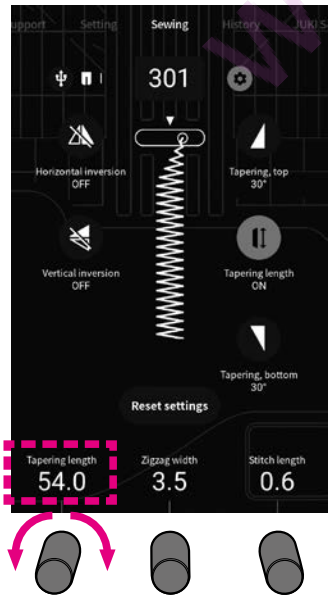

Set the length of the tapering stitch pattern by turning the adjusting dial.

● How to sew the pattern

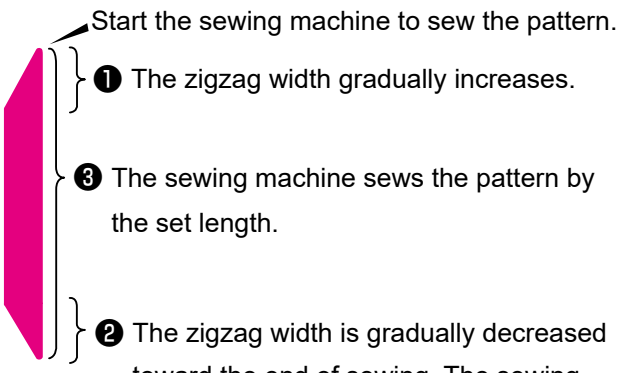

www.sewshop.eu

■ Manual stitching

Set angles ❶ and ❷ .

Start the sewing machine to sew the pattern.

❶ The zigzag width gradually increases.
When the set zigzag width is reached, the sewing machine continues sewing keeping that zigzag width.

Press the lock stitch button when the part you want to start ❷ is reached.

❷ The zigzag width is gradually decreased according to the set angle. Then, the sewing machine performs lock stitching at the end of sewing and automatically stops.

● Storing the length of the tapering stitch pattern in memory

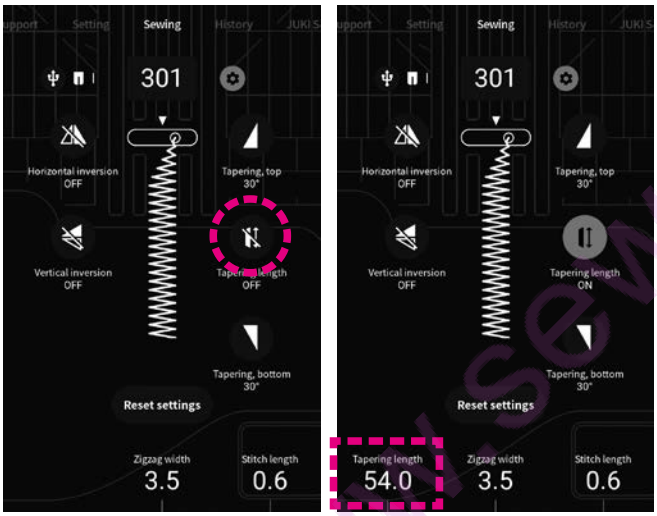

After you have completed sewing, the length of seam you have just sewn can be checked by setting [Tapering length] to ON.
If you re-start sewing from that state, you can sew tapering stitches by the same seam length in repetition.

◆ History

In the state that [Tapering length] is place in ON, the tapering length is also stored in memory to allow the data to be called up with the history tab.
The setting that has been used for sewing the pattern immediately before changing the pattern is stored in memory under the history tab.
If you want to store two or more settings for one pattern, it is necessary to store the settings one after another by changing the pattern each time.

www.sewshop.eu

6.14. Buttonhole stitches

* **The buttonhole length is automatically determined only by placing a button on the buttonhole presser foot.**
* **The machine can sew buttonholes for buttons with diameters of 0.7 - 3.2 cm.**
* **In case of stretchy fabrics, use non-elastic interlining on the wrong side of the fabric.**
* **Make sure to perform test sewing to see that the machine sews buttonholes correctly.**
* **Buttonhole Nos. 114 - 117 are for knit fabrics and should be used with a knit needle.**

Presser foot
Buttonhole presser foot (E)

⚠ Leave the machine in Lock mode

No.	Pattern	Application	
101		Standard buttonhole	Buttonhole for medium to heavy weight materials Standard buttonhole
102		Standard buttonhole	Manual 2-step buttonhole Use this buttonhole, when there is an overlapped section in the fabric or when you want to sew larger buttonhole than 3.2 cm diameter. (Refer to page 91)
103	MEM	Standard buttonhole	Manual 2-step buttonhole (Memory) * It is possible to store the size of buttonhole you have sewn once in memory.
104		Standard buttonhole	Buttonhole for heavy weight materials Stitch density is coarse. This pattern is used for coats, etc.
105		Standard buttonhole	Sews buttonhole double
106		Decorative	Decorative buttonholes
107		Rounded end	Buttonholes for women's blouses and children's clothes. Also for light weight materials
108		Rounded end	
109		Rounded end	

No.	Pattern	Application	
110		Keyhole	Keyhole buttonhole for heavy weight materials such as suits, jackets, coats, etc.
111		Keyhole	Round keyhole
112		Keyhole	Large and thick keyholes for heavy weight materials
113		Keyhole	For sewing buttons on the front plackets of pants, etc.
114		For knit	Buttonhole for light weight knit (also used as decorative buttonhole)
115		For knit	Buttonhole for medium weight knit (also used as decorative buttonhole)
116		For knit	Buttonhole for light weight knit Sews buttonhole double
117		For knit	Buttonhole for medium weight knit Sews double buttonhole
118		Decorative	Decorative buttonholes Decorative buttonhole which look like hand-sewn
119		Decorative	
120		Decorative	
121		Basting stitch for buttonholing (Refer to page 90)	

www.sewshop.eu

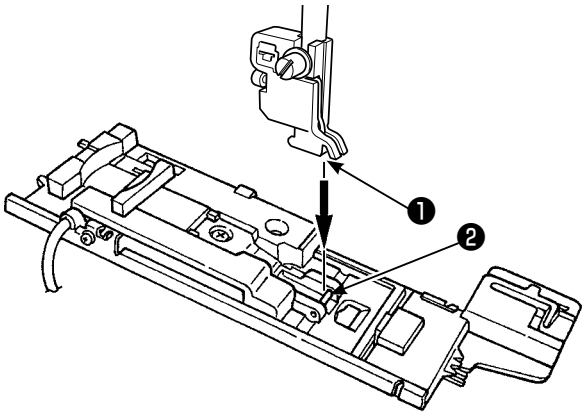

1 Set the presser foot.

Lift the needle and lift the presser foot.
Align the groove ❶ of the presser foot holder with the ❷ of the presser foot and lower the presser foot holder to set.

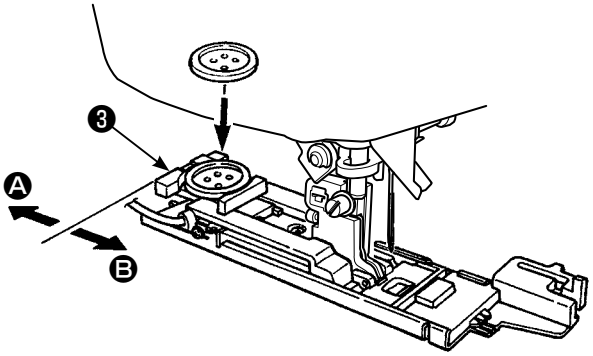

2 Set the button.

Pull the button holder ❸ toward Ⓐ, place the button on the button holder, and then push the holder toward Ⓑ to set the buttonhole length.

*** Check the following points after setting the presser foot and then start to sew buttonholes.**

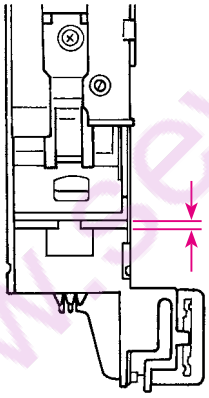

Check that there is a clearance.

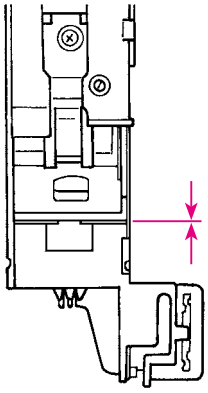

If there is not a clearance, the machine will not sew neat stitches.

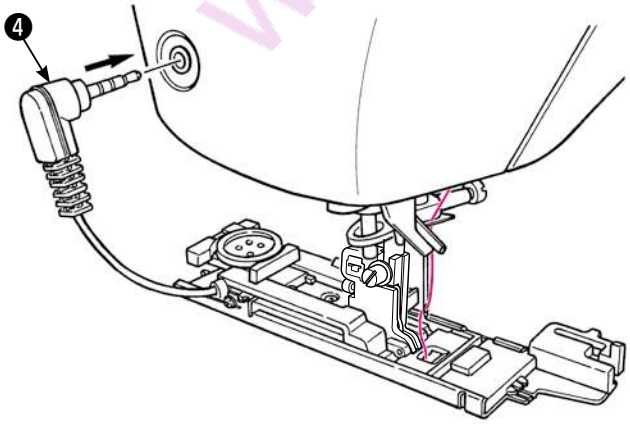

3 Set the buttonhole sensor pin ❹ .

Insert the sensor pin into the sensor pin hole at the face plate cover.

* <u>**Insert the pin into the hole completely.**</u>

* **If the machine starts to sew without inserting the pin into the hole, the following message will be shown on the display.**

Set the sensor pin and restart.

www.sewshop.eu

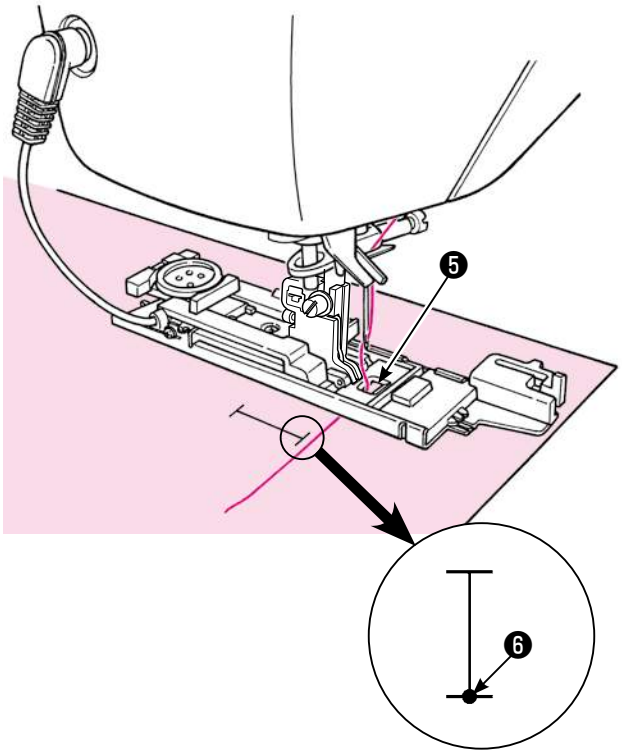

4 Place the fabric under the presser foot.

Raise the presser foot, pass the needle thread through the hole on the presser foot ❺ and pull it out sideways.
Place the fabric under the presser foot, align the marking with the sewing-start point ❻ . Penetrate the needle into the fabric by turning the hand wheel and lower the presser foot.

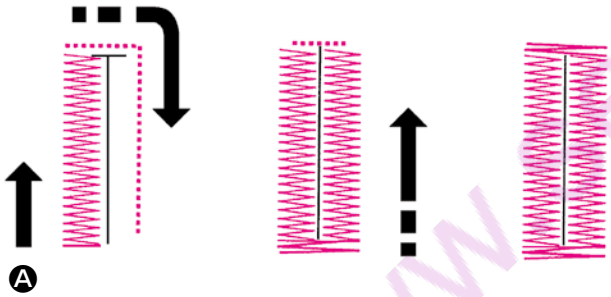

5 Start sewing. Ⓐ

The machine will stop automatically after sewing the buttonhole.

* **If a buttonhole of the same size will be sewn again, push the thread trimming button to trim the threads and raise the presser foot. Under this condition move to another point, lower the presser foot and then start sewing.**
* **Do not change stitch length and/or zigzag width during buttonholing. Otherwise this will cause imbalanced stitches.**
* **If thread trimming button is pushed while sewing buttonhole, the machine will stop and will not complete the buttonhole.**

* Depending on material to be sewn and weaving direction of the material, there might be a slight difference in zigzag widths between right and left lines of buttonholes. Test sewing is recommended.

www.sewshop.eu

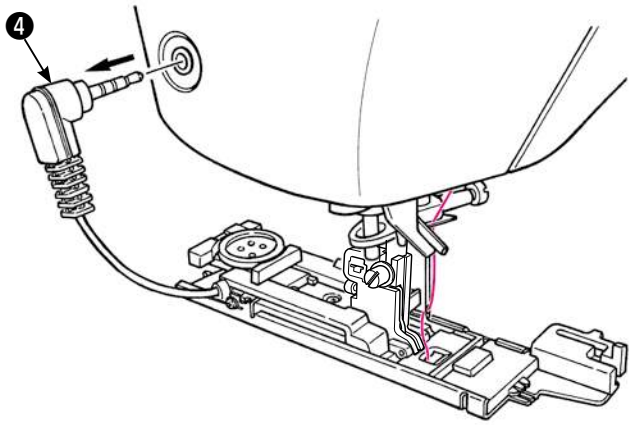

6 Unplug the sensor pin ❹ after sewing.

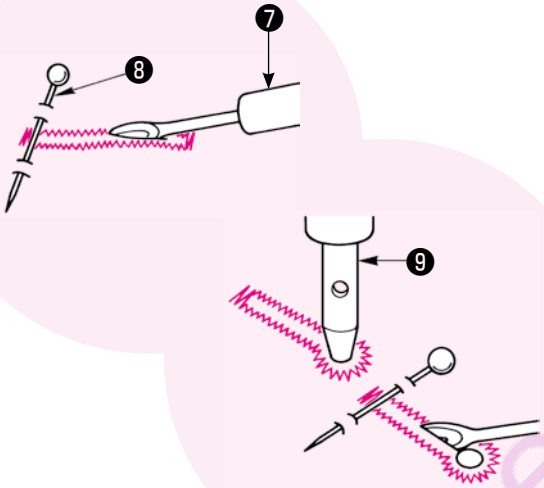

7 Opening the buttonhole using a ripper ❼ .

[Double bartack]
Pierce a stopper pin ❽ at the bartack and open the buttonhole with a ripper ❼ . Be careful not to cut the stitches.

[Keyhole buttonhole]
Place a cardboard under the buttonhole and make a hole with the eyelet punch ❾ . Then pierce a stopper pin at the bartack and open the buttonhole with a ripper.

www.sewshop.eu

● Buttonhole clamping plate

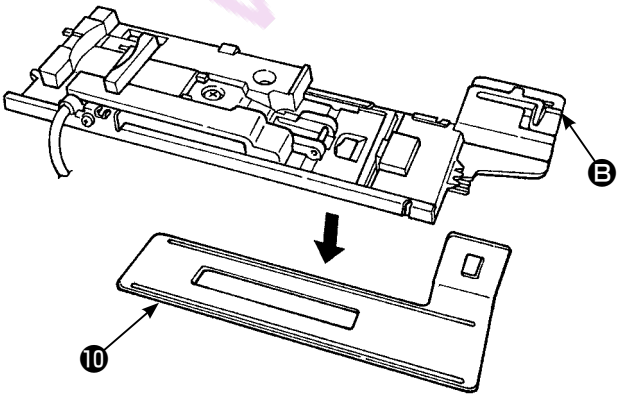

⚠ Leave the machine in Lock mode

It will be easier to sew buttonholes on the thin fabrics and/or near the overlapped sections, if the clamping plate is used.

1. **Attach the buttonhole presser foot to the presser foot holder, with the clamping plate ❿ together.**
2. **Place the fabric between the presser foot and the clamping plate.**

* You can remove the clamping plate by holding Ⓑ.

■ When changing the width of the buttonhole

Turn the adjusting dial.

> *** The setting of the buttonhole width and stitch length will be cancelled when the power is shut down or another pattern is selected.**

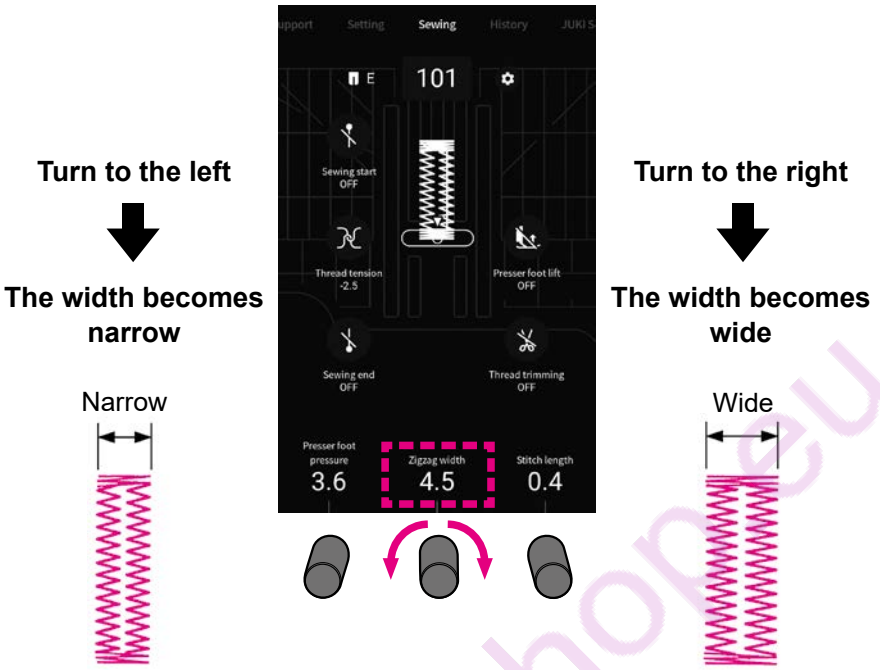

■ When changing the density of the seam

Turn the adjusting dial.

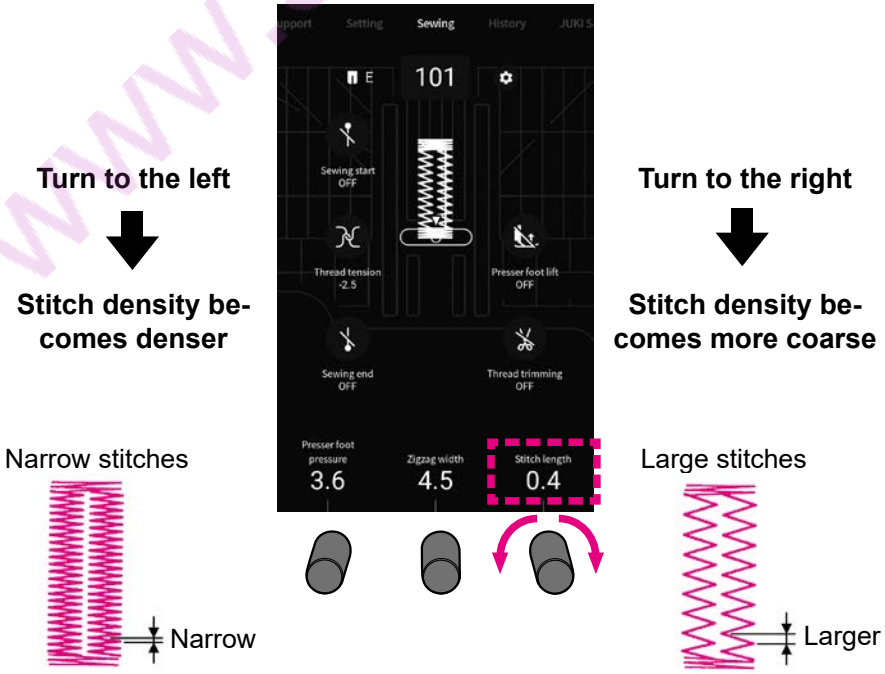

www.sewshop.eu

■ Change of seam width of buttonhole

* **The knife width is reset when you turn the power OFF.**

The seam width of buttonhole is changeable.

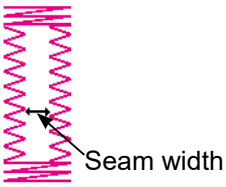

Standard Large Small

* Initial value has been factory-set to “Standard”.

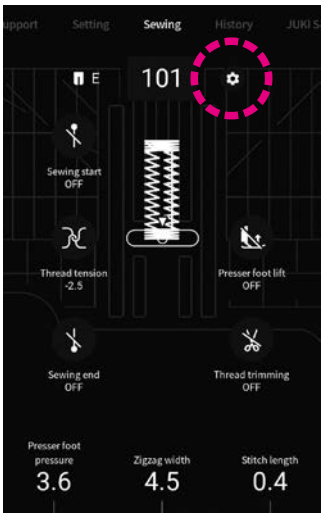

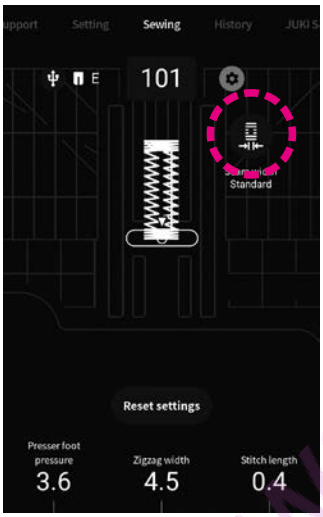

Invert the pattern. Then, press .

The knife width can be changed in three steps by pressing the icon.

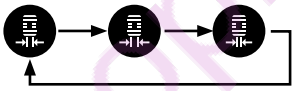

www.sewshop.eu

■ Buttonhole with gimp

No.	Pattern	Presser foot
101		Buttonhole presser foot (E)

⚠ Leave the machine in Lock mode

Buttonholes with gimp thread prevent the buttonholes from stretching and can make them more secure.

*** A buttonhole with gimp thread should be sewn using the double bartack pattern (Pattern No. 101)**

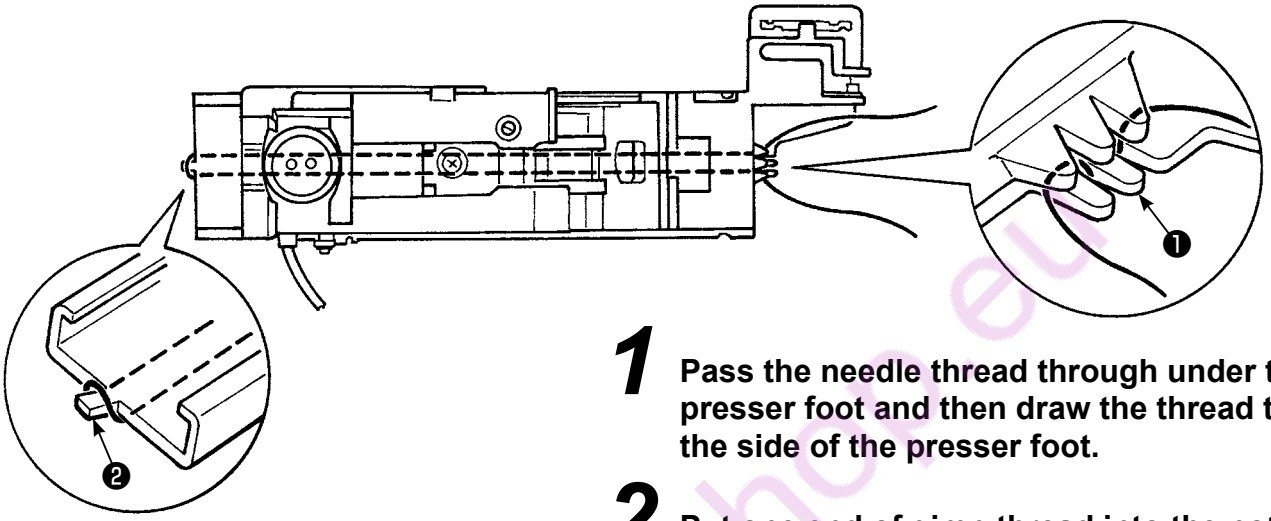

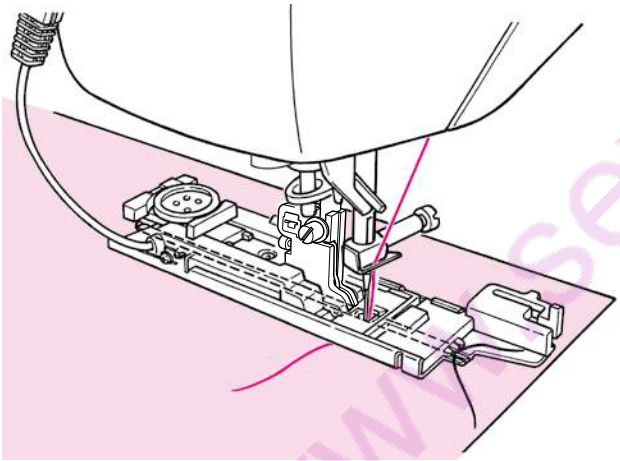

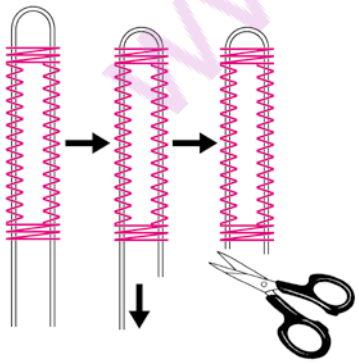

1 **Pass the needle thread through under the presser foot and then draw the thread to the side of the presser foot.**

2 **Put one end of gimp thread into the notch ❶ at the front right side of buttonhole presser foot, pull the gimp thread under the presser foot and thread it at the hook ❷ of the presser foot.**

3 **After threading at the hook, pull the gimp thread back under the presser foot and put it into the notch at the front left side of the presser foot firmly.**

4 **Bring down the needle to the sewing start point and lower the presser foot.**

5 **Sew the buttonhole.**

6 **Pull the left gimp thread to take off slack and cut excess gimp thread.**

www.sewshop.eu

■ Basting stitch for buttonholing

No.	Pattern
121	

This stitch is used as basting for Pattern No. 101 Buttonholing.
It is also applicable to welt-buttonholing.

6.15. Manual 2-step buttonhole

No.	Pattern
102	
103	MEM

Presser foot
Manual buttonhole presser foot (I)

⚠ Leave the machine in Lock mode

*** Refer to page 88 when you want to change the zigzag width and stitch length of a buttonhole.**

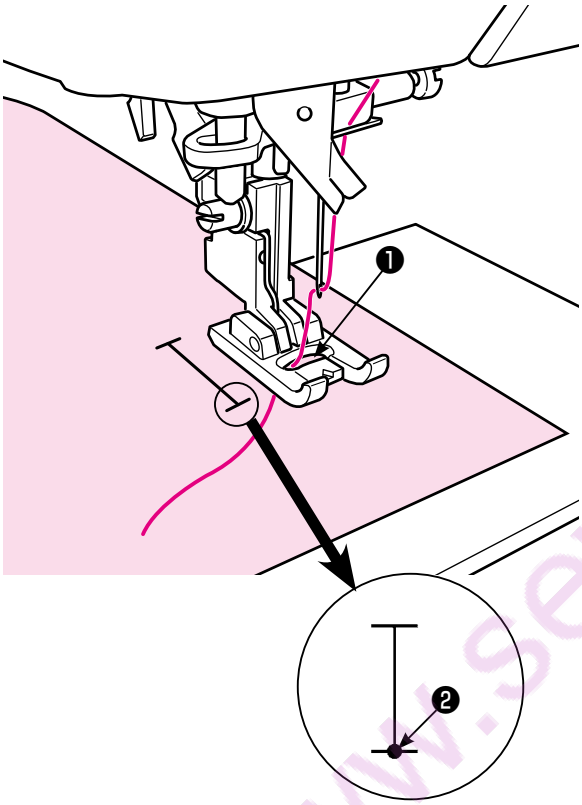

1 **Set the manual buttonhole presser foot (I).**

2 **Pass the needle thread through the hole of the presser foot ❶ and pull it out sideways together.**

3 **Bring down the needle on the sewing start point ❷ and lower the presser foot.**

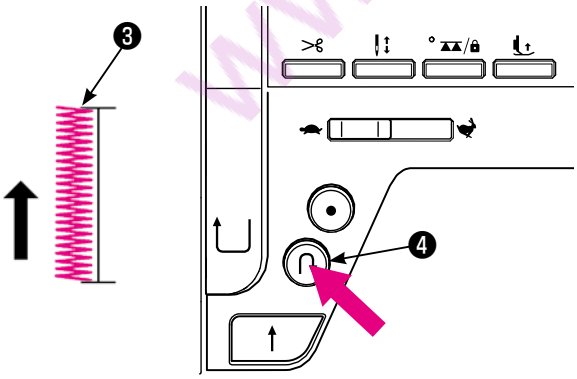

4 **Push start/stop button to sew.**

* At this time, if the start/stop button is pushed, the machine will stop sewing. And if the start/stop button is pushed again, then the machine will continue to sew the left side of the buttonhole.

Push the reverse stitch button ❹ when it reaches the necessary length ❸ of the left side of the buttonhole.
Sew bartack and the right side of the buttonhole, then the machine sews bartack and right side of the buttonhole.

www.sewshop.eu

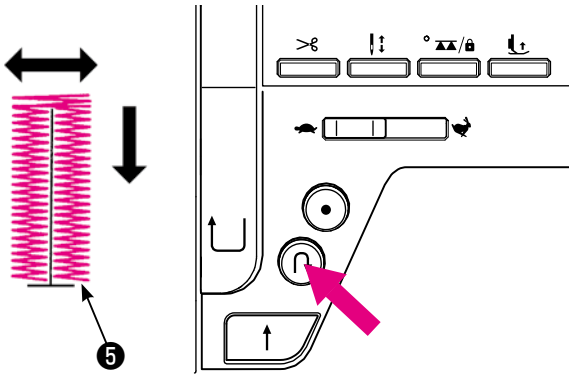

5 **Push reverse stitch button when it comes to the sewing start point ❺ .**

6 **Sew bartack and lock stitches until the machine stops automatically.**

Trim the thread. Lift the presser foot. Then, remove the material from the sewing machine.

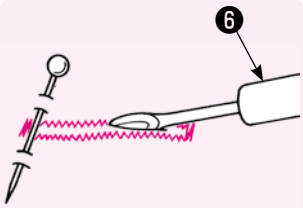

7 **Pierce a stopper pin at the bartack and open the buttonhole with a ripper ❻ . Be careful not to cut the stitches.**

* **In the case of a 2-step buttonhole, sewing direction of the left and that of the right side is different. Due to this and according to fabrics to be sewn, it may be possible that the density of each side looks different.**

* MEM **No. 103 In the case of 2-step buttonhole (Memory)**

Since the length of a buttonhole that is sewn for the first time is stored in memory, step of procedure *4* is not required for buttonhole for the 2nd time and beyond.

If you want to change the buttonhole length stored in memory, any other pattern should be selected.

www.sewshop.eu

6.16. Sewing buttons

No.	Pattern	Presser foot
122	⊖	Manual buttonhole presser foot (I)

⚠ Leave the machine in Lock mode

* **Do not use the automatic thread trimming function when sewing buttons.**

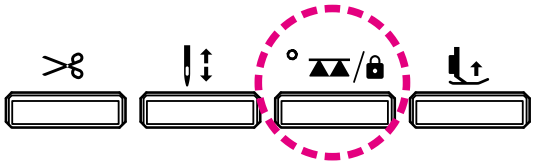

1 **Lower the feed dog by pressing the feed dog UP / DOWN / LOCK MODE button.**

Lamp lights up: The feed dog is at its lower position
Lamp goes out: The feed dog is at its upper position.

Example)

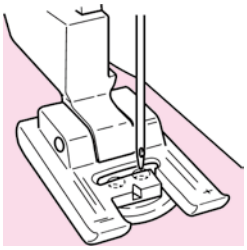

3.5 mm

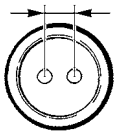

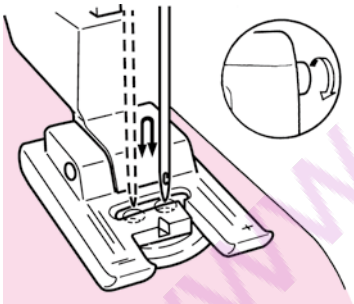

2 **Place a button under the presser foot and adjust the zigzag width according to the distance between holes in button.**

3 **Make sure that needle enters holes in button, by turning hand wheel manually.**

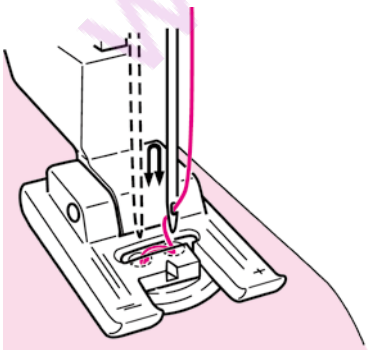

4 **Carry out sewing while turning the handwheel by hand.**

⚠ If you pull the material, the button could be moved from the correct position causing needle breakage.
Buttons can be sewn without fail by using the separately-available button sewing presser foot (refer to page 124).

5 **Trim needle and bobbin threads by about 10cm (4 inches) long after sewing.**
Make a knot to secure the stitches.

www.sewshop.eu

6.17. Quilting (free motion)

No.	Pattern	Presser foot
001		Quilt presser foot (for the ruler) (Q)

⚠ Leave the machine in Lock mode

* **Be sure to sew straight stitch pattern (center stitch base).**

In the case of performing free-motion stitching using a zigzag pattern, the separately-available quilt presser foot (zigzag type) and presser foot joint are necessary.

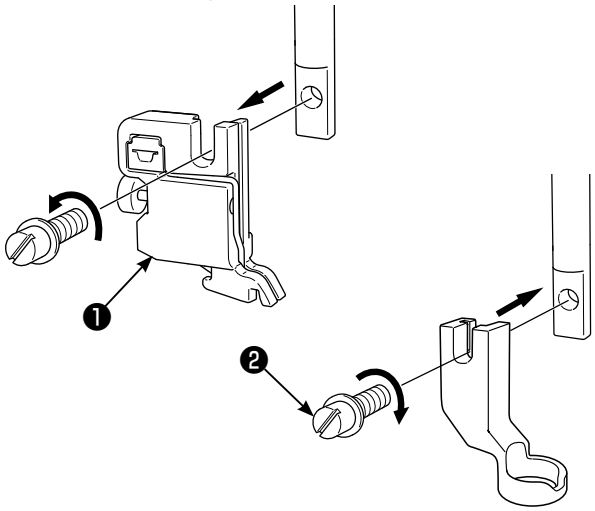

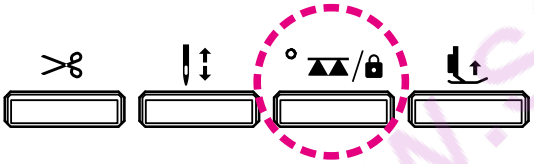

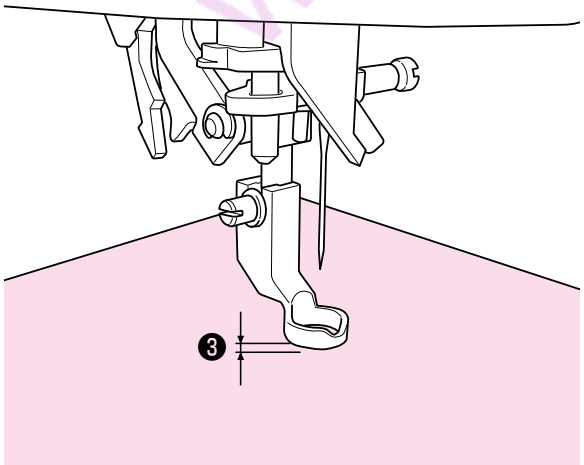

It is called free motion quilting when moving the fabrics freely towards any directions without using the feed dog of sewing machine.
Free curve seams, etc. can be produced with the feed dog lowered (drop feed) regardless of the direction of sewing (i.e., 360 degrees) by moving the material by hand.

1 **Put top layer of fabric with patchwork and/or appliqué, quilting cotton and bottom fabric together by using pin or basting stitches.**

2 **Assemble the quilt presser foot.**

Raise the presser bar. Loosen the setscrew for presser foot holder and remove the presser foot holder ❶ . (Refer to page 20)
Set the quilting foot and tighten the setscrew ❷ for presser foot.

3 **Lower the feed dog by pressing the feed dog UP / DOWN / LOCK MODE button.**

Lamp lights up: The feed dog is at its lower position
Lamp goes out: The feed dog is at its upper position.

4 **Place the fabric underneath the presser foot and lower the presser foot.**

5 **Adjust the presser foot height according to the material thickness.**

- Height of the presser foot can be changed with the presser foot screw.
- It is also possible to adjust the presser foot height using the micro-lifter height setting function. (Refer to page 38)

The material can be moved smoothly with no resistance by adjusting the presser foot height to about 1 mm ❸ above the material.

* The sewing machine is capable of sewing beautifully even multi-layered sections of material by decreasing the presser foot pressure.

www.sewshop.eu

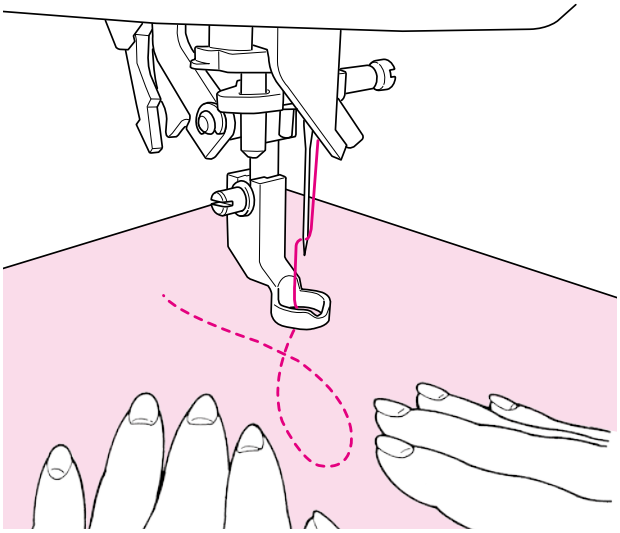

6 **Use both hands to hold the fabrics and move it without letting it loose.**
The target stitch length is about 1.5 to 2.0 mm.

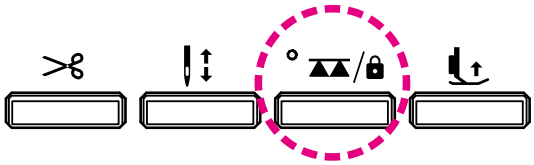

7 **When you have completed sewing of free-motion quilting, press the feed dog UP / DOWN / LOCK MODE button to lower the feed dog.**

The feed dog will be up and engaged at the same time as the machine starts to sew.

*** The quilt ruler is also applicable.**

Tips

● How to lock stitches

- At sewing start, pull up the bobbin thread on the top layer of the fabric, hold both needle and bobbin threads together and sew 3 stitches on the same point. After that move fabrics as you wish.
  In this way, stitches on the wrong side of the fabrics look neat.
- At sewing-end sew 3 stitches on the same point and stop.

● How to sew stitches with the same stitch length

- When the foot controller is used, the fabrics can be guided by both hands and you can move the fabrics freely.
- Set the speed controller to medium or medium low first, press the foot controller completely and move the fabrics.
  → if stitches become too large, set the speed controller to “faster”
  → if stitches become too small, set the speed controller to “slower”.

www.sewshop.eu

6.18. Hand look quilt stitches

No.	Pattern	Presser foot
418		Manual buttonhole presser foot (I)

⚠ Leave the machine in Lock mode

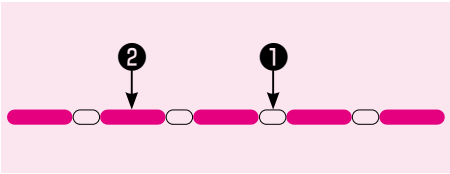

Handsewn look seams can be sewn by using a transparent thread as the needle thread.

❶ Needle thread
❷ Bobbin thread

www.sewshop.eu

6.19. Quilting (quilt guide)

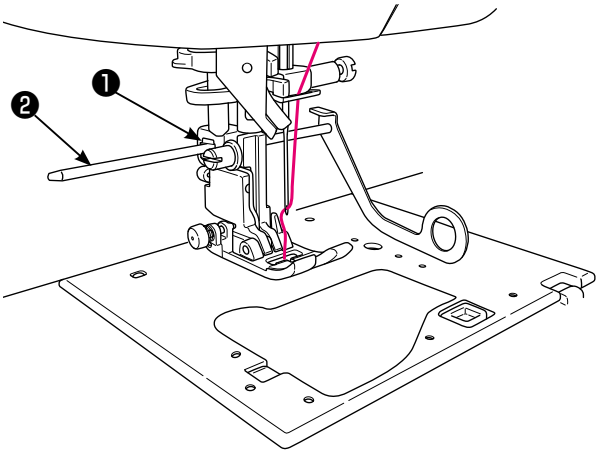

1 **Insert the quilt guide ❷ into the groove of the presser foot holder ❶ .**

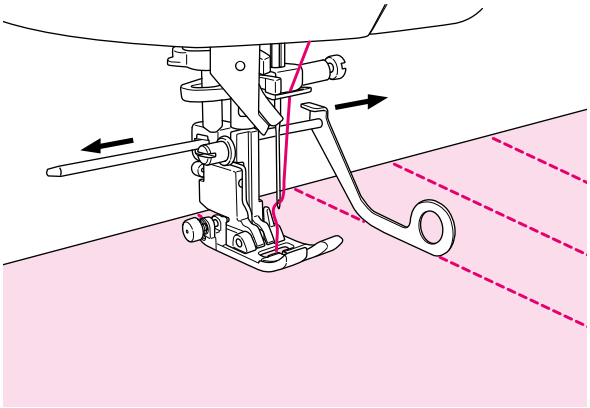

2 **Sew while tracing the stitches with the tip of the quilt guide.**

Distance between sewing lines can be adjusted freely.

www.sewshop.eu

6.20. Elongation

No.	Pattern	No.	Pattern	No.	Pattern	No.	Pattern
502		510		680		836	
503		677		681		837	
508		678		682			
509		679		835			

Presser foot
Manual buttonhole presser foot (I)

Leave the machine in Lock mode

The pattern length can be changed without changing the stitch density of a pattern.

Setting range: “×1” - “×5”
* Initial value has been factory-set to “×1”.

Single mode

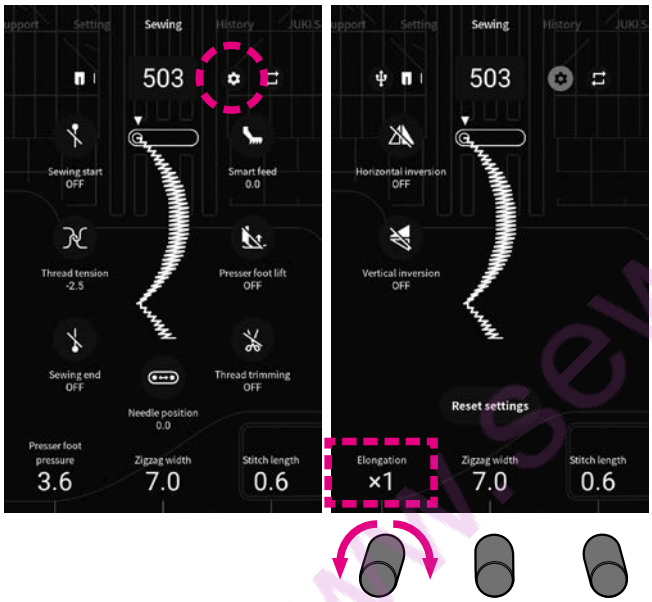

Invert the pattern. Then, press ⚙ .

Set the elongation size by turning the adjusting dial.

Combination mode

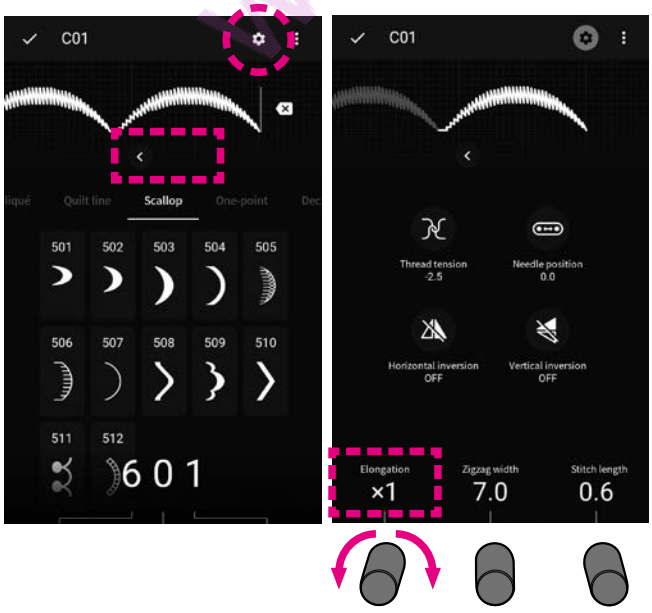

Select the pattern you want to edit with ‹ › .

Press ⚙ .

Set the elongation size by turning the adjusting dial.

www.sewshop.eu

6.21. Stitch in ditch quilting

No.	Pattern	Presser foot
001		Edge Sewing presser foot (R)

⚠ Leave the machine in Lock mode

This is for quilting the edge of patchworks and appliqués. The machine will sew the lower (thinner) side of the fabric layers. As a result, the stitches will not be noticeable and have an effect to make the design look three dimensional or emphasized.

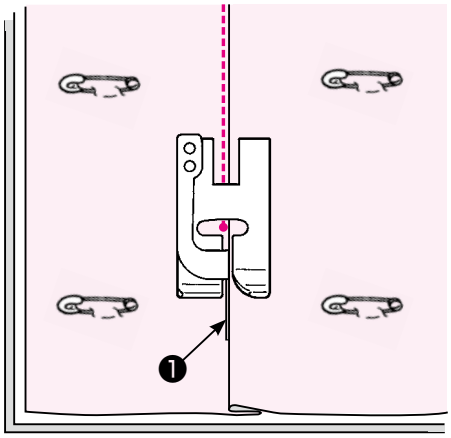

1 **Put the top layer of fabric with patchwork and/or appliqués, quilting cotton and bottom layer of fabric together by pin or basting stitches.**

2 **Put the guide of the presser foot along with the crease and sew.**

The needle enters behind the guide, so that the edge of the crease can be sewn.

If the desired points can not be sewn, adjust the needle position. (Refer to page 40)

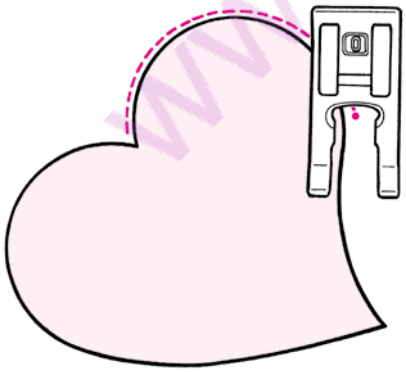

● Curved concealed quilting

Use manual buttonhole presser foot (I) or the open toe presser foot (O). Sew curves by lifting the presser foot and changing the direction very often.

Also this can be done by free motion with the quilt presser foot. (Refer to page 94)

www.sewshop.eu

6.22. Attaching a quilt sleeve

No.	Pattern	Presser foot
044		Edge Sewing presser foot (R)

⚠ Leave the machine in Lock mode

This stitch type is narrow blind stitch for attaching a sleeve (material to be sewn on the back of quilted tapestry for passing a rod) to the quilt.
The narrow blind stitches are not likely to be visible from the top surface of the quilted fabric.

■ How to make a quilt sleeve

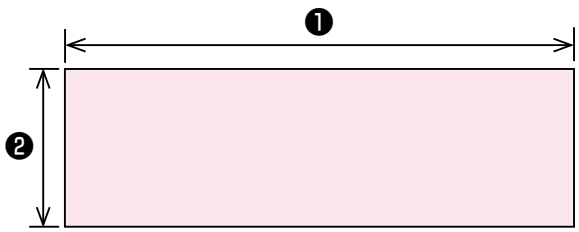

1 **Prepare a material for quilt sleeve.**

❶ Quilting width
❷ 22cm

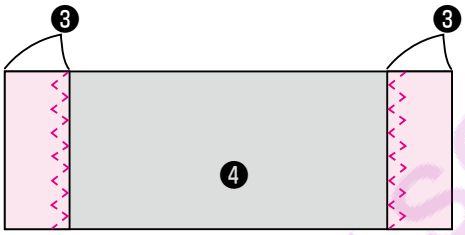

2 **Fold both ends by 2 cm respectively. Sew the folded edges with 2-step zigzag stitches (zigzag width 0.7 cm, stitch length 0.1 cm).**

* Perform blind stitching at a slow sewing speed in order to prevent puckering.

❸ 2cm
❹ Quilt sleeve (back)

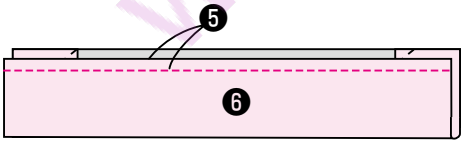

3 **Sew the quilt sleeve as illustrated in the figure.**

❺ 1cm
❻ Quilt sleeve (top)

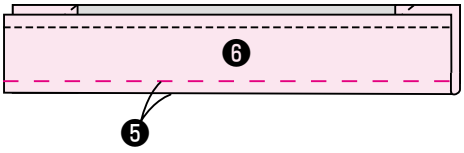

4 **Manually sew basting stitches on the loop side of the folded edge.**

❺ 1cm
❻ Quilt sleeve (top)

www.sewshop.eu

■ Attach the quilt sleeve to the quilted fabric

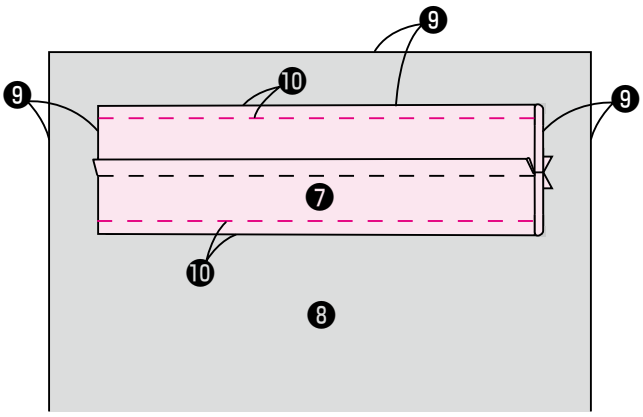

5 **Sew basting stitches as illustrated in the figure.**

❼ Quilt sleeve (top)
❽ Quilted fabric (back)
❾ 2cm
❿ 0.2cm

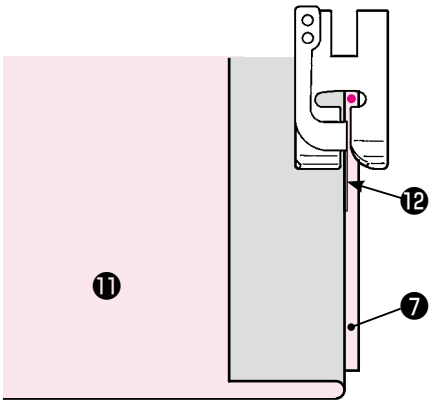

6 **Fold the quilted fabric at the basting stitch seam. Join the quilt sleeve to the quilted fabric while pressing the presser foot guide against the folded edge of the quilted fabric.**
Perform lock stitching at the start and end of sewing by pressing the reverse stitch button.

❼ Quilt sleeve (top)
⓫ Quilted fabric (top)
⓬ Guide

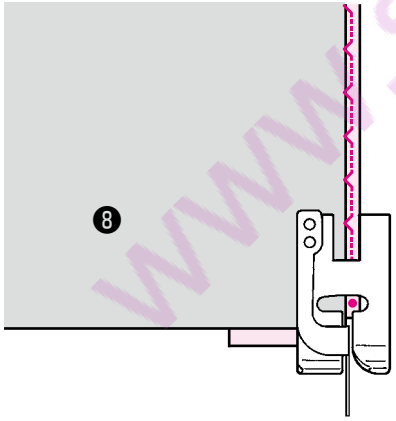

7 **For the opposite side, fold the quilted fabric at the basting stitch seam and join the quilt sleeve to the quilted fabric while pressing the presser foot guide against the folded edge of the quilted fabric.**

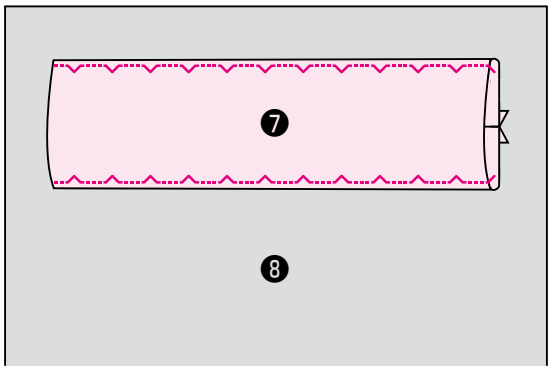

8 **After you have completed sewing, remove the basting stitch seam.**

www.sewshop.eu

7. Operation of the operation panel

7.1. Support

Main usage of the sewing machine can be checked.
Select the item you want to check.

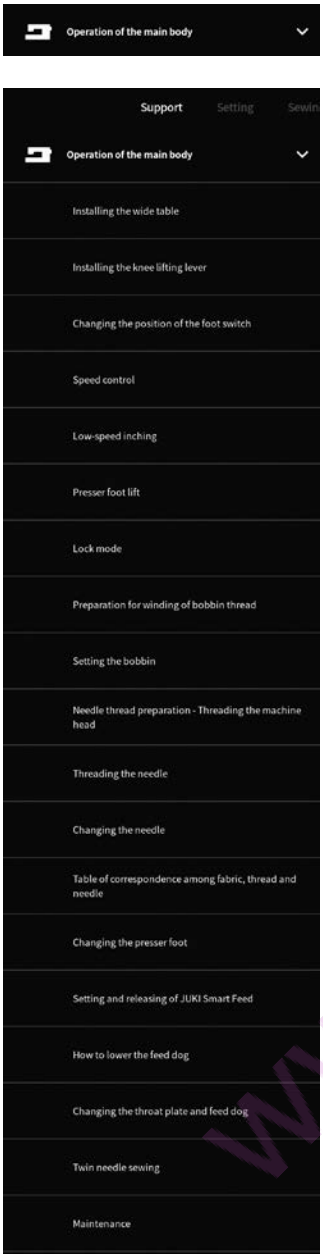

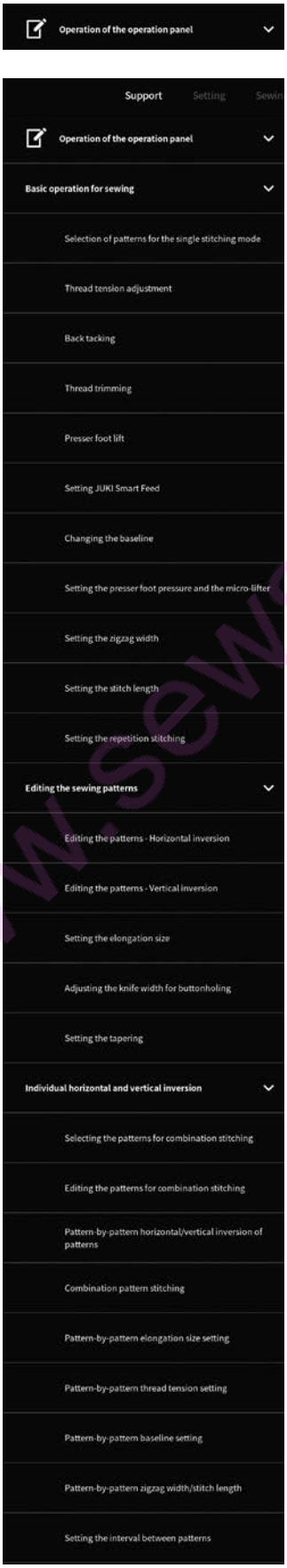

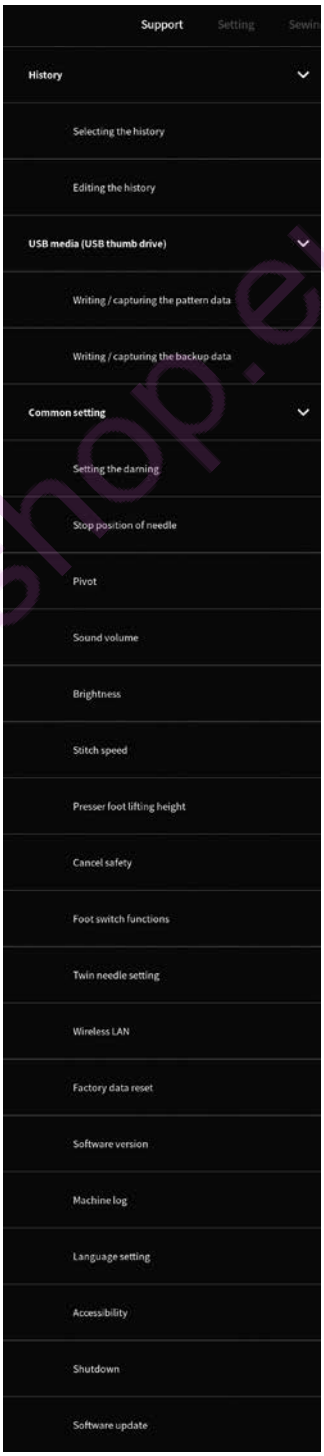

www.sewshop.eu

7.2. Setting

Functions (17 kinds) cab be set/changed.

		Application	Default setting
①	Darning adjustment	Adjust the shape of stitch pattern.	0
②	Stop position of needle	It is possible to set the position of the needle (upper or lower position) at the time of stopping the sewing machine.	Lower stop
③	Pivot	It is possible to set so that the presser foot automatically goes up when the sewing machine stops with its needle down.	OFF
④	Sound volume	Volume of the sound that is produced when the sewing machine is started up or when the icon on the operation panel is pressed can be changed.	-
⑤	Brightness	Brightness of the operation panel or sewing area can be adjusted.	-
⑥	Stitch speed	Sewing speed at the start of sewing and reverse stitching can be set.	Low speed
⑦	Presser foot lifting height	The machine can be set to the presser foot lifting amount.	6mm
⑧	Cancel safety	The sewing machine can be set to allow operation even when the presser foot is lifted.	-
⑨	Foot switch functions	Function can be selected for foot switch.	Reverse stitch
⑩	Two needles	The sewing machine can be set to perform twin-needle stitching.	OFF
⑪	Wireless LAN	It is possible to connect the sewing machine to the wireless LAN.	-
⑫	Factory data reset	Sewing machine data can be initialized.	-
⑬	Software version	Software version can be checked. *It is also possible to update the software.	-
⑭	Machine log	Sewing machine log can be checked. *Writing and capturing of the backup data can also be carried out.	-
⑮	Language	The language used for displaying messages, etc. can be changed.	(Depending on destination)
⑯	Accessibility	The color of the screen can be changed.	OFF
⑰	Shutdown	It is possible to turn the power OFF with the data protected.	-

www.sewshop.au

① Darning adjustment

Adjust the shape of stitch pattern.
Adjustable range: -20 - 20
Check the longitudinal balance of feed when you want to sew a pattern beautifully, or having changed the material, thread or interlining.
This adjustment value reflects all patterns.

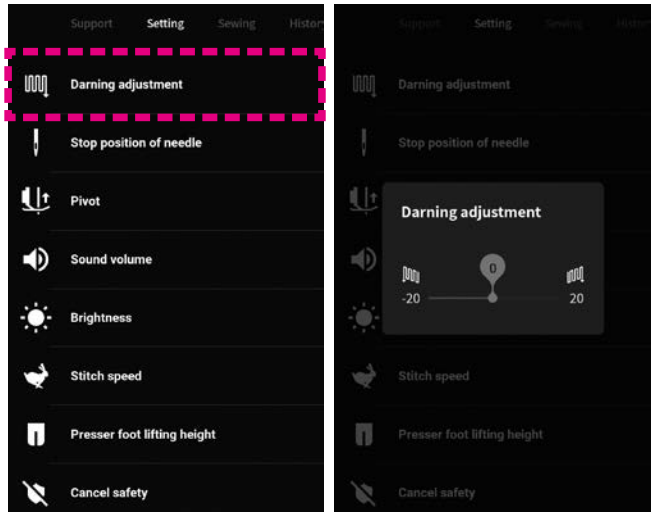

Select [Darning adjustment] from [Setting].

Try trial sewing, adjust while checking the pattern. Adjust the darning by sliding the slide bar to the right and left.

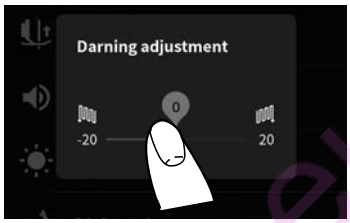

When you tap the portion outside the setting screen, the screen returns to the common setting screen.

○ Correct shape	× When right side is higher than left side	× When right side is lower than left side
	Increase the numeric value. Adjust the shape of darning stitches while performing trial sewing.	Decrease the numeric value. Adjust the shape of darning stitches while performing trial sewing.

www.sewshop.eu

② Stop position of needle

It is possible to set the position of the needle (upper or lower position) at the time of stopping the sewing machine.

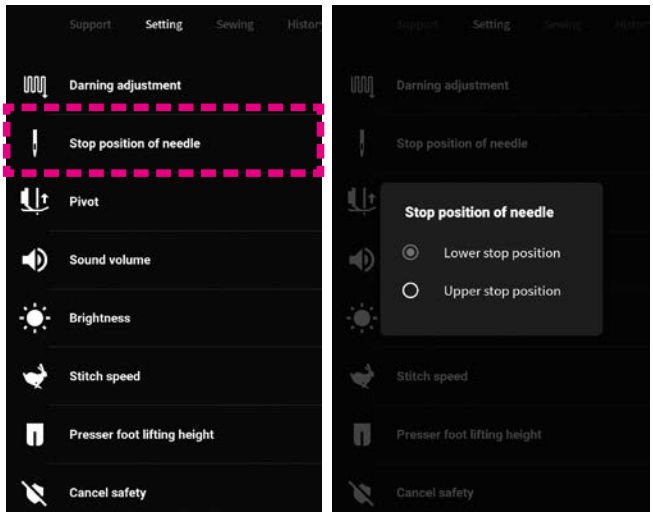

Select [Stop position of needle] from [Setting].

Select the “Lower stop position” or the “Upper stop position”.

When you tap the portion outside the setting screen, the screen returns to the common setting screen.

③ Pivot

It is possible to set so that the presser foot automatically goes up when the sewing machine stops with its needle down.

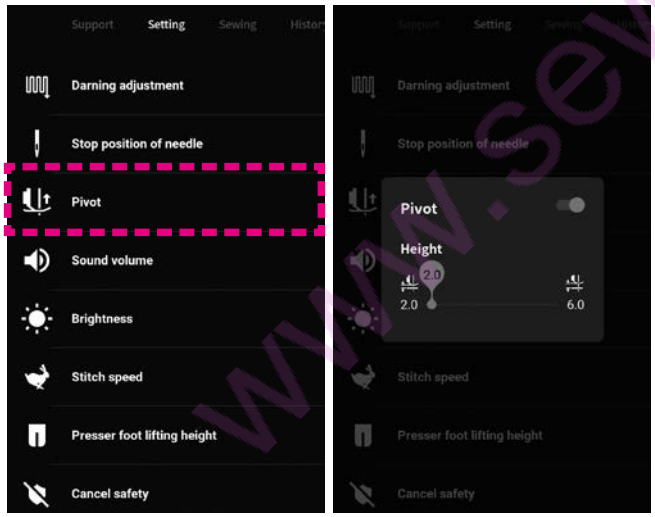

Select [Pivot] from [Setting].

- **Setting the ON / OFF of the pivot function**

  : ON

  : OFF

- **Setting the pivot height**

  Set the pivot height by sliding the slide bar to the right or left.

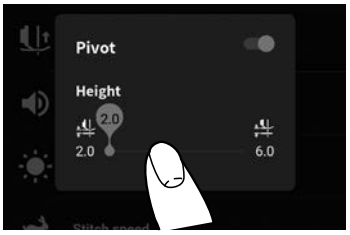

When you tap the portion outside the setting screen, the screen returns to the common setting screen.

www.sewshop.eu

④ Sound volume

Volume of the sound that is produced when the sewing machine is started up or when the icon on the operation panel is pressed can be changed.

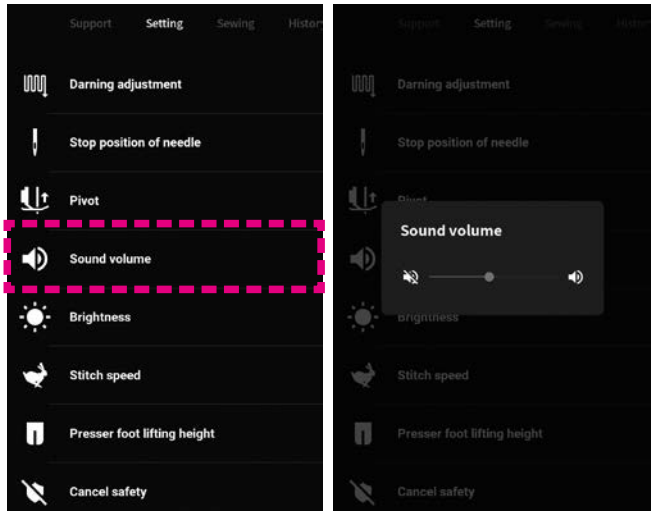

Select [Sound volume] from [Setting].

Adjust the sound volume by sliding the slide bar to the right or left.

The sound volume is decreased

The sound volume is increased.

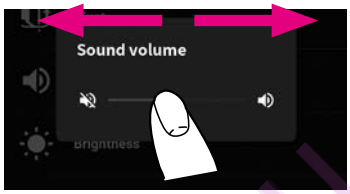

When you tap the portion outside the setting screen, the screen returns to the common setting screen.

⑤ Brightness

Brightness of the operation panel or sewing area can be adjusted.

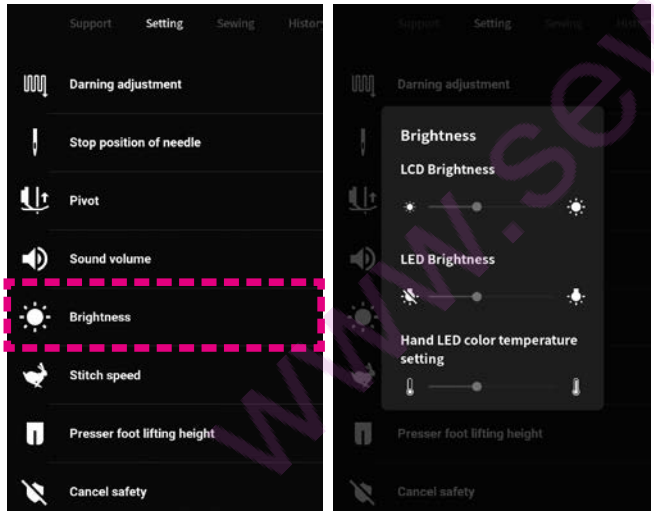

Select [Brightness] from [Setting].

Adjust the brightness by sliding the slide bar to the right or left.

The screen is dimmed.

The screen is brightened.

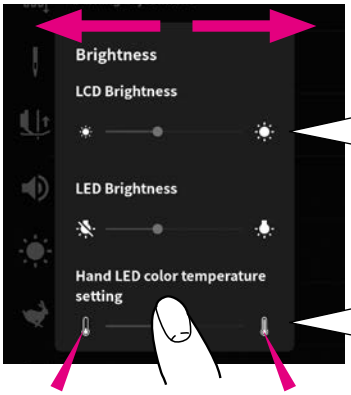

When the brightness of the screen is increased, the operation panel may become warm.

Viewability of the hand LED light is improved by changing the color temperature according to the color of material and thread.

The hand LED light color becomes bluish.

The hand LED light color becomes reddish.

When you tap the portion outside the setting screen, the screen returns to the common setting screen.

If you leave the operation panel without operating it continuously for three minutes, the operation panel screen will become dark.
The screen will resume its brightness by tapping the screen.

www.sewshop.eu

⑥ Stitch speed

Sewing speed at the start of sewing and reverse stitching can be set.
* Initial value has been factory-set to “Low speed”.

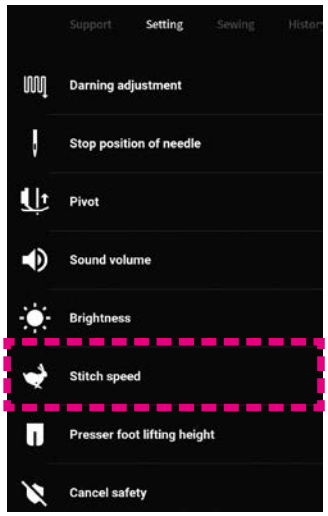

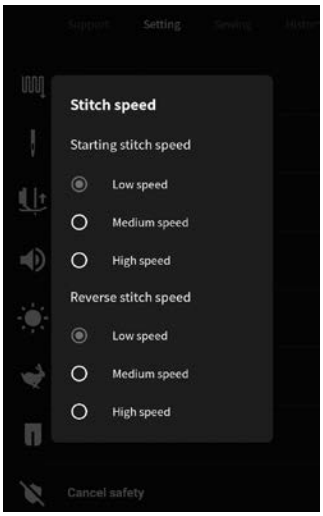

Select [Stitch speed] from [Setting].

Set the sewing speed at the start of sewing and that of the reverse stitching.

When you tap the portion outside the setting screen, the screen returns to the common setting screen.

⑦ Presser foot lifting height

The machine can be set to the presser foot lifting amount.
* Initial value has been factory-set to “6mm”.

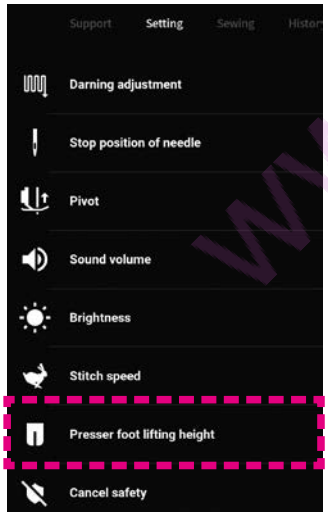

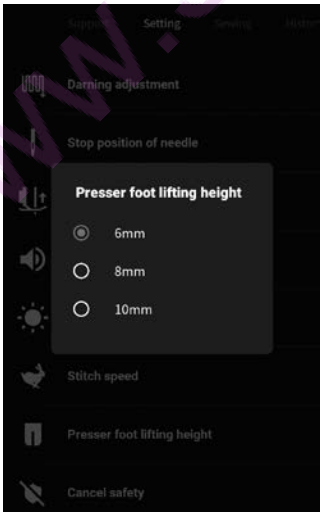

Select [Presser foot lifting height] from [Setting].

Select the presser foot lifting height from three different heights; “6 mm”, “8 mm” and “10 mm”.

When you tap the portion outside the setting screen, the screen returns to the common setting screen.

www.sewshop.eu

⑧ Cancel safety

The sewing machine can be set to allow operation even when the presser foot is lifted.

⚠ **Attention**	**Added care should be taken to check the sewing machine operation when cancelling the safety function.**

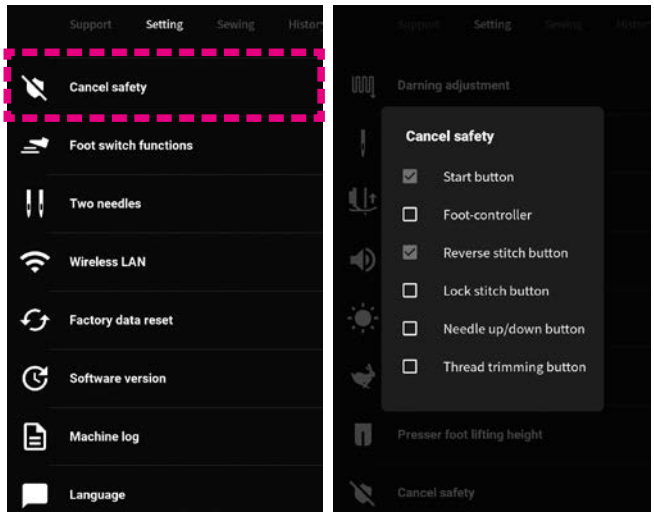

Select [Cancel safety] from [Setting].

Put a checkmark to the item safety function for which you want to cancel. Then, the safety function for the item is cancelled to allow you to operate the sewing machine even when the presser foot is lifted.

When you tap the portion outside the setting screen, the screen returns to the common setting screen.

⑨ Foot switch functions

Function can be selected for foot switch.
* Initial value has been factory-set to “Reverse stitch”.

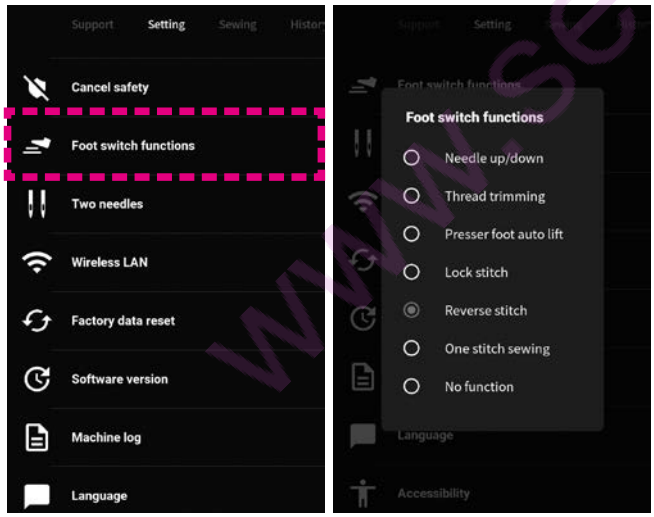

Select [Foot switch functions] from [Setting].

Select the operation to which you want to assign the foot switch function.

When you tap the portion outside the setting screen, the screen returns to the common setting screen.

* If the foot switch function is set to “reverse stitch” or “lock stitch” while automatic back tacking, thread trimming and presser foot lifting have been set, it is possible to carry out back tacking, thread trimming and presser foot lifting at the end of sewing.

www.sewshop.eu

⑩ Two needles

The sewing machine can be set to perform twin-needle stitching.

⚠ Attention	When you want to change the needle or the presser foot, be sure to turn the power OFF or place the sewing machine under the lock mode in advance.

Caution: When carrying out the twin needle stitching, it is necessary to set the twin needle before selecting a pattern.

001	004	005	006	007	008	009	010	012	014	030

031	201	502	503	508	509	510	677	835	836

Presser foot
Standard presser foot (A) Manual buttonhole presser foot (I)

Example)

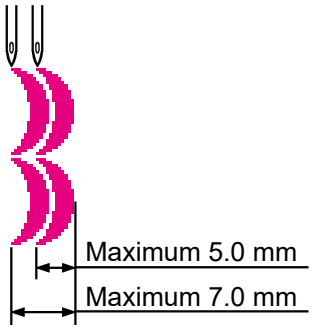

Decorative sewing patterns can be sewn beautifully using the twin needle.
When you select the twin needle setting, the stitch width setting is limited to 5 mm at the maximum.

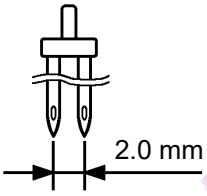

1 Change the needle to the twin needle.

Make sure to use a twin needle with size of 2.0 mm.
* The twin needle is separately available.

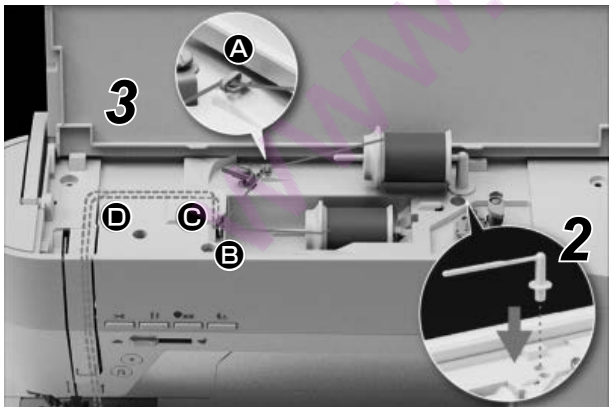

2 Place the supplementary spool pin.

3 Thread to the thread guide Ⓐ first. After that, thread paths are same up from Ⓑ to Ⓖ.

* When twin needle sewing, make sure to use thread size smaller than No. 60.

4 Do not thread Ⓗ for right-hand needle.

5 Thread to right-hand and left-hand needles separately.

* Automatic needle threader can not be used. Thread each needle manually.
* Automatic thread trimmer can not be used in case of twin needle sewing.

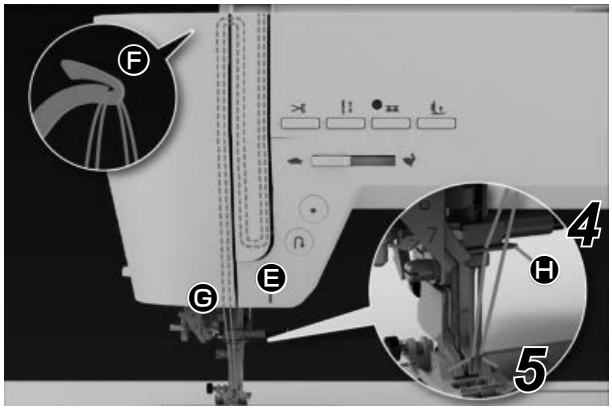

www.sewshop.eu

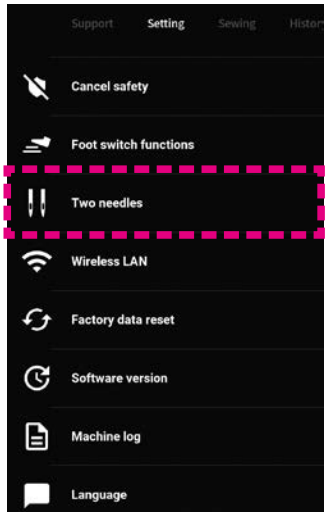

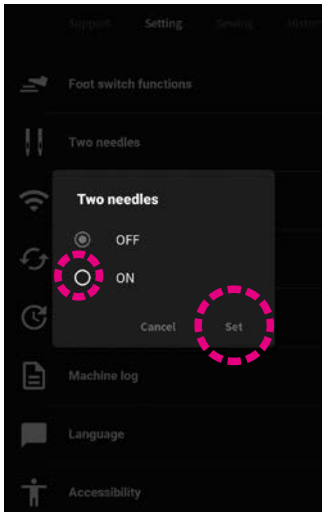

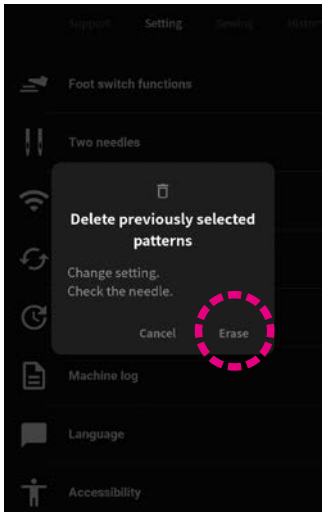

6 Setting the twin needle.

Select [Two needles] from [Setting].

Select [ON] and press [Set].

The setting is confirmed by pressing [Erase].

7 Select a pattern.

When you set the sewing machine to the twin-needle stitching, patterns that can be sewn with two needle are displayed.

⑪ Wireless LAN

It is possible to connect the sewing machine to the wireless LAN.

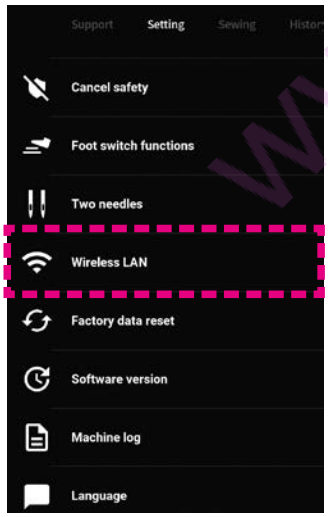

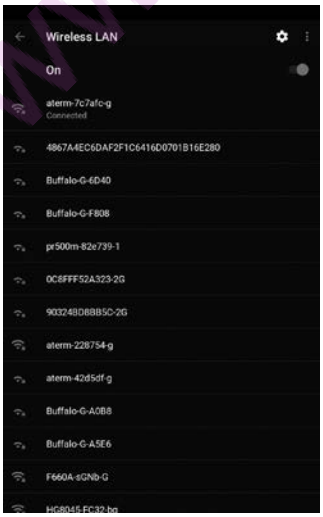

Select [Wireless LAN] from [Setting].

- **Wireless LAN setting**

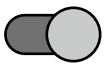
: ON

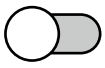
: OFF

When you set the wireless LAN to “ON”, available connection destination addresses of the wireless LAN are displayed.
Select the wireless LAN connection destination address to which you want to connect the sewing machine.

When you press the “✓” shown at the upper left of the screen, the setting is confirmed and the screen returns to the previous screen.

www.sewshop.eu

⑫ Factory data reset

Sewing machine data can be initialized.

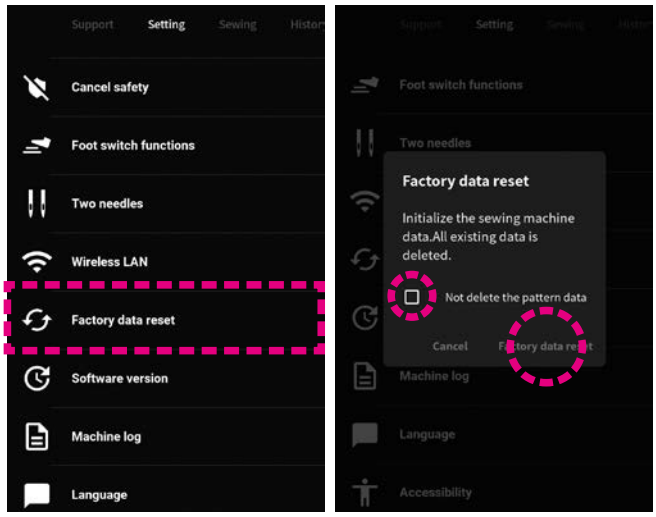

Select [Factory data reset] from [Setting].

If you do not want to delete the pattern data, place a checkmark (✓) in the box.
The data is initialized by pressing [Factory data reset].

If you press [Cancel], the initialization will be cancelled.

⑬ Software version

Software version can be checked.
*It is also possible to update the software.

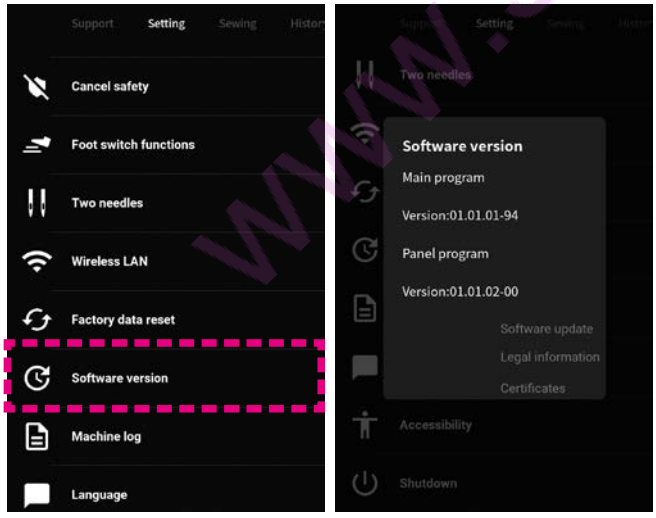

Select [Software version] from [Setting].

The software version is displayed.

When you tap the portion outside the setting screen, the screen returns to the common setting screen.

When you want to update the software, press [Software update].

www.sewshop.eu

● Updating the software

Contact your distributor if you have any question about the software.

Do not turn the power OFF while updating of the software is in progress.

< In the case of using a USB thumb drive >

Precaution to be observed in saving data on the USB thumb drive

* Save the software you have downloaded in the storage space directly under the USB thumb drive as it is. One folder that is named [prog] and one zip file that is named [HZLUX8_PANEL_********.zip] are saved.
* If any previous version of software remains on the USB thumb drive, it must be deleted before saving the newly downloaded software.
* The USB thumb drive must have a storage capacity of 1 GB or more.

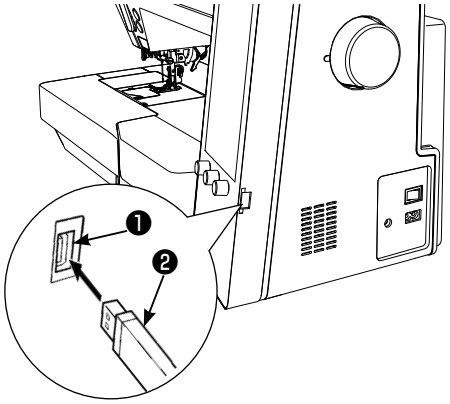

Insert USB thumb drive ❷ into USB slot ❶ .

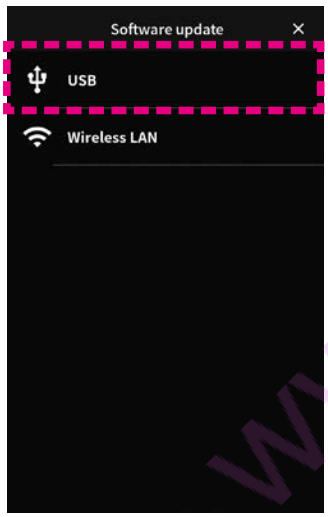

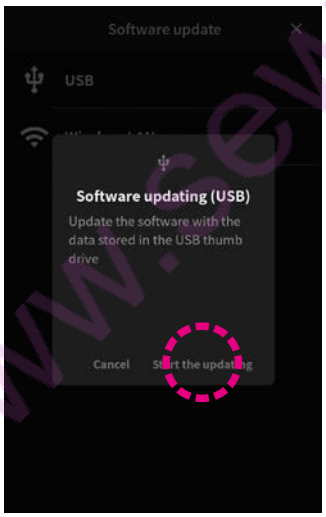

Select [USB].

Press [Start the updating].

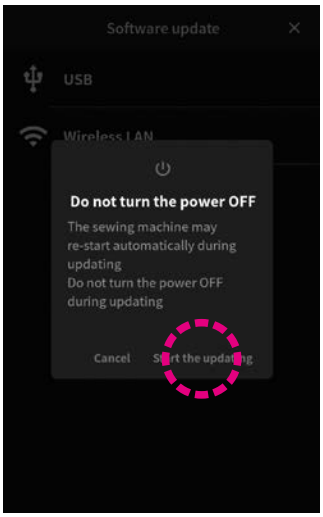

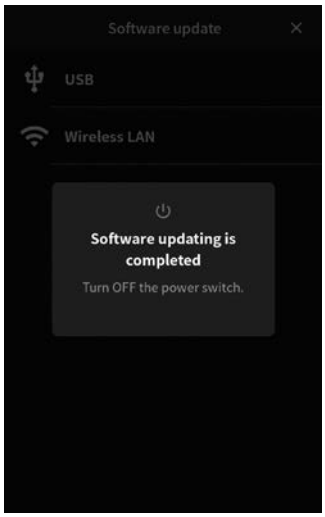

When you press [Start the updating] on the next screen, updating of the software starts.

Do not turn the power OFF while updating of the software is in progress.

When the software has been normally updated, the message [Software updating is completed] is displayed.

Remove the USB thumb drive and turn OFF the power to the sewing machine. Then, re-turn the power ON.

www.sewshop.eu

< In the case of using the wireless LAN >

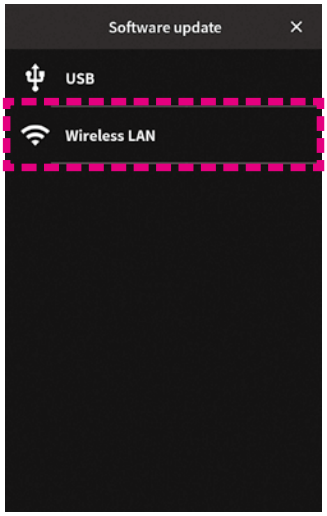

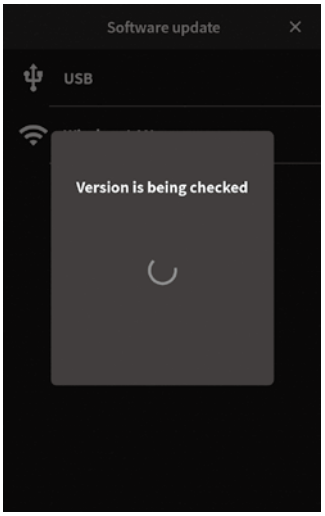

Select [Wireless LAN].

The software version is checked.

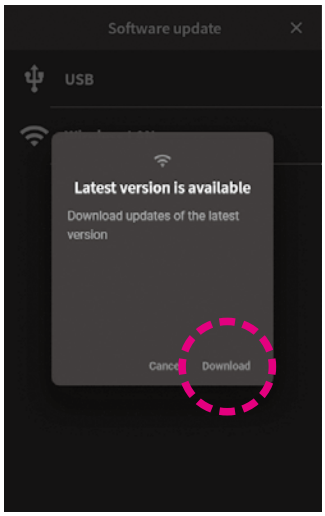

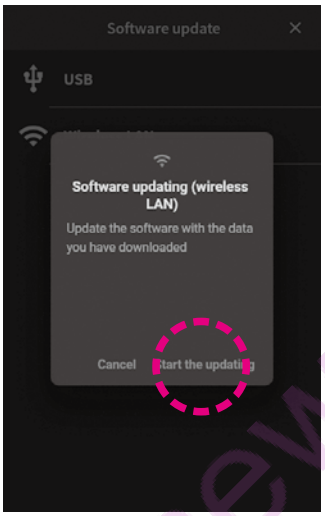

Press [Download].

When you press [Start the updating] on the next screen, updating of the software starts.

* Longer time will be required to download the software depending on your communication environment.

Do not turn the power OFF while updating of the software is in progress.

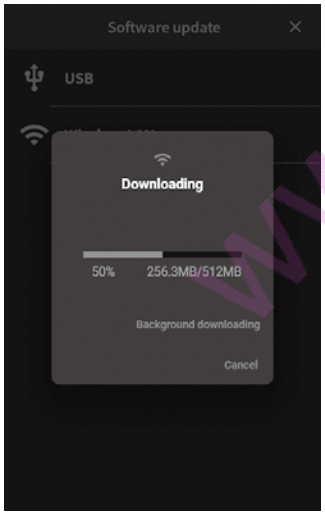

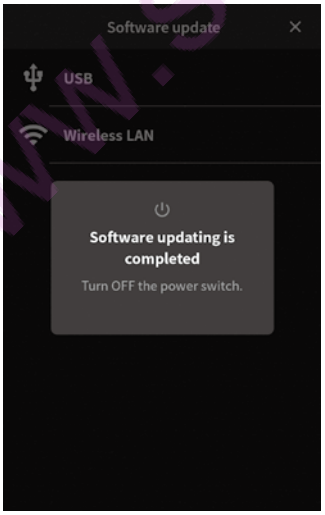

When the software has been normally updated, the message [Software updating is completed] is displayed.

Turn OFF the power to the sewing machine. Then, return it ON.

● Capturing the backup data

The settings you have made are held even after updating of the software. However, if the settings are accidentally initialized, the settings can be restored by capturing the backup data.
Refer to the next page for writing and capturing of the backup data.

www.sewshop.eu

⑭ Machine log

Sewing machine log can be checked.
* Writing and capturing of the backup data can also be carried out.

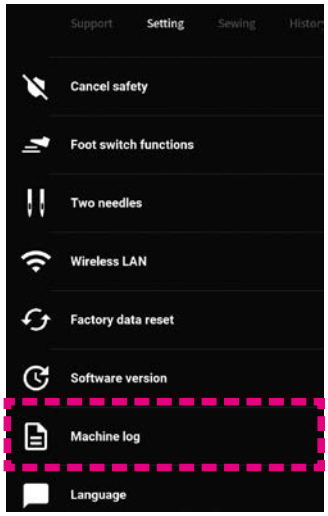

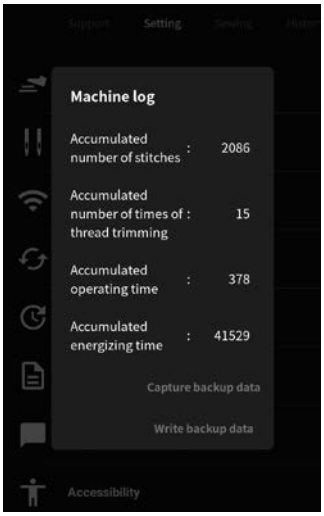

Select [Machine log] from [Setting].

The sewing machine log is displayed.

When you tap the portion outside the setting screen, the screen returns to the common setting screen.

● Writing the backup data

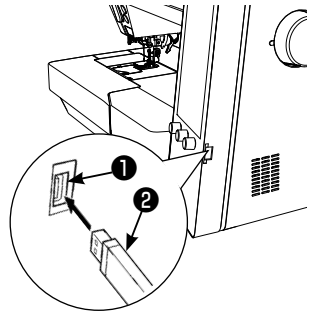

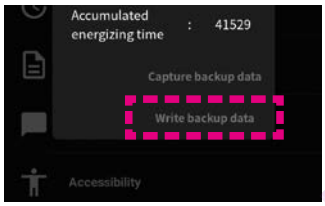

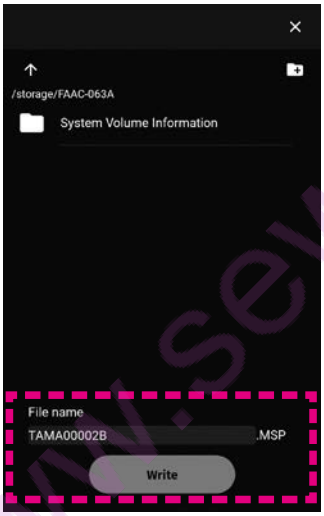

Insert USB thumb drive ❷ into USB slot ❶ .

Press [Write backup data].

Enter an arbitrary file name and press [Write].

* The initial value of the file name is the serial number of your product.
* Since this equipment is not provided with a clock function, the uploading date and time of the file you have saved may differ.

● Capturing the backup data

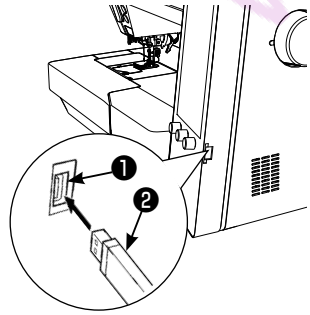

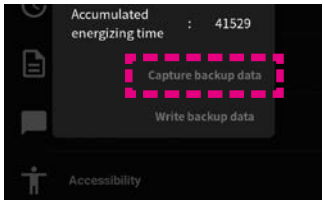

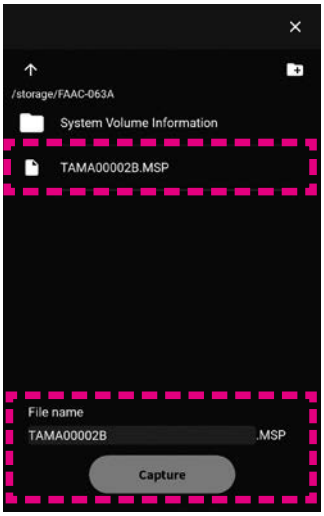

Insert USB thumb drive ❷ into USB slot ❶ .

Press [Capture backup data].

Select the file you want to capture. Press [Capture].

Do not turn the power OFF while capturing (saving) is in progress .

When the backup data has been normally captured, the message “Turn OFF the power switch” is displayed.

Turn OFF the power to the sewing machine. Then, return it ON.

www.sewshop.eu

⑮ Language

The language used for displaying messages, etc. can be changed.
* Default setting is depending on destination.

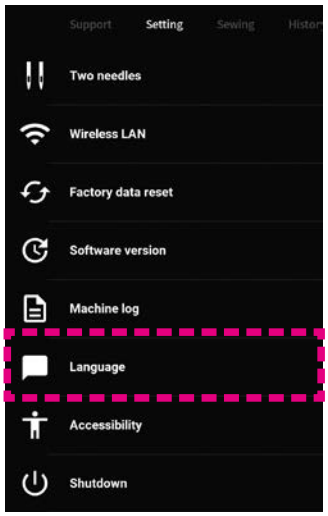

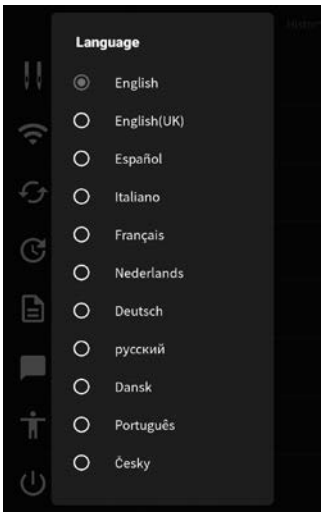

Select [Language] from [Setting].

Select the language you want to use for display.

When you tap the portion outside the setting screen, the screen returns to the common setting screen.

⑯ Accessibility (Black-and-white inversion of display)

The color of the screen can be changed.

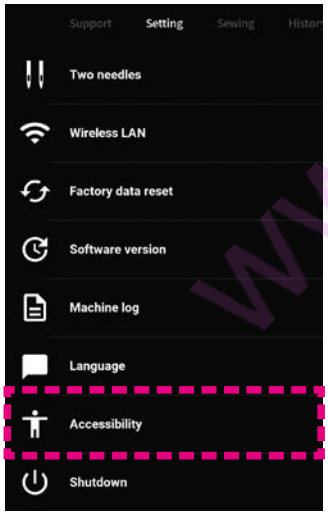

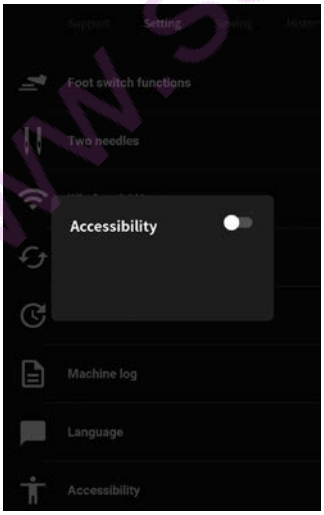

Select [Accessibility] from [Setting].

- **Setting the user accessibility**

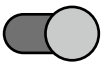
: ON

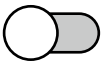
: OFF

When you tap the portion outside the setting screen, the screen returns to the common setting screen.

www.sewshop.eu

⑰ Shutdown

It is possible to turn the power OFF with the data protected.

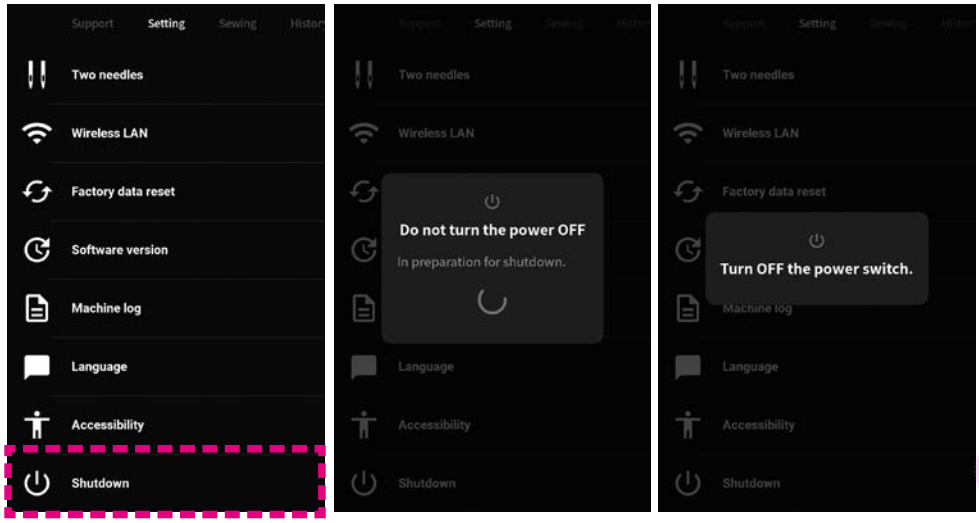

Select [Shutdown] from [Setting].

When the message “Turn OFF the power switch” is displayed on the screen, turn OFF the power switch.

www.sewshop.eu

7.3. Sewing

Refer to “5. Setting for the pattern sewing” for details.

7.4. History

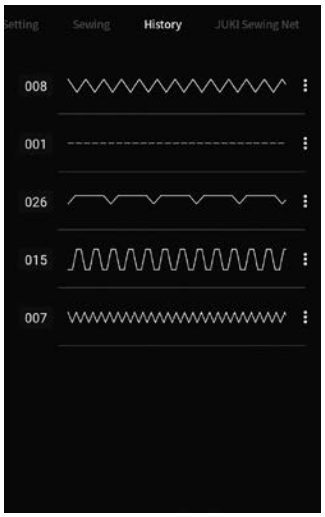

Patterns you have sewn and settings you have made are kept in history.
(Maximum number of items kept in history: 10)

* After you have sewn a pattern once, the pattern is displayed in [History] when you select a different pattern.

If you want to sew the pattern with the same settings again, select the pattern from [History].
Since the set values are also kept in history, the pattern you have sewn before and its set values can be reproduced.
The setting that is changed from the initial setting is displayed in blue on the sewing screen.

When you select pattern on the history screen, the pattern is selected and the sewing screen is displayed.
When you press ⋮, the menu is displayed.
Deletion of the history and writing of data in a USB thumb drive can be carried out using the menu.

7.5. JUKI Sewing Net

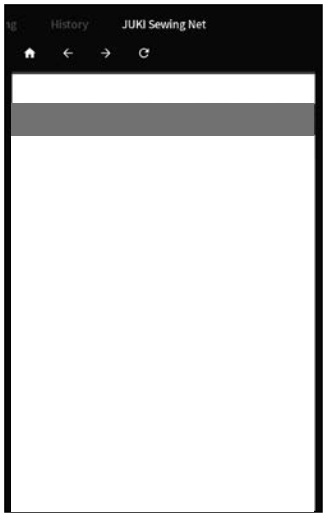

In the case the sewing machine is connected to the wireless LAN, JUKI website will be displayed.

www.sewshop.eu

8. Message catalog

* The message is erased by carrying out the relevant operation indicated by the message or pressing the button on the screen.

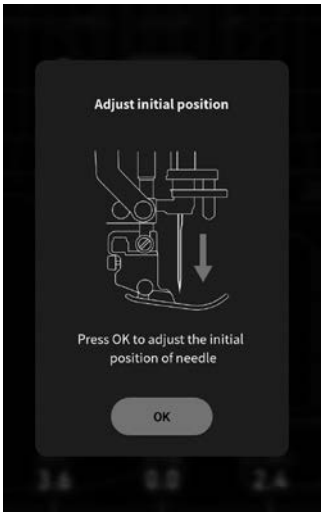	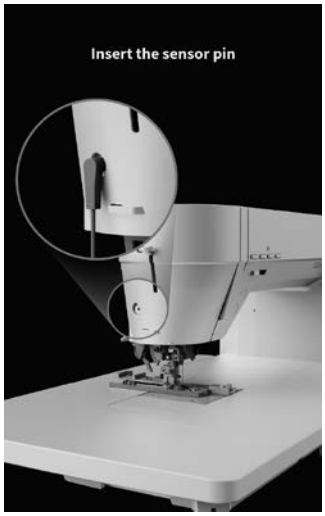	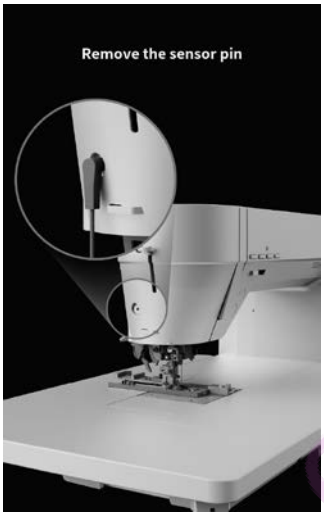	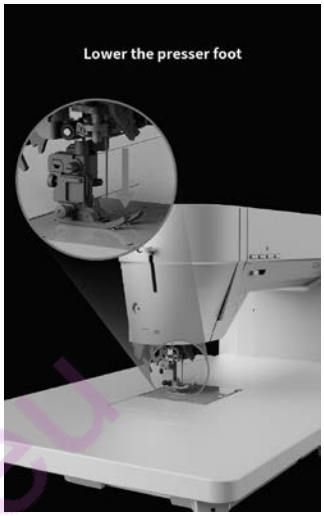
When the sewing machine starts up, or when the needle moves. The needle is moved by pressing [OK]. Then, the initial screen is displayed.	When one of the buttonhole stitches is selected and the buttonhole sensor pin is not connected, the machine starts to sew.	When a stitch pattern other than buttonholes is selected but the buttonhole sensor pin is connected, the machine starts to sew.	This pictograph is displayed when the safety device is activated while the presser foot goes up.
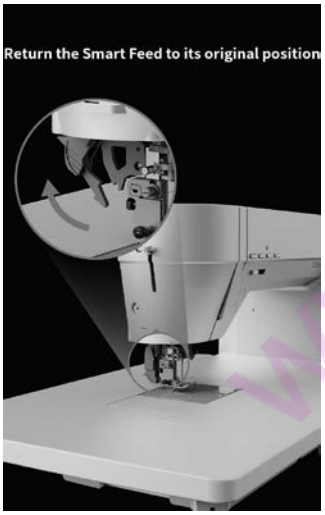	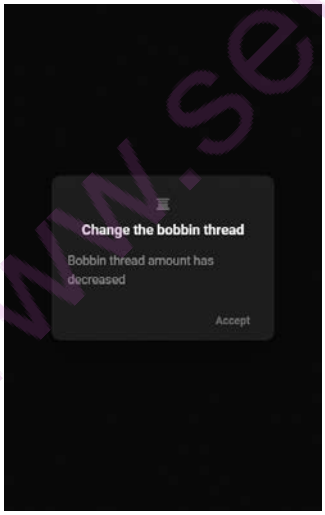	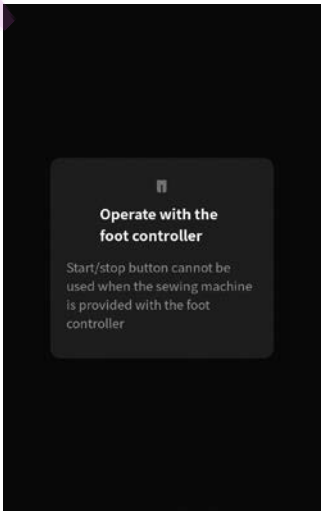	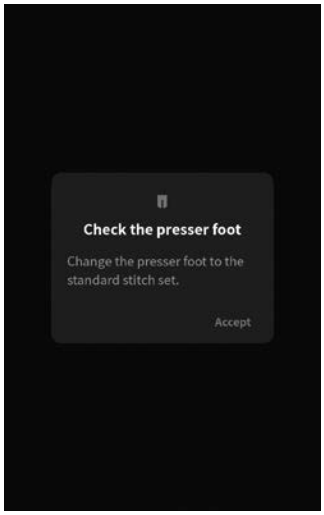
This pictograph is displayed when “JUKI Smart Feed” detection sensor detects while the pattern which cannot be sewn with “JUKI Smart Feed”.	When the bobbin thread amount has reduced. The sewing can be continued 30 stitches in this state.	When you have tried to start the sewing machine by pressing the start/stop button while the foot controller is connected to the sewing machine.	When changing from the stitch type from the 1-needle straight stitch to the standard stitch.

www.sewshop.eu

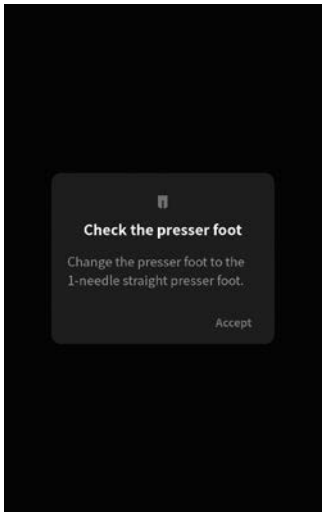	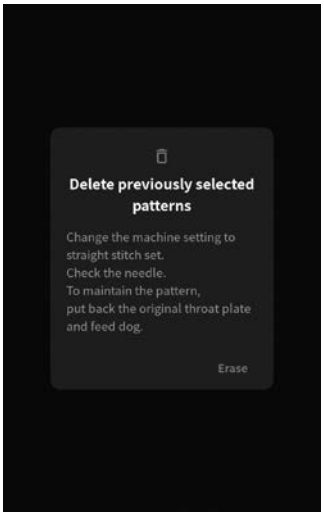	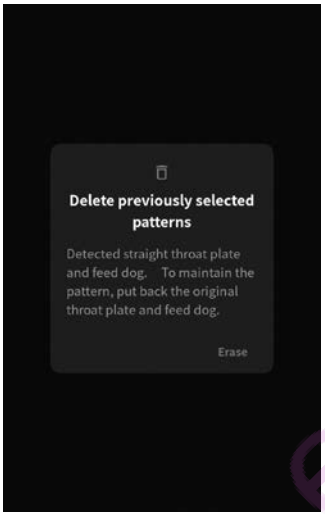	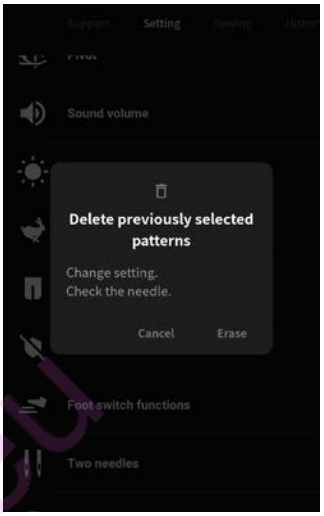
When changing the stitch type from the standard stitch to the 1-needle straight stitch.	In the case the straight throat plate is installed though the stitch type is set to the twin-needle stitch with the standard throat plate.	In the case the straight throat plate is installed though the stitch type is set to the 1-needle stitch with the standard throat plate.	When changing the twin needle setting.
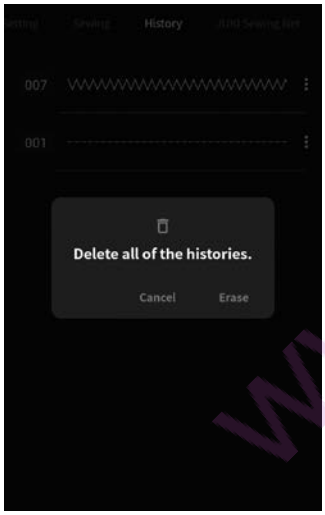	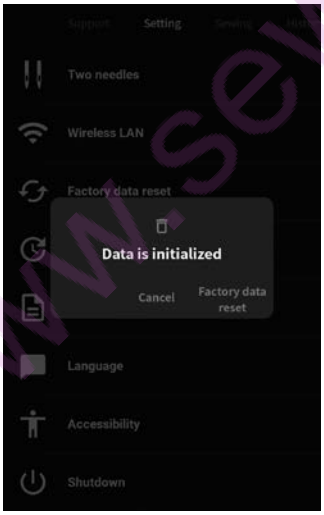	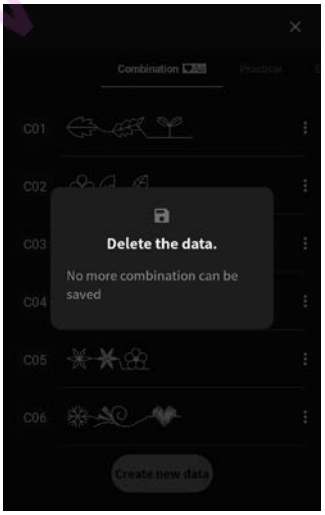	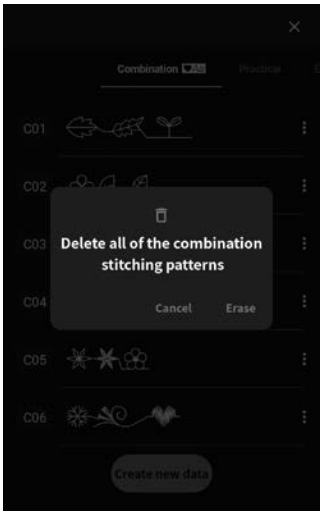
When [Delete all] is selected on the history page.	When this sewing machine data is initialized.	In the case the combination of stitch patterns cannot be saved any more.	When [Delete all] is selected on the combination page.

www.sewshop.eu

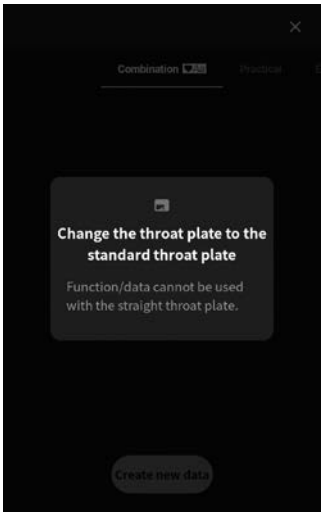	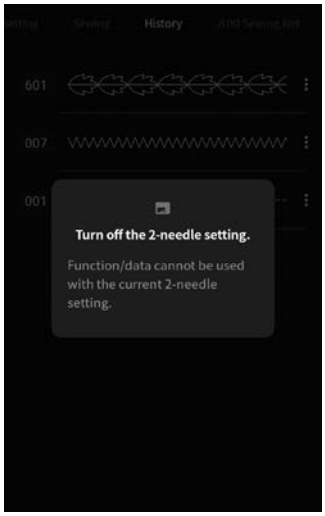	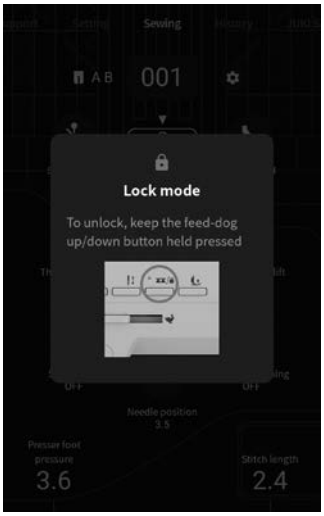	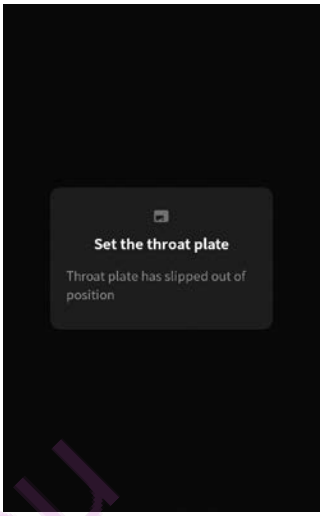
In the case of the lock mode that cannot be used when the stitch type is set to the straight stitch. When a pattern or function is selected.	When a pattern or function that cannot be used for the twin needle type is select-ed.	In the state of the lock mode.	When the throat plate has come off. In the state that the throat plate has been detached.
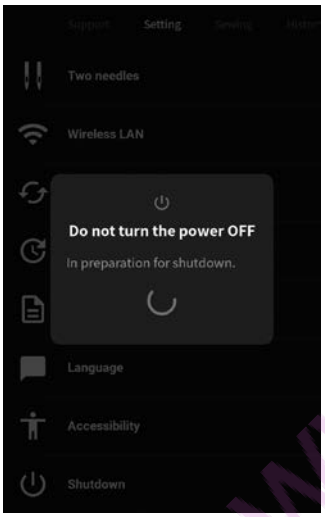	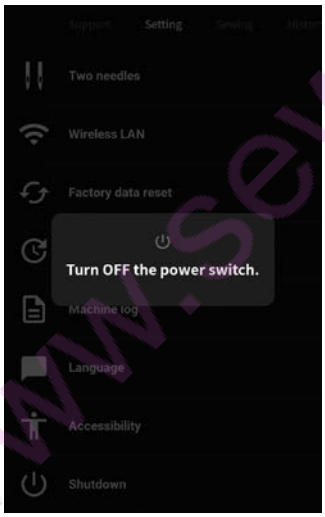	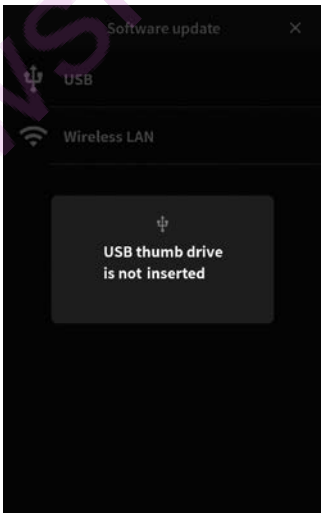	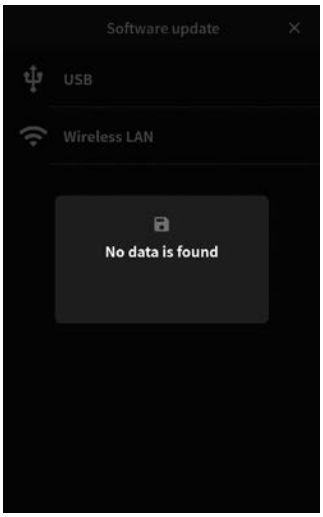
While the preparation for shutdown of the sewing ma-chine with the data saved is in progress.	When the preparation for shutdown of the sewing machine with the data has been completed.	No USB thumb drive is inserted into the USB slot when you try to use the function of accessing the USB thumb drive.	Data you need is not pres-ent in the USB thumb drive.

www.sewshop.eu

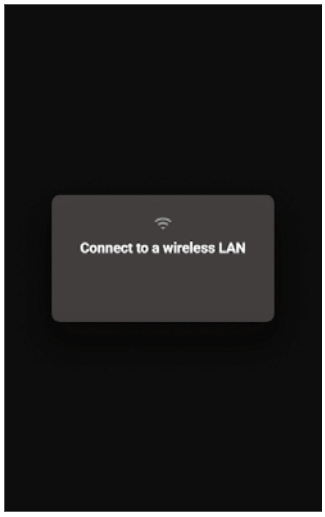	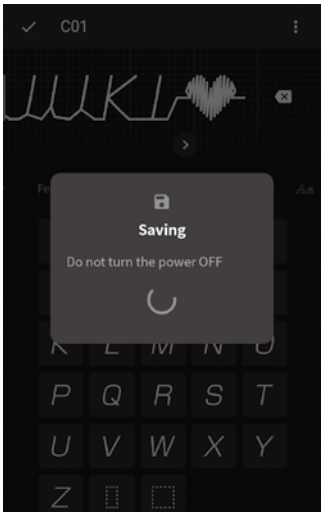	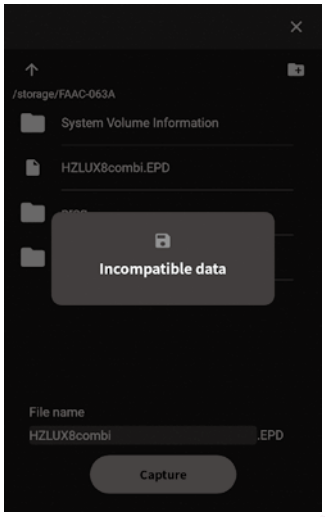	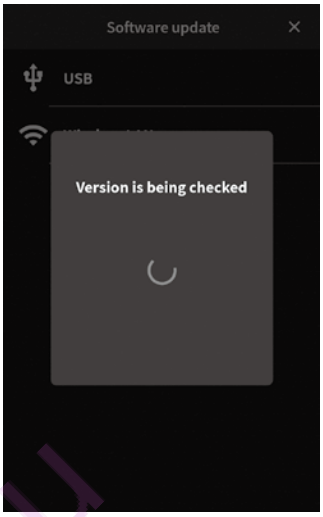
The sewing machine is not connected to the wireless LAN when you try to use the function that requires connection to the wireless LAN.	In the case saving of data is in progress.	The data you have selected cannot be used due to the lack of interchangeability.	While the current software version is being confirmed.
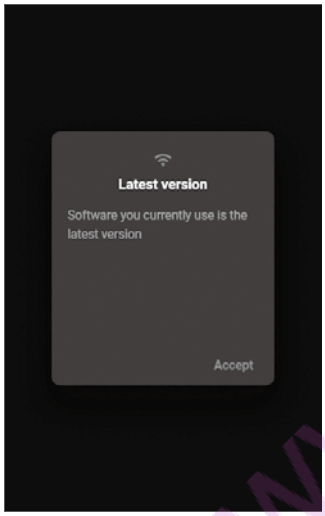	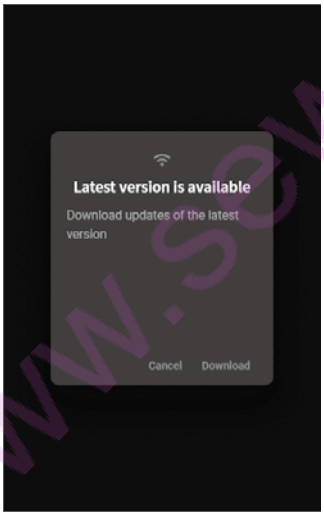	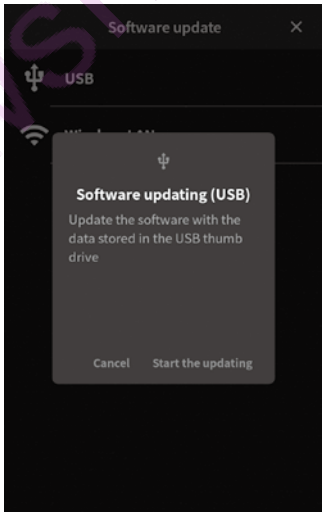	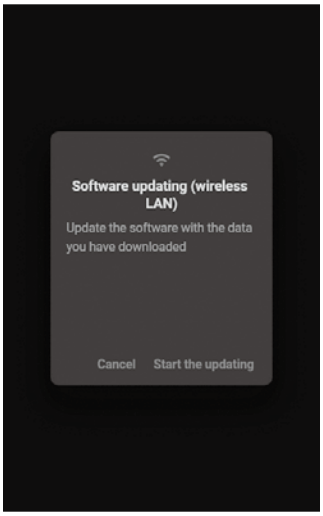
In the case you have confirmed the software version to find it is the latest version.	In the case you have confirmed the software version to find the later version exists.	In the case of updating the software using the data stored in the USB thumb drive.	In the case of updating the software using the data that is downloaded via the wireless LAN.

www.sewshop.eu

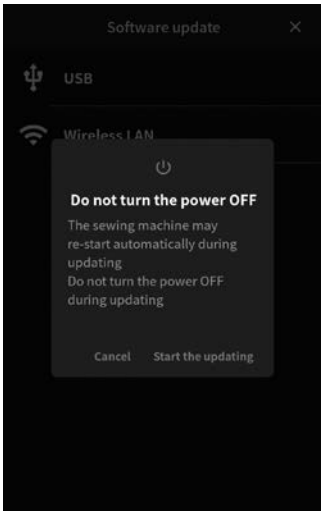	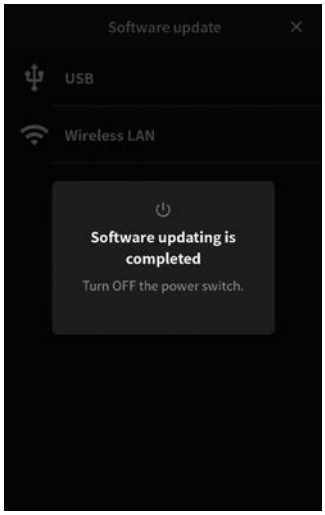	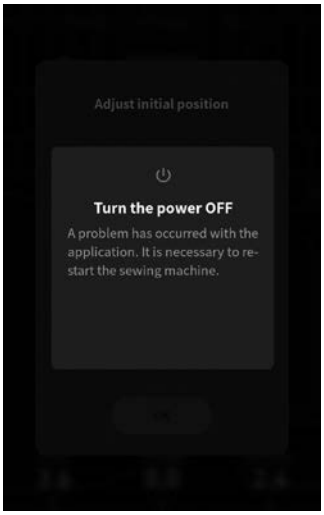
When starting updating of the software.	When updating of the software is completed.	In the case some problem has occurred with the application and re-starting of the sewing machine is required to reset the problem.

www.sewshop.eu

9. Machine Maintenance

When lint and/or dirt has built up, it may cause machine failures. Therefore, clean the machine frequently.

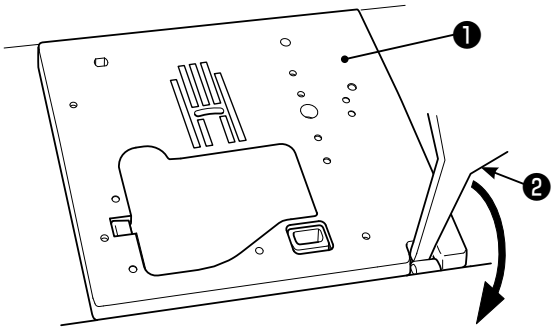

⚠ Turn off the machine or leave the Machine in Lock Mode

1 Remove needle and presser foot. Remove the throat plate.

Push the exclusive screw-driver ❷ into the groove in front of the throat plate ❶ and press the screw-driver downward to remove the throat plate.

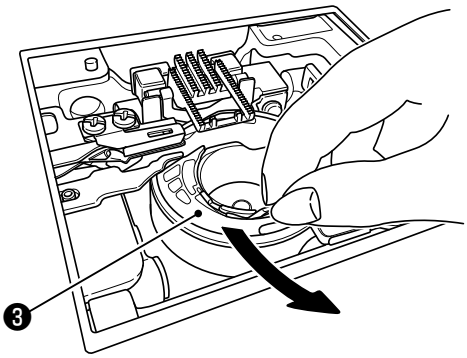

2 Remove the bobbin case holder ❸ .

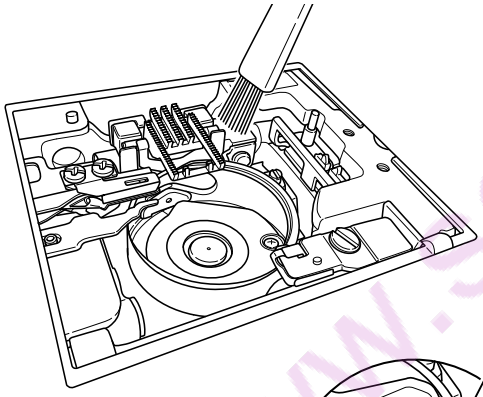

3 Remove lint and dirt.

Remove lint and dirt around the feed dog and bobbin case holder with the cleaning brush.

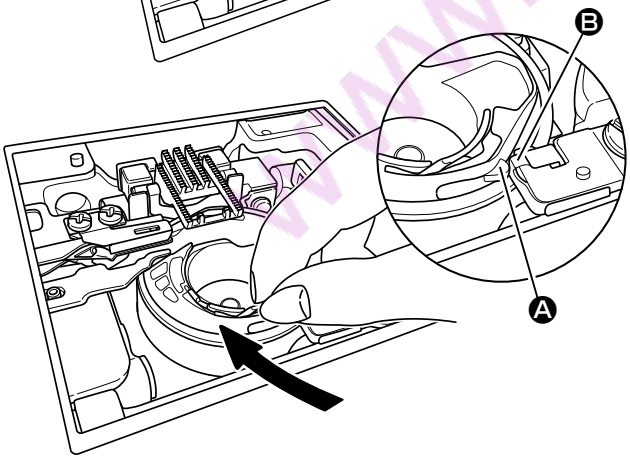

4 Install the bobbin case holder.

Install the bobbin case holder so that points Ⓐ and Ⓑ touch each other.

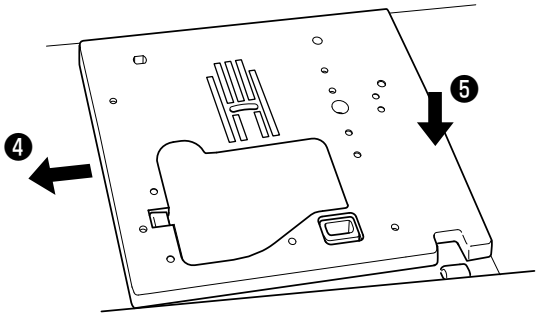

5 Fit the throat plate in position.

Place the area (❹) first and then push center to right hand part of the throat plate to assemble (❺) .

www.sewshop.eu

10. Introduction of optional accessory parts

Make your home sewing more pleasant!
Please purchase the following items in the shop where you buy our products.

● Rolled hemming presser foot

Fabric edge is hemmed while rolling it under. Used for bottom of shirts, blouses, frills and the edge of handkerchiefs.

● Button attaching presser foot

This presser foot is used to attach buttons on garments.

● Pearl attaching presser foot

With this presser foot it is possible to attach pearls, beads and thick cord.

● Presser foot with guide

As the presser foot has markings, which show 2 mm distance, these marking will serve as a guide.

● Binder presser foot

It is possible to attach tapes such as bias tape into four folds.

● Twin needle

By using two needles beautiful decorative stitches can be sewn. (Twin needle with size: 2.0 mm)

requires the adapter shank.

● Cording and Embroidery presser foot

It is used in free motion quilting and a cord can be sewn together with this presser foot.

● Hemming presser foot for zigzag

Fabric edge is hemmed by zigzag while rolling it under. Used for bottom of shirts, blouses, frills and the edge of handkerchiefs.

● Appliqué presser foot

Since the front and back of the presser foot is short, it is easy to move the materials at curve points. Also fabrics can be seen easily because it is transparent.

● Cording presser foot

It is possible to attach 1 - 3 cords by three-point zigzag or decorative stitch.

● Invisible zipper foot

As a seam does not appear on the right side of the fabric, an opening can be finished with fabric edges neatly butted.

● Smooth presser foot

This presser foot is used for non-slippery materials like vinyl and satin stitches.

● Adapter shank

The presser foot joint is necessary when the separately-available presser foot that is to be attached after removing the presser foot holder.

● Quilt presser foot (open type)

It is used in free motion sewing. As the front portion is open, it is easy to see the needle entry point.

● Quilt presser foot (zigzag type)

It is used for free-motion quilting. Zigzag stitch is also possible with this presser foot.

www.sewshop.eu

● Magnifier

Creates additional magnification to the stitch area.
When you do not use the magnifier during sewing, it can be moved to the position where it does not interfere with the operator's hand.

● Spool holder

A spool on which thread is thickly wound can be set. This spool is useful when sewing many stitches at a time such as quilting.
The thread stand comes in the different types; i.e., 1-piece type and 2-pieces type.

● LED pointer

Crisscross light guide is displayed by the vertical and horizontal light beams by attaching the LED pointer to the separately-available holder. This light guide is helpful when you align the sewing starting positions and stitch position of the pattern during sewing.

www.sewshop.eu

11. Performance check list

If sewing difficulties occur, make sure the instructions are correctly followed.
If a problem still exists, the reminders below may help solve it.

Case	Cause (Reason)	Solution	Reference page
● The machine stops sewing suddenly. (This is in case you can turn hand wheel by hand.)	● The machine sews at slow speed continuously. (The machine has a mechanism to automatically cut off the power to prevent the motor from overheating.)	● Turn off the power and wait for a while (about 10 minutes). The safety mechanism will be reset and the machine will return to normal.	3
● The machine will not work even when start/stop button is pressed. (This is in case sewing light is still on.)	● The needle hits presser foot due to an installation of incorrect presser foot. ● The needle fell into the hook area and tried to start.	● Use the appropriate presser foot to the selected stitch pattern. ● Remove the needle from the hook area.	- -
● Needle breaks.	● Thick material is sewn with a thin needle. ● The needle is not inserted fully. ● The needle setscrew is not securely tightened. ● The wrong presser foot is used for a certain pattern. ● Needle is bent.	● Check the combination of fabric, thread and needle. ● Check the installation of needle. ● Securely tighten the needle setscrew. ● Check the combination of stitch pattern and presser foot to be used. ● Change needle.	26 25 25 - 25
● Loud noise and/ or keen noise while sewing.	● Lint or dust has accumulated in the feed dog. ● Lint or dust has accumulated in the hook.	● Clean the feed dog area. ● Clean the hook area.	123 123
● Machine fails to feed fabrics.	● The stitch length is set at “0”. ● Soft fabrics such as towels are being sewn. ● The machine is set in drop feed condition. ● The height of the micro-lifter is too high.	● When the stitch pattern is reselected, the machine goes back to the default setting. ● Set the stitch length to 3 to 5. ● Lift the feed dog. ● Adjust the height of the micro-lifter.	42 - 9 38
● Needle can not be threaded. (This is in case needle threader will not turn.) ● The hook of needle threader does not go through the needle eye.	● The needle is not in the up position. (When needle is not in the up position, needle threader will not turn. This is to avoid damages to the hook.) ● The needle is not inserted fully.	● Rotate the hand wheel and lift the needle upwards. ● Check the installation of the needle.	31 25

www.sewshop.eu

Case	Cause (Reason)	Solution	Reference page
● The needle threading lever will not return to the original position and the machine can not turn properly. (This is in case the hook of needle threader remains in the needles eye.)	● Hand wheel is turned by mistake while the needle threading lever is in down position. (in the process of threading to the needle.)	● Turn hand wheel slightly away from you. (to the opposite side when sewing).	-
● The machine will not start even when start/stop button is pressed.	● The foot controller is plugged in.	● Start/stop button can function when foot controller is removed.	16
● Thread breaks. ● Stitch is skipped.	● The machine is incorrectly threaded. ● There is knot or knurl on the thread. ● Thread tension is not adjusted appropriately. ● The needle is bent or the tip of needle is broken. ● The needle is installed incorrectly. ● Threading of bobbin thread is not correct. ● The bobbin can not turn smoothly inside the hook holder. ● The needle size does not match the thread. ● Thread take-up is not threaded.	● Rethread the machine correctly. ● Remove knot or knurl from thread. ● Adjust thread tension manually according to fabrics and thread to be used. ● Change needle. ● Install needle correctly. ● Check the correct way of setting bobbin thread. ● Check the correct way of winding bobbin thread. ● Check the combination of thread and needle. ● Rethread the machine correctly.	32 - 36 25 25 29 - 26 33
● Thread tension is not good.	● The needle thread is threaded in correctly. ● The bobbin thread is threaded incorrectly. ● The direction of spool cap doesn't match the spool.	● Rethread the machine correctly. ● Check the correct way of setting bobbin thread. ● Attach the spool cap in a correct direction.	32 29 32
● Puckering occurs.	● The stitch length is too large on lightweight fabrics. ● The needle tip is broken.	● Make the stitch length smaller (shorter). ● Change needle.	40 25
● The needle thread is caught in the bobbin winding thread guide during sewing.	● The needle thread may be caught in the bobbin winding thread guide depending on the size of the spool cap.	● Put the separately available net on the spool cap to prevent this problem.	-
● ⌛ sign is shown on the LCD display.	● Safety mechanism works when machine stops due to motor lock. Or, when the voltage fault has occurred.	● The safety mechanism will be reset in a short while and the machine will return to normal. (At this time, the start/stop button will not light up.)	-

www.sewshop.eu

12. List of stitch patterns

: Types of patterns that can be selected under the single mode

: Types of patterns that can be selected under the combination mode

: Patterns that can be sewn with the “JUKI Smart Feed”

Practical

001 002 003 004 005

006 007 008 009 010

011 012 013 014 015

016 017 018 019 020

021 022 023 024 025

026 027 028 029 030

031 032 033 034 035

036 037 038 039 040

041 042 043 044

Buttonhole

101 102 103 104 105

106 107 108 109 110

111 112 113 114 115

116 117 118 119 120

121 122

Appliqué

Appliqué

201 202 203 204 205

206 207 208 209 210

211 212 213 214 215

216 217 218 219 220

221 222 223 224 225

226 227 228 229 230

231 232 233 234 235

236 237 238 239 240

Tapering

301 302 303 304 305

306

Quilt line

Quilt line

401 402 403 404 405

406 407 408 409 410

411 412 413 414 415

416 417 418 419 420

421 422

Scallop

Scallop

501 502 503 504 505

506 507 508 509 510

511 512

www.sewshop.eu

* The listing can be found inside the top cover of the sewing machine.

One-point

One-point

601 602 603 604 605 646 647 648 649 650

606 607 608 609 610 651 652 653 654 655

611 612 613 614 615 656 657 658 659 660

616 617 618 619 620 661 662 663 664 665

621 622 623 624 625 666 667 668 669 670

626 627 628 629 630 671 672 673 674 675

631 632 633 634 635 676 677 678 679 680

636 637 638 639 640 681 682 683 684

641 642 643 644 645

Decorative

Decorative

701 702 703 704 705 746 747 748 749 750

706 707 708 709 710 751 752 753 754 755

711 712 713 714 715 756 757 758 759 760

716 717 718 719 720 761 762 763 764 765

721 722 723 724 725 766 767 768 769 770

726 727 728 729 730 771 772 773 774 775

731 732 733 734 735 776 777 778 779 780

736 737 738 739 740 781 782 783 784 785

741 742 743 744 745 786

Vintage

Vintage

801 802 803 804 805

806 807 808 809 810

811 812 813 814 815

816 817 818 819 820

821 822 823 824 825

826 827 828 829 830

831 832 833 834 835

836 837

Feather / Lace

Feather / Lace

901 902 903 904 905

906 907 908 909 910

911 912 913 914 915

Letters / numbers / signs

A B C D E　F G H I J　K L M N O　P Q R S T　U V W X Y

a b c d e　f g h i j　k l m n o　p q r s t　u v w x y

1 2 3 4 5　6 7 8 9 0

Ä Å Æ à ä　å è é ê ë　Ç œ ç ì Ñ　ñ Ö Ø ò ö　ø Ü ù ü

. , : ; ?

あいうえお　かきくけこ　さしすせそ　アイウエオ　カキクケコ　サシスセソ　一二三四五　六七八九十　幼稚園保育　小学校年組　一～・！？

www.sewshop.eu

■ Specification list

Item	Specification
Body size	602 (W) × 310 (H) × 264 (D) mm
Weight	14.9 KGS
Volts	220 V - 240 V ∿ , 120V ∿ (USA/Canada only)
Watts	90 W
Hertz	50/60 Hz
Foot control model No.	JC-002
Frequency Range	2.400 GHz - 2.4835 GHz
Maxium Output Power	7.5 dBm

www.sewshop.eu

JUKI CORPORATION
2-11-1, TSURUMAKI, TAMA-SHI,
TOKYO, 206-8551, JAPAN
PHONE : (81)42-357-2341
FAX : (81)42-357-2379

Copyright © 2020 JUKI CORPORATION
All rights reserved throughout the world.

40243705

000920