NECCHI

Instruction Manual

K408A/K417A/K432A

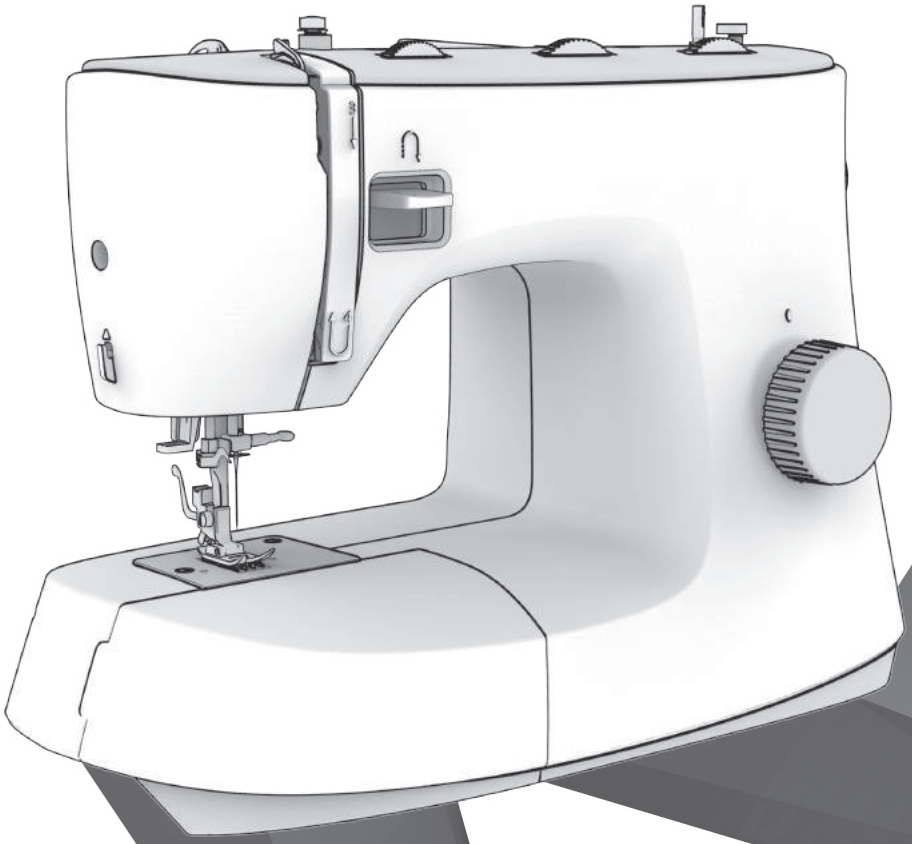

Important safety instructions

When using an electrical appliance, basic safety should always be followed, including the following:

Read all instructions before using this sewing machine.

DANGER - To reduce the risk of electric shock:

1. An appliance should never be left unattended when plugged in.
2. Always unplug this appliance from the electric outlet immediately after using and before cleaning.

WARNING - To reduce the risk of burns, fire, electric shock, or injury to persons:

1. Read the instruction carefully before you use the machine
2. Keep the instructions at a suitable place close to the machine and hand it over if you give the machine to a third party.
3. Use the machine only in dry locations.
4. Never leave the machine unattended with children or elderly people due to they may not be able to estimate the risk.
5. This appliance can be used by children aged from 8 years and above and persons with reduced physical, sensory or mental capabilities or lack of experience and knowledge if they have been given supervision or instruction concerning use of the appliance in a safe way and understand the hazards involved.
6. Children shall not play with the appliance.
7. Cleaning and user maintenance shall not be made by children without supervision.
8. Always switch off the machine if you carry out preparation for work (change the needle, feed the yarn through the machine, change the footer, etc.).
9. Always unplug the machine if you leave it unattended, to avoid injury by expediently switch on the machine.
10. Always unplug the machine if you changing the lamp or carry out maintenance (oiling, cleaning).
11. Don't use the machine if it’s wet or in humid environment.
12. Never pull at the cord, always unplug the machine by gripping the plug.
13. If the LED lamp is damaged or broken, it must be replaced by the manufacturer or its service agent or a similarly qualified person, in order to avoid a hazard.

14. Never place anything on the pedal.
15. Never use the machine if the air vents are blocked, keep the air vents of the machine and the foot pedal free from dust, fusel and leftovers.
16. The machine must only be used with designated foot controller, in order to avoid a hazard. If the foot controller is damaged or broken, it must be replaced by the manufacturer or its service agent or a similarly qualified person.
17. The power cord of the foot controller can not be replaced. If the power cord is damaged the foot controller must be disposed
18. The sound pressure level at normal operation is smaller than 75dB(A).
19. Do not dispose of electrical appliances as unsorted municipal waste, use separate collection facilities.
20. Contact your local government for information regarding the collection systems available.
21. If electrical appliances are disposed of in landfills or dumps, hazardous substances can leak into the groundwater and get into the food chain, damaging your health and well-being.
22. When replacing old appliances with new ones, the retailer is legally obligated to take back your old appliance for disposal at least for free of charge.
23. The appliance is not to be used by persons (including children) with reduced physical, sensory or mental capabilities, or lack of experience and knowledge, unless they have been given supervision or instruction. (For outside Europe)
24. Children being supervised not to play with the appliance. (For outside Europe)

SAVE THESE INSTRUCTIONS

This sewing machine is intended for household use only.

Be sure to use the sewing machine in the temperature range from 5ºC to 40ºC. If the temperature is excessively low, the machine can fail to operate normally.

Contents

Machine Introduction 1

Principal parts of the machine **2**
Accessories **3**
Standard 3
Optional 3
Connecting machine to power source **4**
Polarized plug information 4
Foot control 4

Machine Setup 5

Sewing table **6**
Free arm 6
Two-step presser foot lifter **7**
Winding the bobbin **8**
Inserting the bobbin **10**
Threading the upper thread **11**
Using the needle threader (depends on models) **13**
Bringing up the bobbin thread **14**
Replacing the needle **15**
Matching needle/fabric/thread **16**
Changing the presser foot **17**
Remove the presser foot 17
Attach the presser foot 17
Remove and insert the presser foot holder 17
Insert the edge/quilting guide 17
Thread tension **18**

Sewing Basics 19

How to choose your pattern **20**
Straight stitch **21**
Changing the needle position 21
Zigzag stitch **22**
Adjusting the stitch width 22
Adjusting the stitch length 22
Starting to sew **23**
Useful skills **25**
Reverse sewing 25
Sewing curves 25
Sewing corners 26
Sewing stretch fabrics 26
Sewing thin fabrics 26
Sewing heavy fabric 26

Utility Stitches 27

Stretch stitch **28**
Straight stretch stitch 28
Zigzag stretch stitch 28
Sewing stretch fabrics and elastic tape **29**
Overcasting stitch **30**

Blind Hem **31**
4-Step Buttonhole stitch **32**
Making a buttonhole on stretch fabrics 33
Button sewing **34**
Zipper insertion **35**
Inserting a centered zipper 35
Inserting a side zipper 36
Gathering **37**
Smocking **38**
Free motion darning, embroidery and monogramming **39**
Preparation for embroidering and monogramming 39
Darning 40
Embroidery 40
Monogramming 40
Quilting **41**
Using the edge/quilting guide 41
Joining the pieces of the fabric 41
Patchwork stitching 42
Applique **43**
Fagoting **43**
Scallop stitch **44**
Scallop edging 44
Shell tuck stitching 44

Maintenance and Trouble shooting 45

Maintenance **46**
Clean the machine surface 46
Remove the needle plate 46
Clean the feed dog 46
Clean and lubricate the hook 47
Trouble shooting guide **48**

Machine Introduction

Principal parts of the machine

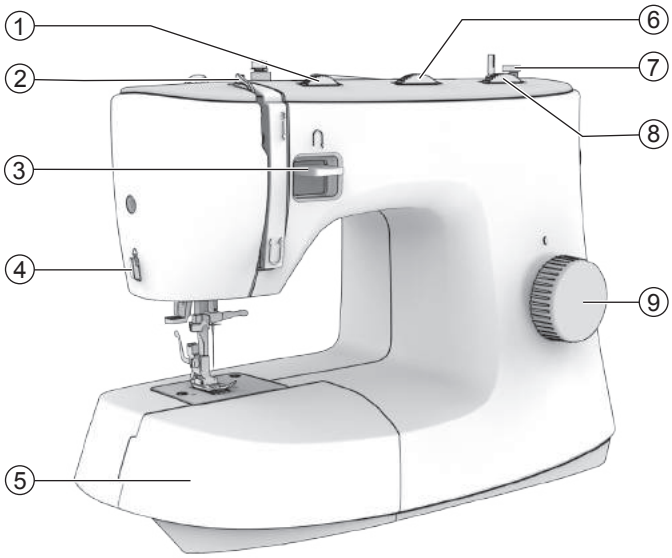

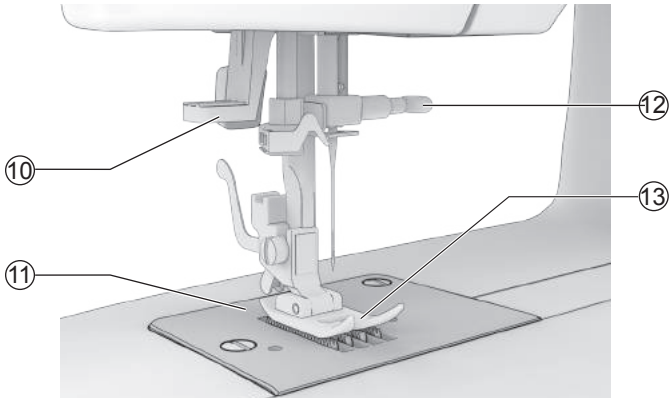

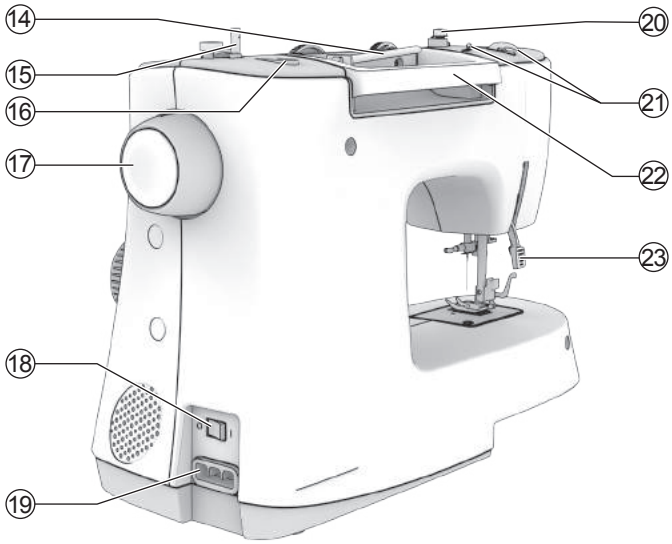

1. Tension dial (page 18)
2. Take-up lever
3. Reverse sewing lever (page 25)
4. Thread cutter (page 24)
5. Sewing table and accessory box (page 6)
6. Stitch width dial (depends on models) (page 20)
7. Bobbin winder stopper (page 8)
8. Stitch lenght dial (page 20)
9. Pattern selector dial (page 20)
10. Needle threader (depends on models) (page 13)
11. Needle plate (page 47)
12. Needle clamp screw (page 15)
13. Presser foot (page 17)
14. Horizontal spool pin (page 11)
15. Bobbin winder spindle (page 8)
16. Second spool pin hole
17. Handwheel
18. Power switch (page 4)
19. Power cord (page 4)
20. Bobbin thread guide (page 8)
21. Upper thread guide
22. Handle
23. Presser foot lifter (page 7)

Accessories

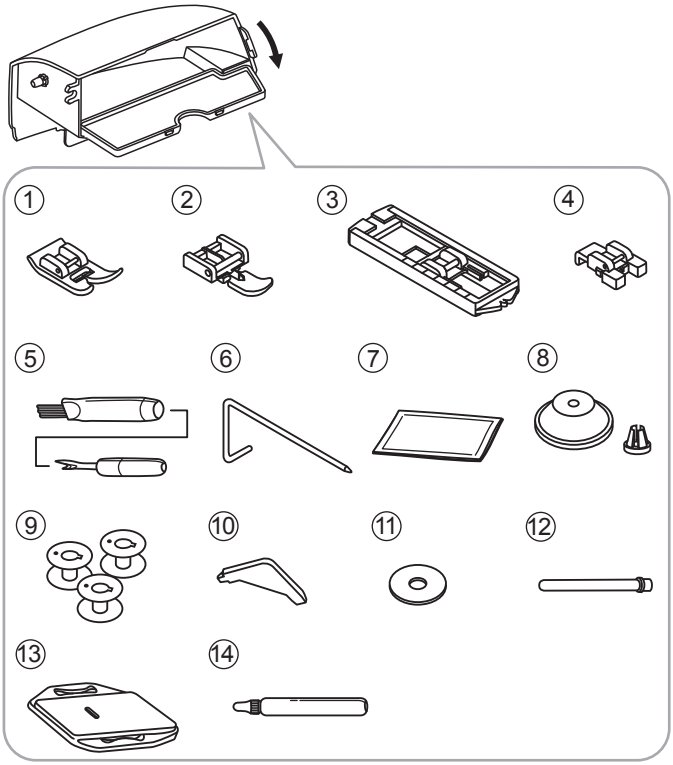

Accessories are stored inside the accessory box.

❖ Standard

1. All purpose foot (already installed)
2. Zipper foot
3. Buttonhole foot
4. Button sewing foot
5. Seam ripper/brush
6. Edge/quilting guide
7. Pack of Needle: 3x single needles (90/14)
8. Spool holder
9. Bobbin (4x) (1x already installed)
10. L-screwdriver
11. Spool pin felt
12. Second spool pin
13. Darning plate
14. Oil bottle

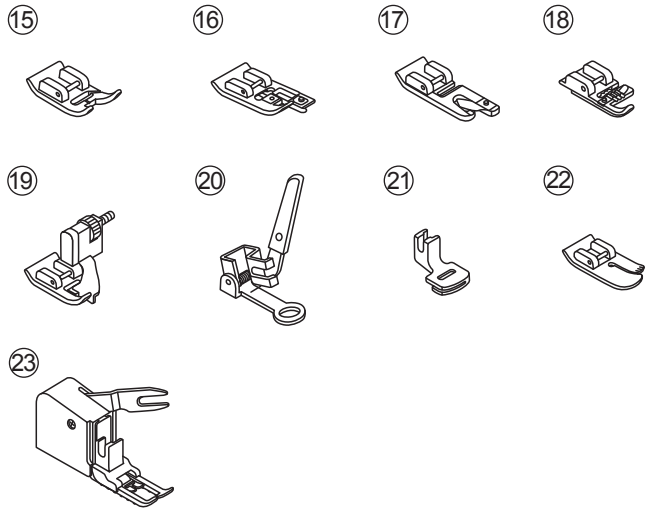

❖ Optional

15. Satin stitch foot
16. Overcasting foot
17. Hemmer foot
18. Cording foot
19. Blind hem foot
20. Darning/embroidery foot
21. Gathering foot
22. Quilting foot
23. Walking foot

Note

To purchase optional accessories, please consult your local dealer for further information.

Connecting machine to power source

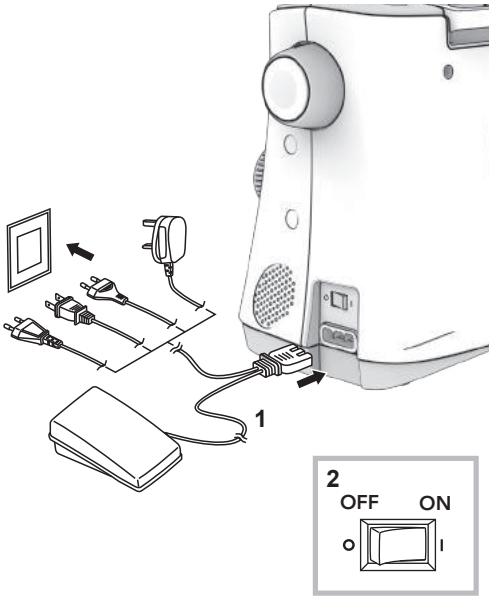

⚠ Attention

Always make sure that the machine is unplugged from power source and the main switch is off ("O"), when the machine is not in use and before inserting or removing parts.

Before connecting the power supply, make sure that the voltage shown on the rating plate is conforming with your main power.

Put the machine on a stable table.

1. Connect the machine to a power source as illustrated.
2. Turn the power switch to on ("I").

The sewing lamp will light up when the switch is turned on.

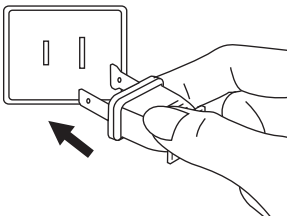

❖ Polarized plug information

This appliance has a polarized plug (one blade is wider than the other), to reduce the risk of electrical shock; this plug will fit in a polarized outlet only one way. If the plug does not fit fully in the outlet, reverse the plug. If it still does not fit, contact a qualified electrician to install the proper outlet. Do not modify the plug in any way.

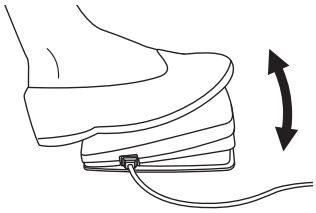

❖ Foot control

When the machine is off, insert the foot control plug into its connector on the machine.

Turn on the machine, and then slowly press down the foot control to start sewing. Release the foot control to stop the machine.

User can quickly kick one step on the foot control to change the needle position and set the stop position at the same time.

Note

Consult a qualified electrician if in doubt as to connect the machine to the power source.

Machine Setup

Sewing table

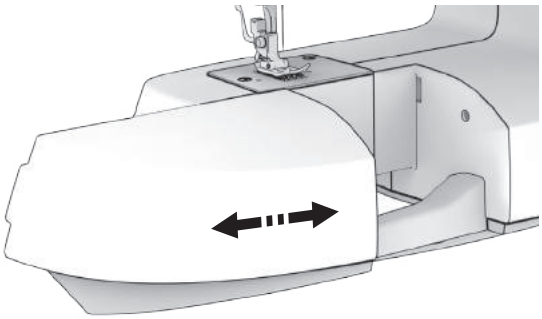

Hold the sewing table horizontally, then pull toward the left to remove it from the machine.

Attach the sewing table, and then push it to the right.

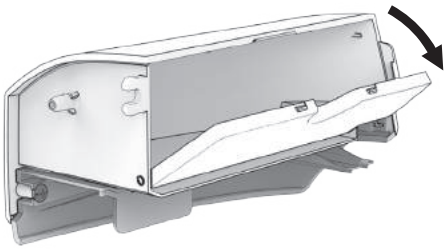

The inside space of the sewing table is used as an accessory box.

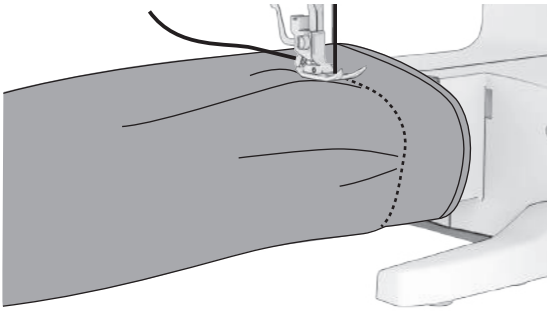

❖ Free arm

Free-arm sewing is convenient for sewing tubular areas such as pant hems and cuffs.

Two-step presser foot lifter

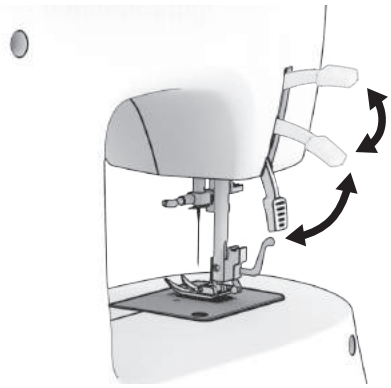

The presser foot lifter is to raise or lower your presser foot.

When sewing multi-layers or thick fabrics, the presser foot can be further raised up manually to allow enough space for your sewing work.

Note
The needle must always be at the highest position.

Winding the bobbin

Please following the number order and see the corresponding illustrations below.

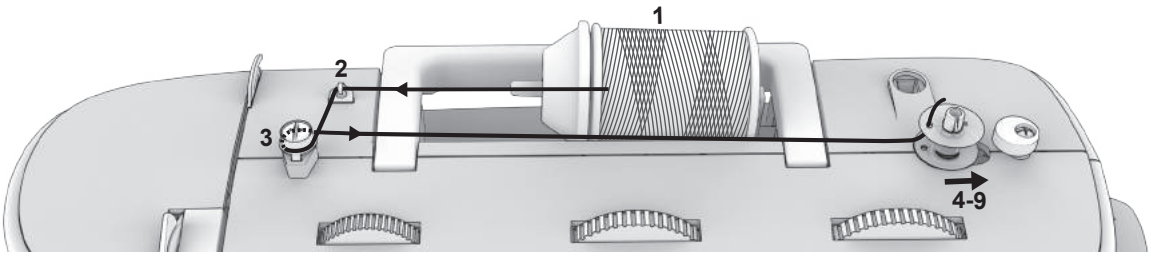

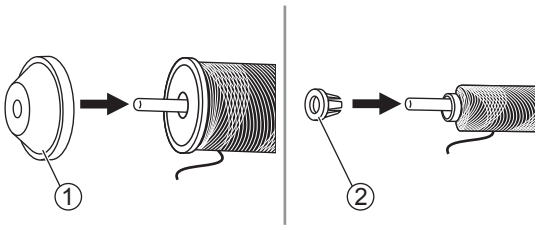

1. Place the thread and spool holder onto the spool pin. For better sewing quality, choose a proper size of the spool holder for the thread and attach it next to the spool.

   ① Large spool holder
   ② Small spool holder

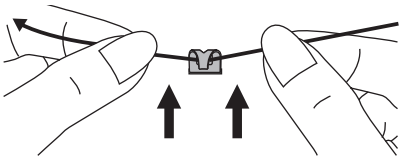

2. Draw the thread from the spool and place the thread in between the upper thread guide.

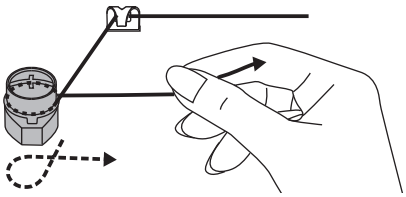

3. Wind the thread clockwise around the tension discs.

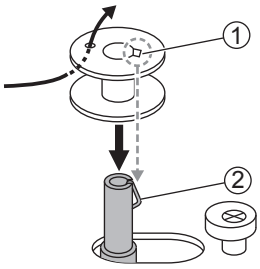

4. Place the thread end through one of the inner holes as illustrated and place the empty bobbin on the bobbin winder spindle. Then align the notch with bobbin winder spindle spring.

   ① Notch
   ② Bobbin winder spindle spring

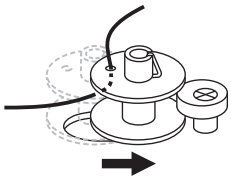

5. Push the bobbin to the right.

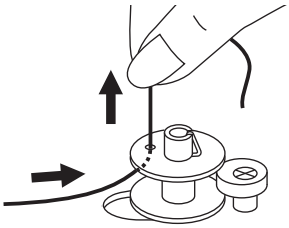

6. Hold the thread tail securely in one hand.

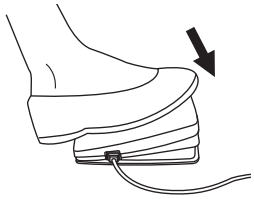

7. Step on the foot control to start winding the bobbin.

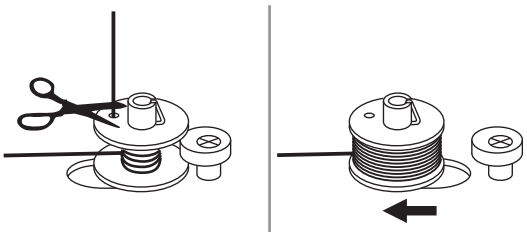

8. After the bobbin has wound a few rounds, stop the machine and cut the thread near the hole of the bobbin. Continue filling the bobbin until it is full. Once the bobbin is full, it rotates slowly. Release the foot control to stop the machine, then push the bobbin winder spindle to the left.

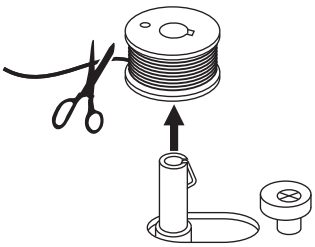

9. Cut the thread and then remove the bobbin.

Note

When the bobbin winder spindle is pushed to the right position, it’s in "bobbin winding" mode and the machine is not allowed to sew and the handwheel will not be able to turn. To start sewing, push the bobbin winder spindle back to the left.

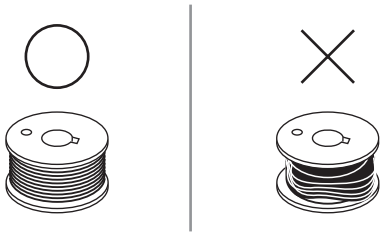

Note

Use a bobbin that has been correctly wound with thread, otherwise the needle may break or the thread tension will be incorrect.

Inserting the bobbin

⚠ Attention

Turn the power switch to off ("O").

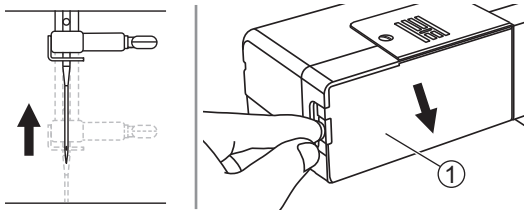

When inserting or removing the bobbin, the needle must be fully raised.

Remove the sewing table, then open the hinged cover.

① Hinged cover

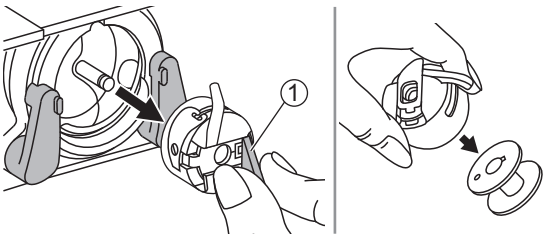

Pull the bobbin case by the hinged latch. Remove the bobbin of the bobbin case.

① Hinged latch

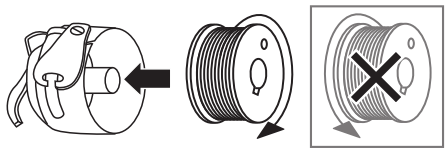

Hold the bobbin case with one hand. Insert the bobbin so that the thread runs in a clockwise direction (arrow).

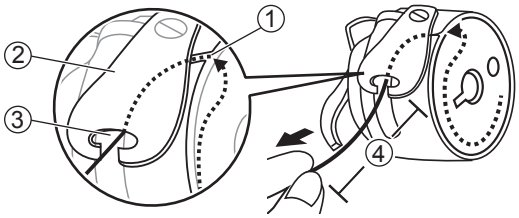

Pull the thread from the slot under the tension spring and through the opening. Leave a 10cm tail of thread.

① Slot
② Tension spring
③ Opening
④ 10cm

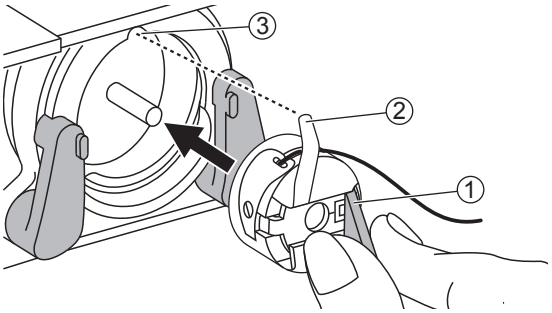

Hold the bobbin case by the hinged latch. Make sure the bobbin case finger fits into the notch at the top of the race as shown in. Close the hinged cover.

① Hinged latch
② Bobbin case finger
③ Notch

Note

If the bobbin case is not properly placed back into the machine, it will fall out form the shuttle immediately after starting to sew.

Threading the upper thread

Please follow the number order and see the corresponding illustrations below. It is important to carry out the threading correctly to get sewing quality. Otherwise several problems will occur.

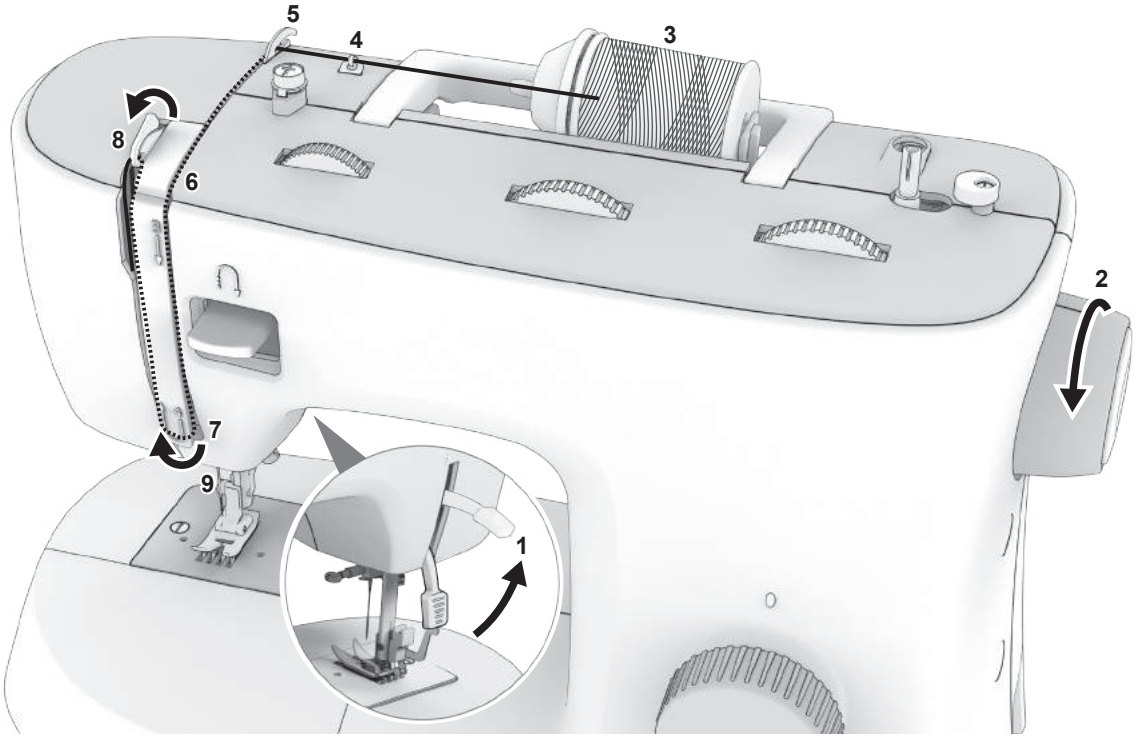

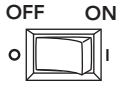

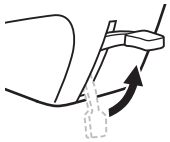

⚠ Attention

Turn the power switch to off ("O").

1. Raise the presser foot lifter.

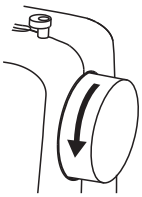

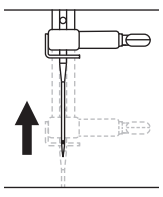

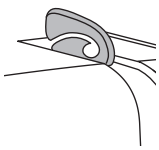

2. Turn the handwheel towards you to bring the needle and take-up lever to highest position.

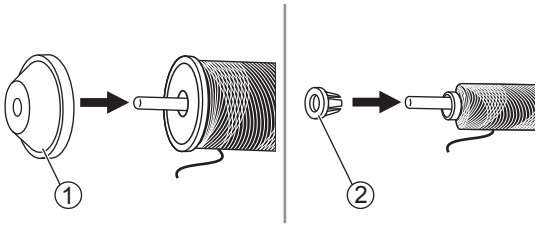

3. Place the thread and spool holder onto the spool pin. For better sewing quality, choose a proper size of the spool holder for the thread and attach it next to to the thread.

   ① Large spool holder

   ② Small spool holder

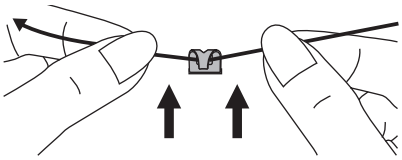

4. Draw the thread from the spool and place the thread in between the upper thread guide.

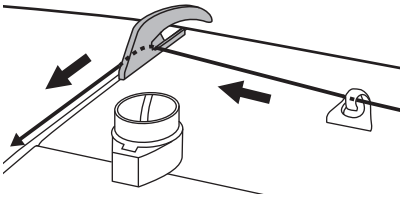

5. Guide the thread ahead and pull the thread through the pre-tension spring as illustrated.

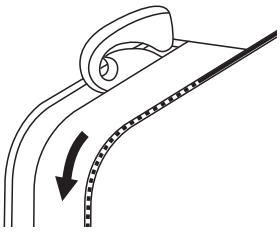

6. Continue to guide the thread into the silver discs to keep the thread in proper tension.

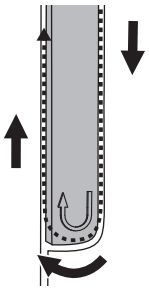

7. Pass the thread under the take-up spring then pull it upwards as arrow marks illustrated.

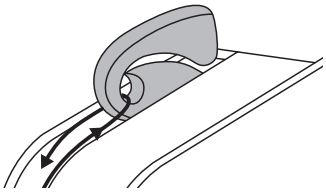

8. Pull the thread to the top then pass the thread through the slotted eye of the take-up lever. Guide the thread down afterwards.

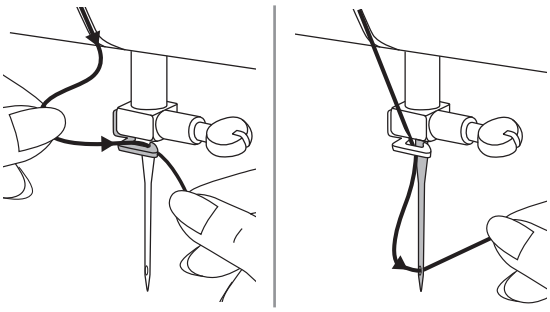

9. Pass the thread behind the flat, horizontal thread guide.

   Pull the end of the thread through the needle from front to rear and pull out about 10 cm of thread.

Using the needle threader (depends on models)

⚠ Attention

Turn the power switch to off ("O").

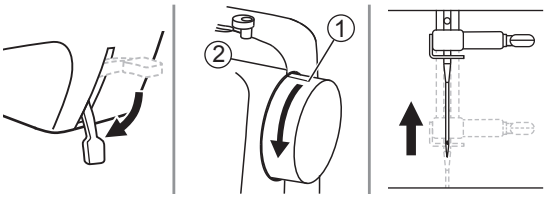

Lower the presser foot lifter. Raise the needle to its hightest position by turning the handwheel toward you until the mark matched with the line on the machine.

① Mark
② Line on the machine

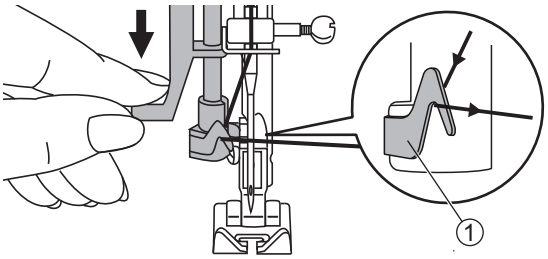

Press down the needle threader for a certain distance and cross the thread over the thread guide.

① Thread guide

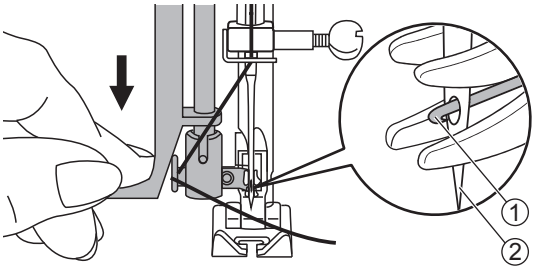

Press down the needle threader as far as it goes.

The needle threader turns automatically to the threading position and the hook pin passes through the needle eye.

① Hook pin
② Needle

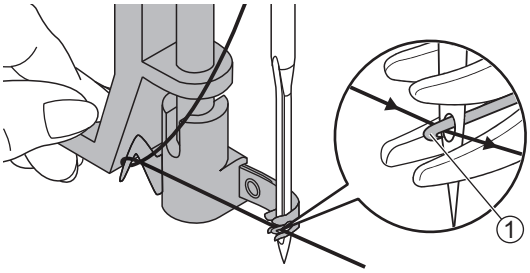

Take the thread in front of the needle and make sure it is under the hook pin.

① Hook pin

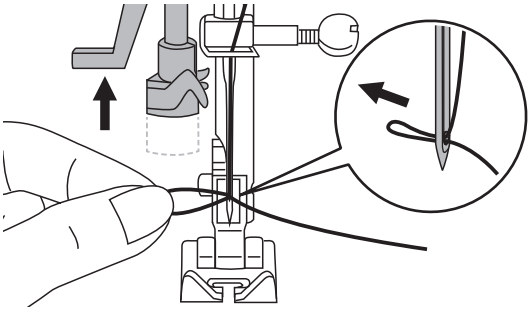

Hold the thread loosely and release the lever slowly. The hook turns and passes the thread through the needle eye forming a loop.

Pull the thread through the needle eye.

Bringing up the bobbin thread

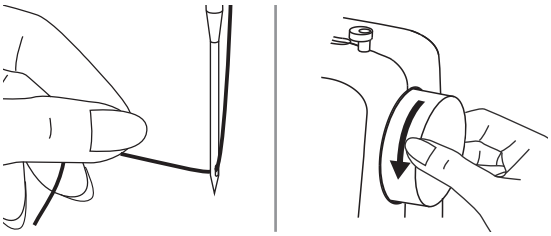

Hold the upper thread with your left hand. Turn the handwheel towards you (counter-clockwise) to lower the needle down below the needle plate then raise it to bring the bobbin thread up.

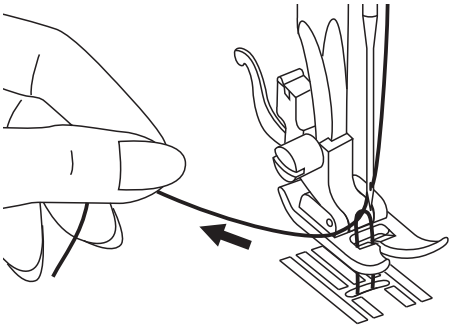

Gently pull on the upper thread to bring the bobbin thread up through the needle plate hole. The bobbin thread will come up in a loop.

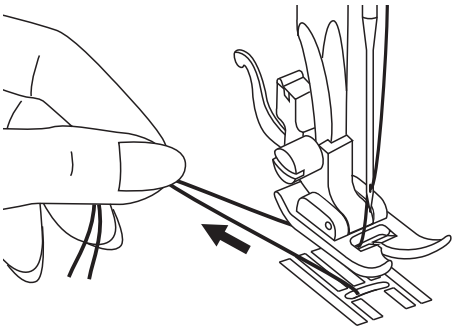

Pull both threads to the back under the presser foot.

Note

Your machine is threaded and ready for sewing, follow the instructions on "Starting to sew" (Page 23) chapter to start sewing.

Replacing the needle

Change the needle regularly, especially when it shows signs of wear or if it causes problems.

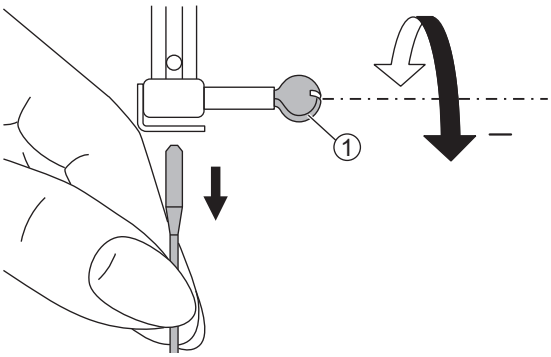

⚠ Attention

Turn the power switch to off ("O") when carrying out below operations!

Turn the handwheel toward you to raise the needle then loosen the needle clamp screw to remove the needle.

① Needle clamp screw

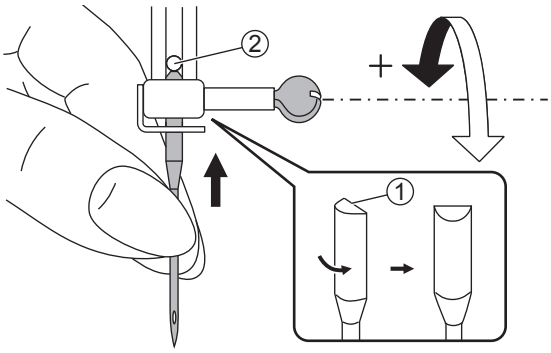

When inserting a new needle, keep the flat side of the shaft to the back.

Push the needle into the clamp until it touches the pin and stops. Then secure it by tightening the needle clamp screw.

① Flat side of the shaft
② Pin

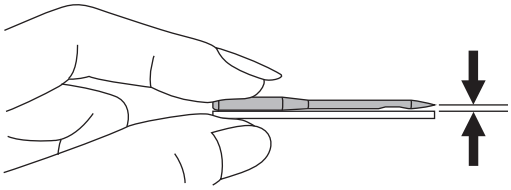

Needles must be in perfect condition.

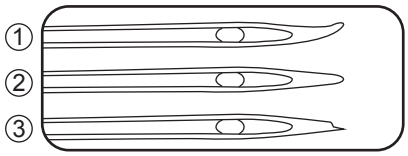

Problems can occur with:

① Bent needles
② Blunt needles
③ Damaged points

Matching needle/fabric/thread

NEEDLE SIZE	FABRICS	THREAD
9-11 (70-80)	Lightweight fabrics- thin cottons, voile, serge, silk, muslin, Qiana, interlocks, cotton knits, tricot, jerseys, crepes, woven polyester, shirt & blouse fabrics.	Light-duty thread in cotton, nylon, polyester or cotton wrapped polyester.
11-14 (80-90)	Medium weight fabrics- cotton, satin, kettleclote, sailcloth, double knits, lightweight woolens.	Most threads sold are medium size and suitable for these fabrics and needle sizes. Use polyester threads on synthetic materials and cotton on natural woven fabrics for best results. Always use the same thread on top and bottom.
14 (90)	Medium weight fabrics- cotton duck, woolen, heavier knits, terrycloth, denims.	
16 (100)	Heavyweight fabrics- canvas, woolens, outdoor tent and quilted fabrics, denims, upholstery material (light to medium).	

Note

1. In general, fine threads and needles are used for sewing fine fabrics, thicker threads and needles are used for sewing heavy fabrics.
2. Always test thread and needle size on a small piece of fabric which will be used for actual sewing.
3. Use the same thread for needle and bobbin.
4. Use a stabilizer or place a backing for fine or stretchy fabrics, and select the correct presser foot.
5. It is recommended that a 90/14 needle should be used when embroidering on heavyweight fabrics or stabilizing products (for example, denim, puffy foam, etc.). A 75/11 needle may bend or break, which could result in injury.
6. For transparent nylon thread, always use needle 90/14 - 100/16. The same thread is usually used for the bobbin thread and upper threading.

Changing the presser foot

⚠ Attention

Turn the power switch to off ("O") when carrying out any of the operations below!

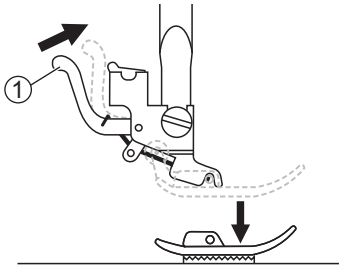

❖ Remove the presser foot

Raise the presser foot lifter. Press the back lever to release the presser foot.

① Lever

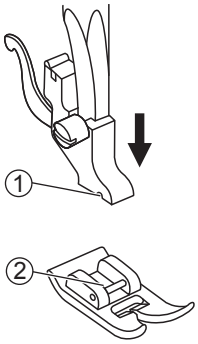

❖ Attach the presser foot

Lower the presser foot lifter until the cut-out meets the pin.

The presser foot will attach to the presser foot holder automatically.

① Cut-out
② Pin

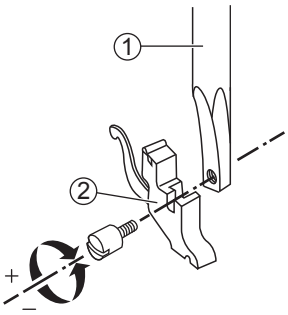

❖ Remove and insert the presser foot holder

Raise the presser foot lifter. Align the presser foot holder with the lower left side of the presser bar. Hold the presser foot holder, then tighten the screw using the enclosed L-screwdriver.

① Presser foot bar
② Presser foot holder

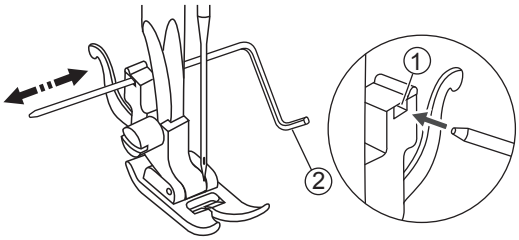

❖ Insert the edge/quilting guide

Insert the edge/quilting guide in the slot as illustrated. Adjust the needed width according to your sewing applications.

① Slot
② Edge/quilting guide

Thread tension

Proper tension setting is important for sewing. There is no single tension setting appropriate for all the stitch functions and fabrics.

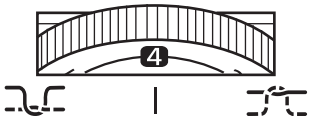

Basic thread tension setting: "4".

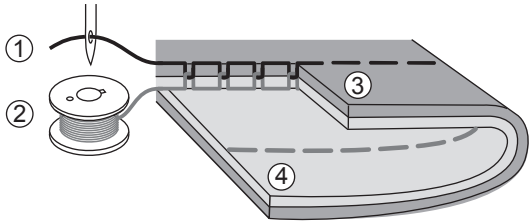

Normal thread tension for straight stitch sewing.

① Upper thread
② Bobbin thread
③ Surface
④ Wrong side

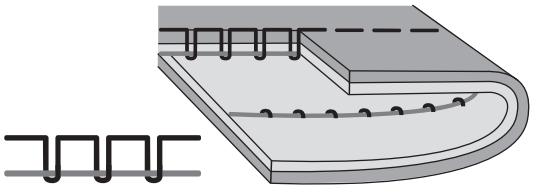

Thread tension is too loose for straight stitch sewing. Turn the dial to the higher number.

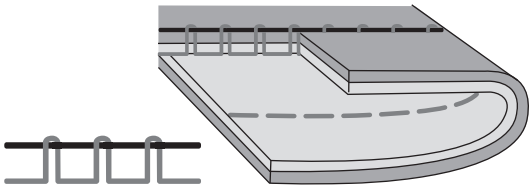

Thread tension is too tight for straight stitch sewing. Turn the dial to the lower number.

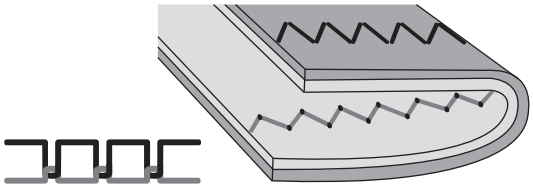

Normal thread tension for zig zag and decorative sewing.

For all decorative sewing you will always obtain a nicer stitch and less fabric puckering.

Correct thread tension is when a small number of the upper thread appears on the bottom side of fabric.

Sewing Basics

How to choose your pattern

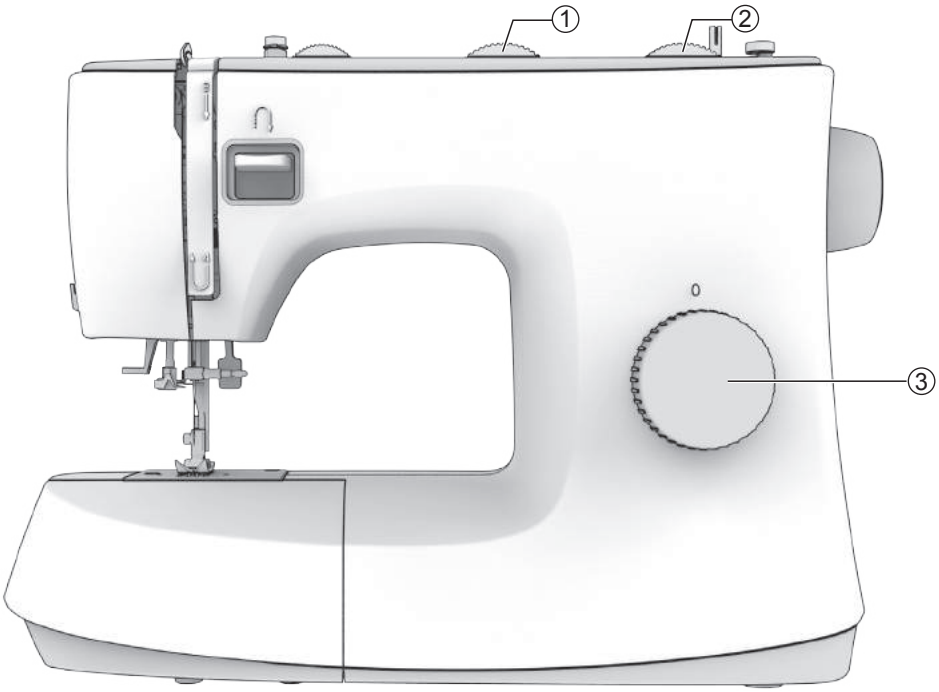

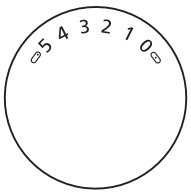

①

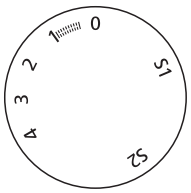

②

To select a stitch, simply turn the pattern selector dial. The pattern selector dial may be turned in either direction.

For straight stitch, select pattern " " or " " with the pattern selector dial.

For zigzag stitch, select pattern " " or " " with the pattern selector dial. Adjust the stitch length and stitch width according to the fabric being used.

To obtain the other patterns, turn the stitch length dial to "S1" or "S2", select the pattern desired with pattern selector dial. (depends on models)

① Stitch width dial (depends on models)
② Stitch length dial (depends on models)
③ Pattern selector dial

Straight stitch

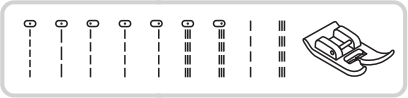

Using the all purpose foot.

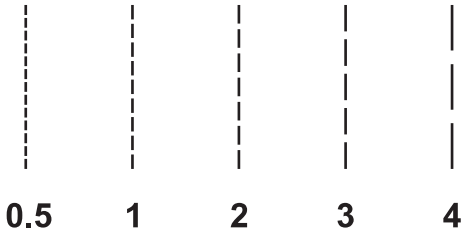

❖ Adjusting the stitch length

Turn the stitch length dial, and the length of the individual stitches will decrease as the dial approaches "0". The length of the individual stitches will increase as the dial approaches "4".

Generally speaking, the thicker the fabric, thread and needle, the longer the stitch should be.

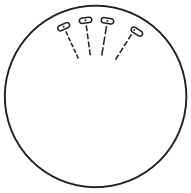

If the machine has no stitch length dial function, use the pattern selector dial to adjust the stitch length.

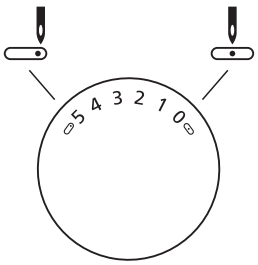

❖ Changing the needle position

The needle position for straight stitches can be changed by adjusting the stitch width dial.

The "0" is the center and "5" is full right needle position.

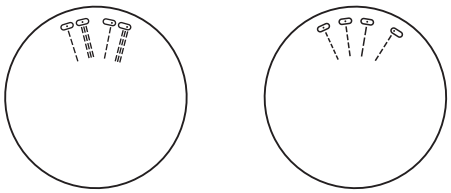

If the machine has no stitch width dial function, use the pattern selector dial to adjust the needle position.

Zigzag stitch

Using the all purpose foot.

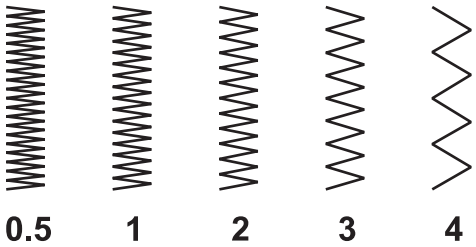

❖ Adjusting the stitch length

The density of zigzag stitches increase as the setting of stitch length approaches "0".

Neat zig-zag stitches are usually achieved at "2.5" or below.

Closed up zigzag stitches (close together) are referred to as a satin stitch.

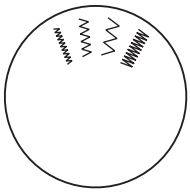

If the machine has no stitch length dial function, use the pattern selector dial to adjust the stitch length.

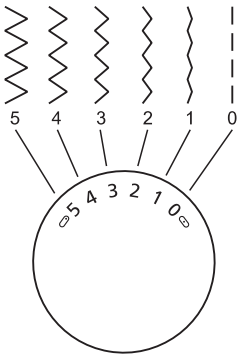

❖ Adjusting the stitch width

The width increases as you move stitch width dial from "0-5".

The width can be reduced on any patterns.

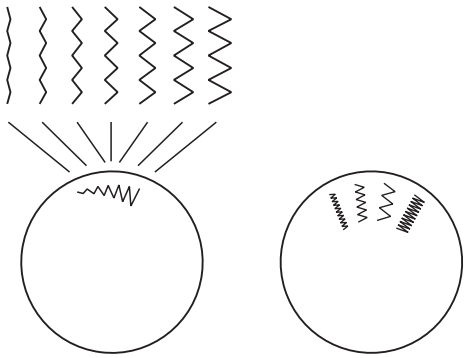

If the machine has no stitch width dial function, use the pattern selector dial to adjust the stitch width.

Starting to sew

Make sure you follow the needle/fabric/thread combinations (Page 16) and use the suggested presser foot before sewing.

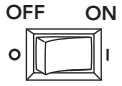

1. Turn the power switch to on ("I").

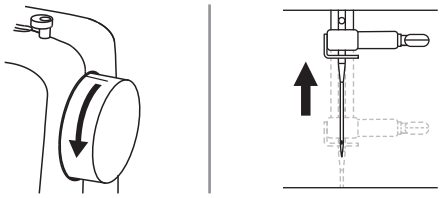

2. Turn the handwheel towards you (counter-clockwise) to bring the needle to highest position.

3. Raise the presser foot lifter.

   Turn the pattern selection dial to select a stitch.

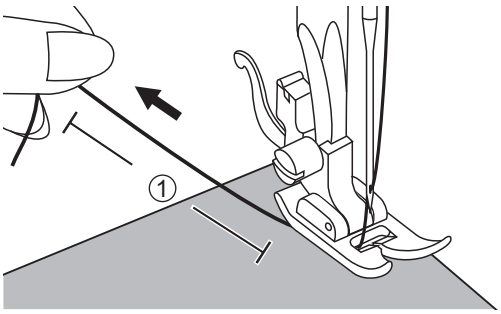

4. Place the fabric under the presser foot, pass the thread under the presser foot, and then pull out about 10cm of thread toward the rear of the machine.

   ① 10cm

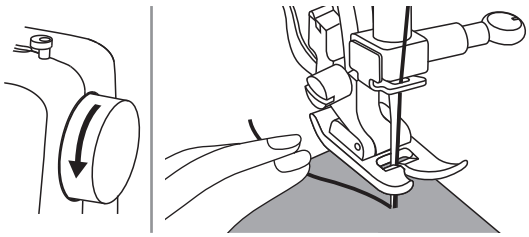

5. Turn the handwheel toward you (counter-clockwise) to lower the needle into the fabric at the beginning of the stitching.

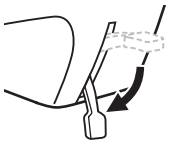

6. Lower the presser foot lifter.

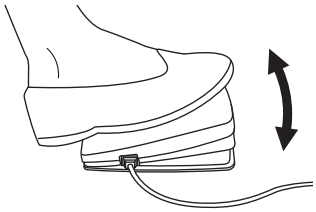

7. Slowly press down the foot control to start sewing. Release the foot control to stop the machine.

Note

You can use reverse sewing for back tacking and reinforcing seams by pressing the reverse sewing lever. Please refer to "Useful skills" chapter (Page 25) for more information.

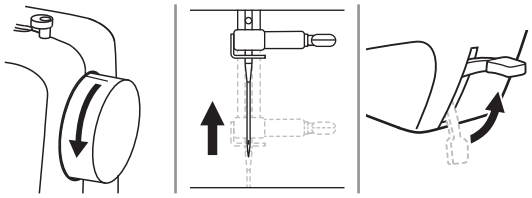

8. Turn the handwheel toward you (counter-clockwise) to raise the needle. Raise the presser foot lifter and remove the fabric.

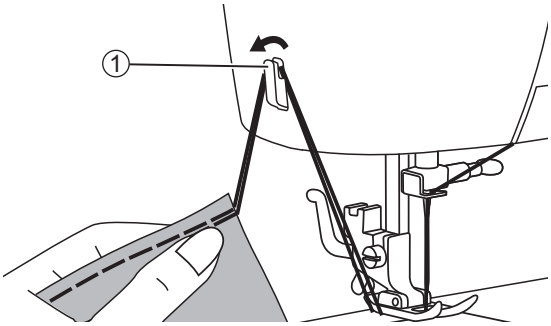

9. Guide both threads to the side of the face plate and into the thread cutter. Pull the threads down to cut them.

   ① Thread cutter

Useful skills

Various ways to achieve better results for your sewing projects are described below. Refer to these tips when sewing your project.

The results depend on types of fabrics and stitches. Please use the same fabric of the project and do a sewing test in advance.

For the trial sewing, use a piece of fabric and thread that are same as those used for your project and check the thread tension and stitch length and width.

Since the results differ depending on types of stitching and layers of fabric sewn, perform the trial sewing under the same conditions that will be used with your project.

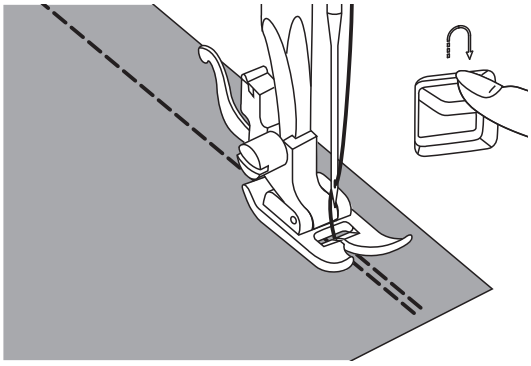

❖ Reverse sewing

Reverse stitching is used to secure the threads at the beginning and at the end of a seam.

Press the reverse sewing lever and sew 4-5 stitches.

The machine will sew forward when the lever is released.

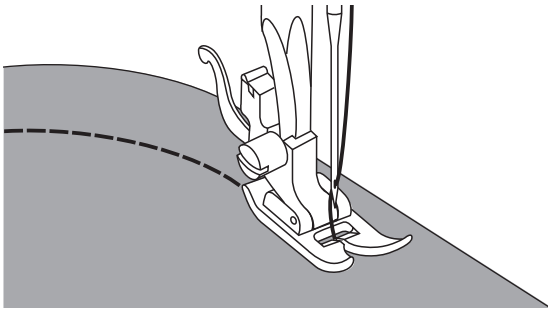

❖ Sewing curves

Slightly change the sewing direction to sew around the curve.

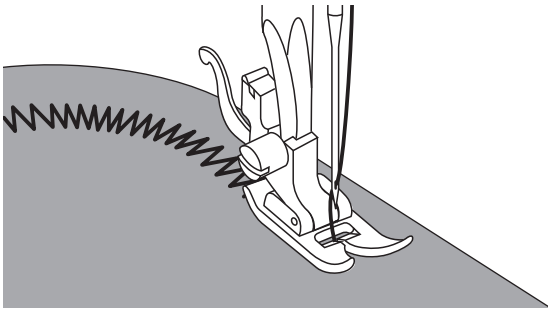

When sewing along a curve while using a zigzag stitch, select a shorter stitch length in order to obtain a finer stitch.

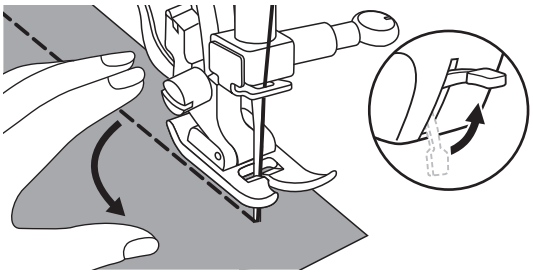

❖ Sewing corners

Stop the sewing machine when you reach a corner.

Lower the needle into the fabric. Raise the presser foot. Use the needle as a pivot and turn the fabric 90°.

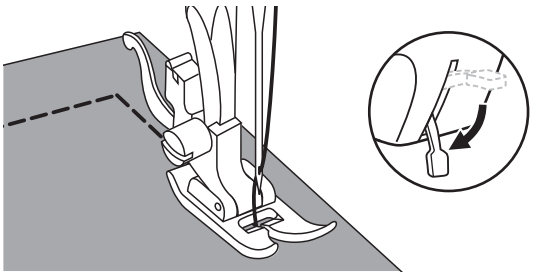

Lower the presser foot and resume sewing.

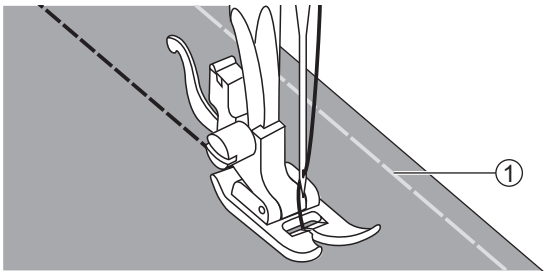

❖ Sewing stretch fabrics

Baste the pieces of fabric together, and then sew without stretching the fabric.

① Basting

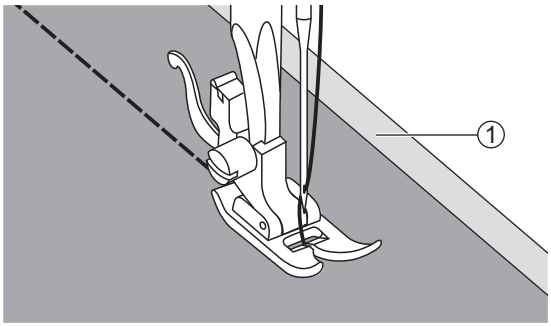

❖ Sewing thin fabrics

When sewing thin fabrics, the stitches may become misaligned or the fabric may not feed correctly. If this occurs, place thin paper or stabilizer material under the fabric and sew it together with the fabric.

When you have finished sewing, tear off any excess paper.

① Stabilizer material or paper

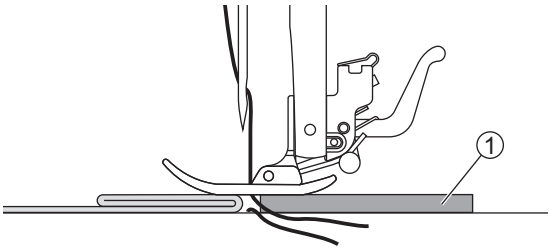

❖ Sewing heavy fabric

You can place cardboard or thick fabric with the same thickness at the back of the seam. Or support the presser foot while feeding by hand and sewing toward the folded side.

① Cardboard or thick fabric

Utility Stitches

Stretch stitch

Use this stitch with knitted tricot or other stretchy fabrics. The stitch enables your seam to stretch without breaking the thread.

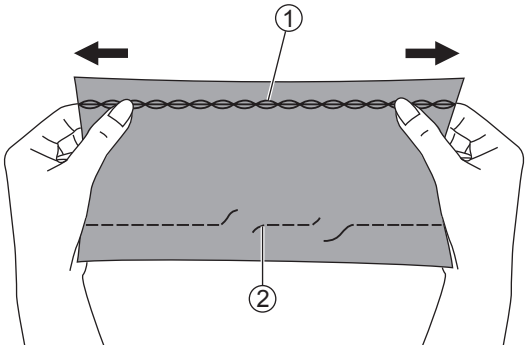

Good for easy to ravel and knit fabrics.
It's good for joining durable fabric such as denims.

These stitches can also be used as a decorative top stitches.

① Stretch stitch
② Straight stitch

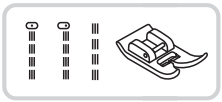

Using the all purpose foot.

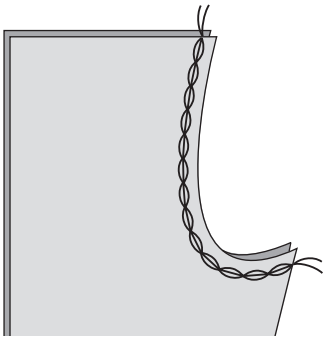

❖ Straight stretch stitch

Straight stretch stitch is used to add triple reinforcement to stretch and hardwearing seams.

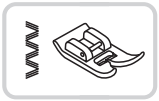

Using the all purpose foot.

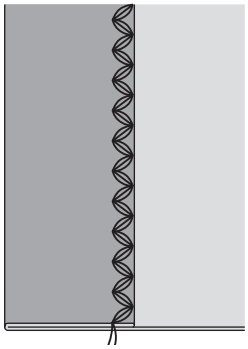

❖ Zigzag stretch stitch

Triple zigzag stretch stitch is suitable for firm fabrics like denim, poplin, etc.

Sewing stretch fabrics and elastic tape

When elastic tape is attached to the cuff or waist of a piece of clothing, the finished dimensions will be that of the stretched elastic tape. Therefore, it is necessary that a suitable length of the elastic tape be used.

Using the all purpose foot.

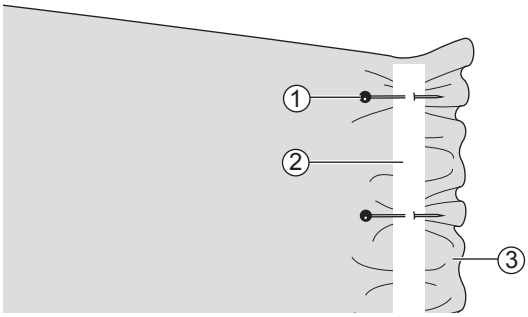

Pin the elastic tape to the wrong side of fabric at a few points to make sure that the tape is uniformly positioned on the fabric.

① Pin
② Elastic tape
③ Wrong side

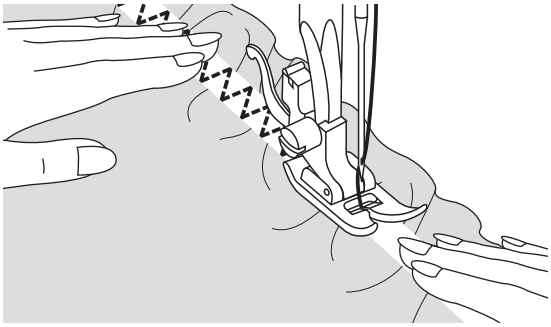

Sew the elastic tape to the fabric while stretching the tape so that it is the same length as the fabric.

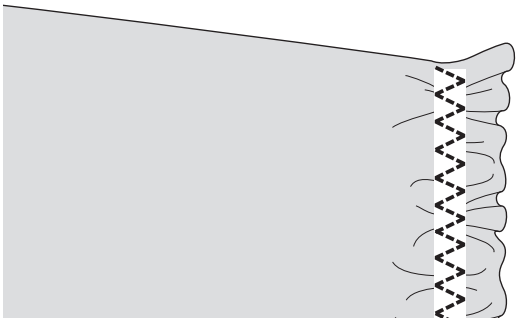

While pulling the fabric behind the presser foot with your left hand, pull the fabric at the pin nearest the front of the presser foot with your right hand.

Note

When sewing, be sure that the needle does not touch any pins, otherwise the needle may bend or break.

Overcasting stitch

Sewing overcasting stitches along the edge of fabric to prevent it from fraying.

Using the all purpose foot.

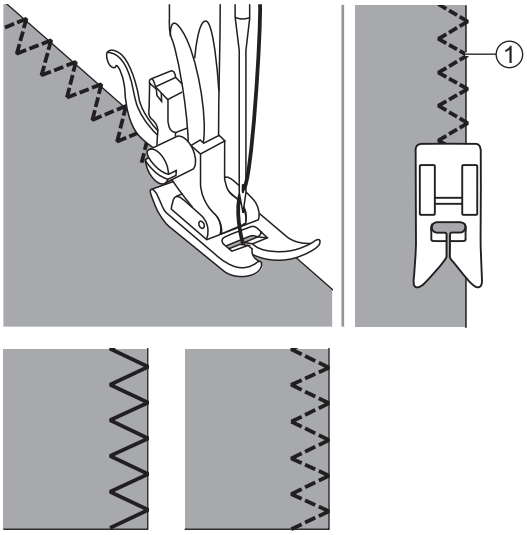

Sewing the overcasting along the edge of the fabric so that the needle drops over the edge of the fabric on the right side.

① Needle drop point

Blind Hem

Secure the bottom of skirts and pants with a blind hem, this stitch will sew with invisible stitch on the right side of the fabric.

Using the all purpose foot.

Blind hem/lingerie for firm fabrics.

Blind hem for stretch fabrics.

Note
Please use the same fabric of the project and do a sewing test in advance.

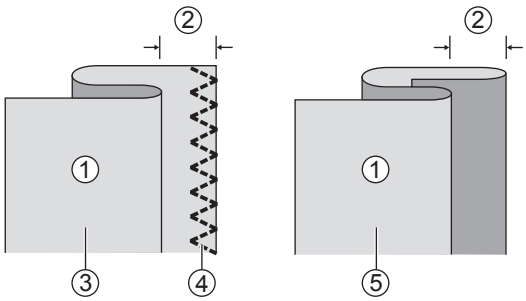

Fold the fabric as illustrated with the wrong side up.

① Wrong side
② 5mm
③ For heavy weight fabric
④ Overcasting stitch
⑤ For light/medium weight fabric

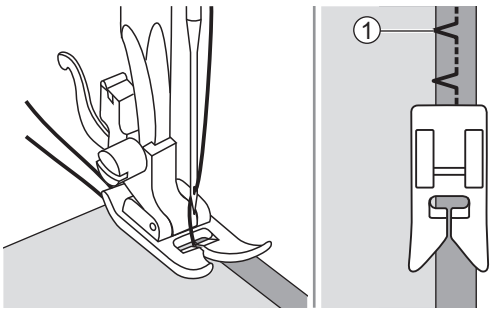

Place the fabric under the foot. Turn the handwheel forwards until the needle swings fully to the left. It should just pierce the fold of the fabric.

① Needle drop point

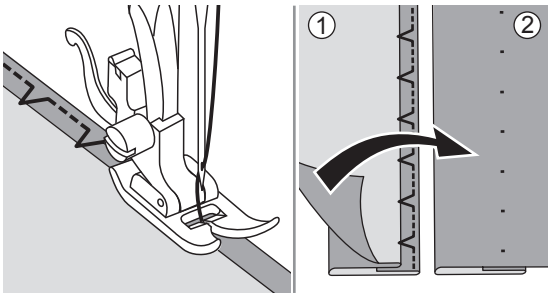

Sew slowly, guiding the fabric carefully along the edge of the guide.

Turn over the fabric.

① Wrong side
② Right side

4-Step Buttonhole stitch

Buttonholes can be adapted to the size of the button.

For stretch fabric or thin fabric, it is recommended to use a stabilizer for a better buttonhole sewing. Slightly reduce upper thread tension to produce better results.

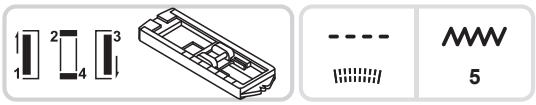

Using the buttonhole foot.

Note
Please use the same fabric of the project and do a sewing test in advance.

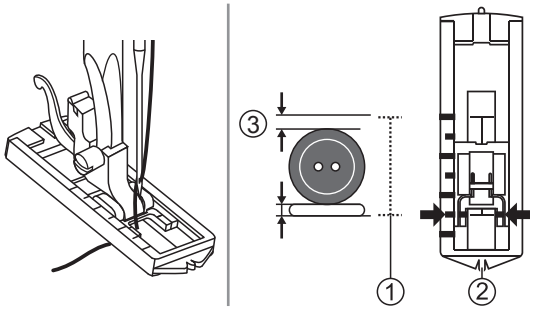

Measure diameter and thickness of button and add 3mm for bartacks to obtain correct buttonhole length; mark buttonhole size on fabric.

Place fabric under the foot, so that marking on the buttonhole foot aligns with starting marking on fabric. Lower the foot, so that the buttonhole center line marked on the fabric aligns with the center of the buttonhole foot.

① Buttonhole size
② Buttonhole foot center
③ 3mm

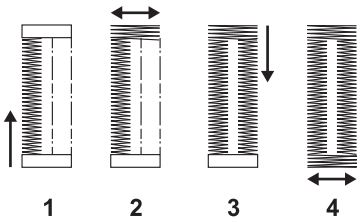

Follow the 4-step sequence changing from one step to another with the pattern selector dial. When moving from step to step through the buttonhole process, be sure that the needle is raised before turning the pattern selector dial to the next step. Take care not to sew too many stitches in steps 2 and 4.

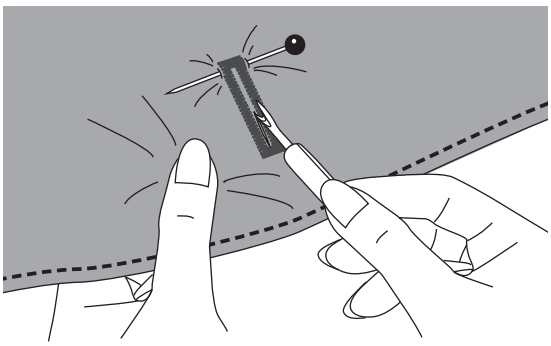

Cut the center of the buttonhole being careful not to cut any stitches on either side. Use a pin as a stopper at the bar tack so you do not cut too much.

Note
When cutting the buttonhole with the seam ripper, do not place your hands in the cutting direction, otherwise injuries may result.

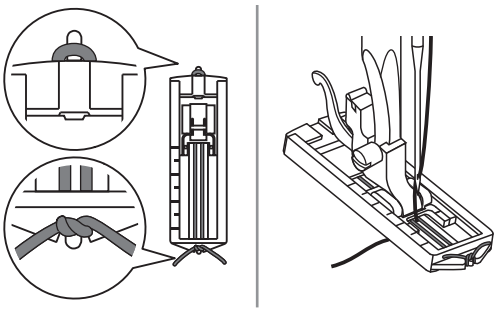

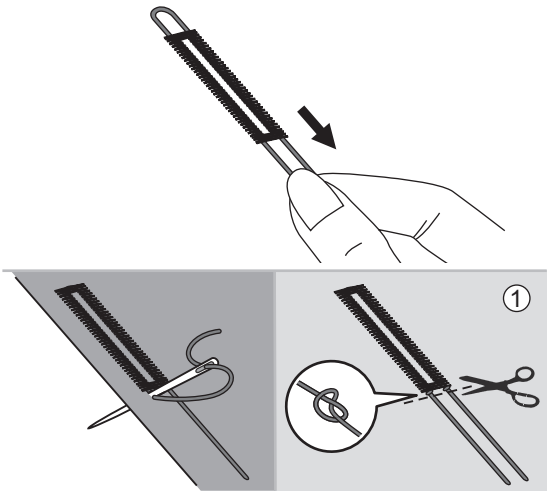

❖ Making a buttonhole on stretch fabrics

When sewing buttonholes on stretch fabric, hook heavy thread or cord under the buttonhole foot.

Attach the buttonhole foot. Bring the two gimp thread ends to the front of the foot and insert them into the grooves, then tie them there temporarily. Lower the presser foot and start sewing.

Set the stitch width to match the diameter of the gimp thread.

Once sewing is completed, pull the gimp thread gently to remove any slack. Cross the gimp in front of the needle and thread gimp ends into a large needle, pull to the wrong side and knot ends before cutting excess.

① Wrong side

Note
It is suggested that you sew with a stabilizer material under the fabric.

Button sewing

Buttons can be sewn on with the sewing machine. Buttons with 2 or 4 holes can be attached.

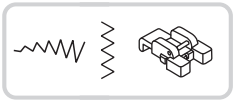

Using the button sewing foot with darning plate.

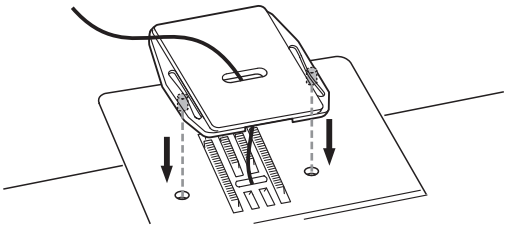

Install the darning plate.

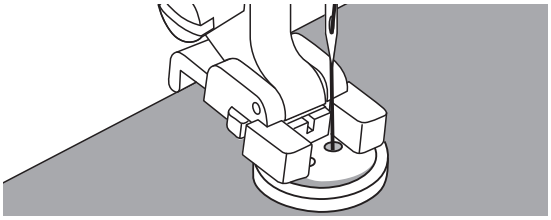

Put the work under the foot and place the button in desired position, then lower the foot.

Select the straight stitch and sew a few securing stitches.

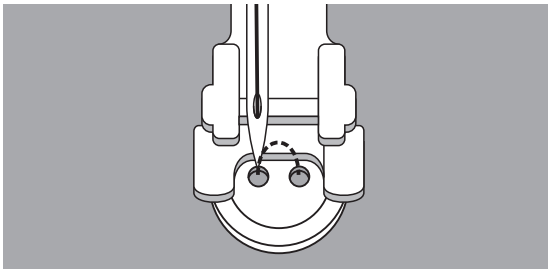

Machine model without width dial: Select the zig-zag stitch width according to the distance between the two holes of the button.

Machine model with width dial: Select the zig-zag stitch and adjust the stitch width according to the distance between the two holes of the button.

Turn the handwheel to check that the needle goes cleanly into the left and right holes of the button.

Slowly sew on the button with about 10 stitches. Select the straight stitch and sew a few securing stitches.

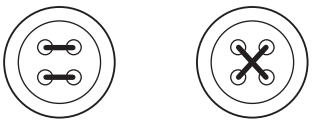

For buttons with 4 holes, sew through the front two holes first, push work forward and then sew through the back two holes.

When you finish the work, remove the darning plate.

Zipper insertion

This foot can be set to sew on each side of the zipper, the edge of the foot guides the zipper to ensure straight placement.

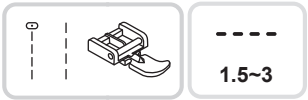

Using the zipper foot.

⚠ Attention

Zipper foot should be used for sewing straight stitches only. It is possible that the needle could hit the presser foot and break when sewing other patterns.

When sewing, be sure that the needle does not touch the zipper, otherwise the needle may bend or break.

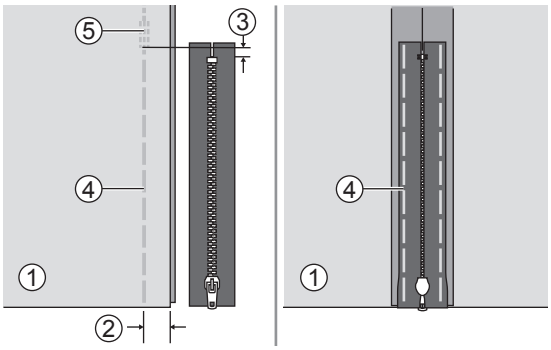

❖ Inserting a centered zipper

Place the right sides of the fabric together. Sew a bottom seam 2cm from the right edge of the zipper bottom stop position. Sew few reverse stitches for fixed. Increase the stitch length to maximum, set the tension below 2 and baste the remaining length of the fabric.

Press open the seam allowance. Place the zipper face down on the seam allowance with the teeth against the seam line. Baste the zipper tape in place.

① Wrong side
② 2cm
③ 5mm
④ Basting
⑤ Reverse stitches

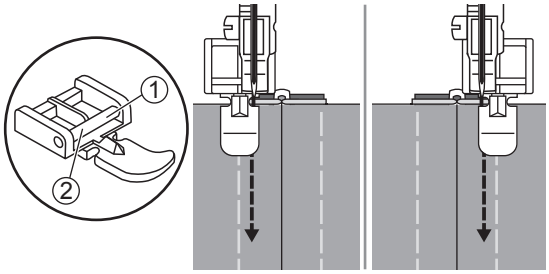

Attach the zipper foot.

① Attach the right pin for sewing the left side of the zipper.
② Attach the left pin for sewing the right side of the zipper.

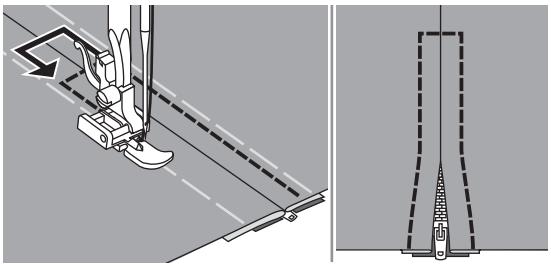

Stitching around the zipper. Remove the basting and press.

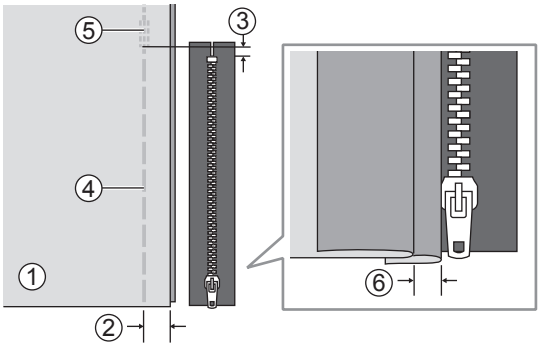

❖ Inserting a side zipper

Place the right sides of the fabric together. Sew a bottom seam 2cm from the right edge of the zipper bottom stop position. Sew few reverse stitches for fixed. Increase the stitch length to maximum, set the tension below 2 and baste the remaining length of the fabric.

Fold back to the left the seam allowance. Turn under the right the seam allowance to form a 3mm fold.

① Wrong side
② 2cm
③ 5mm
④ Basting
⑤ Reverse stitches
⑥ 3mm

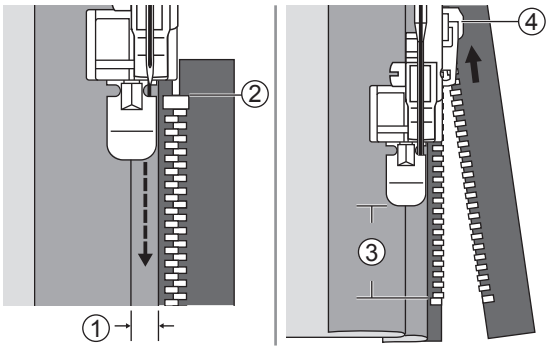

Attach the zipper foot. Attach the right pin for sewing the left side of the zipper. Sew the zipper to the piece of fabric with the extra 3mm, starting from the end of the zipper.

Stop the machine about 5cm from the top of the zipper. Lowered the needle into the fabric, raise the presser foot lever, and then open the zipper and continue sewing.

① 3mm
② The end of zipper
③ 5cm
④ Zipper

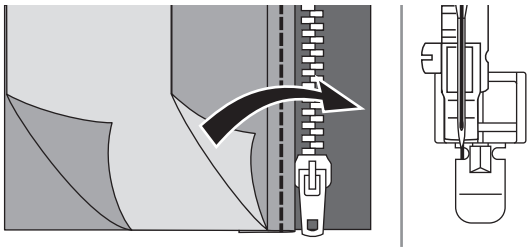

Turn the fabric right side out. Attach the left pin for sewing the rightside of the zipper.

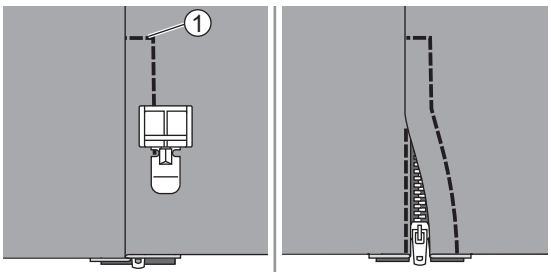

Stitch across the lower end and the right side of the zipper.

① Lower end

Stop the machine about 5cm from the top of the zipper. Remove the basting and open the zipper. Stitch the remaining of the seam.

Gathering

Ideal for clothing as well as home decor. It works best on thin to medium weight fabrics.

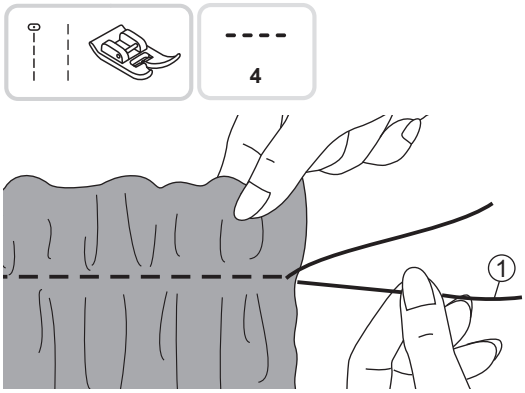

Using the all purpose foot.

Before sewing, please check the upper and bobbin threads are already pulled out about 5cm to leave enough room for sewing. Please refer to "Bringing up the bobbin thread " chapter for more information.

Set the tension below 2. Sew a single row (or many rows) of straight stitches.

Pull the bobbin threads and distribute the gathers evenly. Secure the threads at the other end.

① Bobbin thread

Smocking

The decorative stitch created by stitching or embroidering over gathers is called "smocking". It is used to decorate the front of blouses or cuffs. The smocking stitch adds texture and elasticity to the fabric.

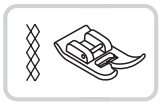

Using the all purpose foot.

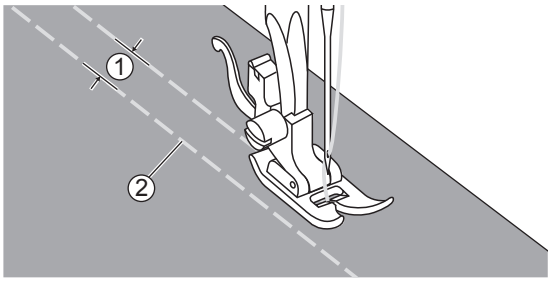

Increase the stitch length to maximum, set the tension below 2 and basting lines 1cm across the area to be smocked.

① 1cm
② Basting

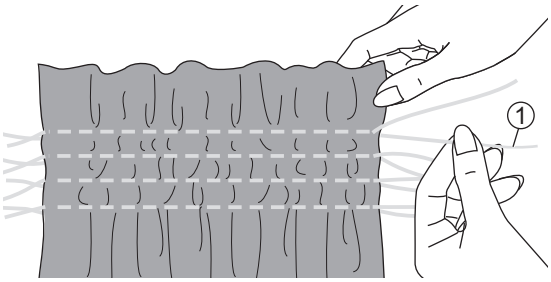

Knot the threads along one edge.

Pull the bobbin threads and distribute the gathers evenly. Secure the threads at the other end.

① Bobbin thread

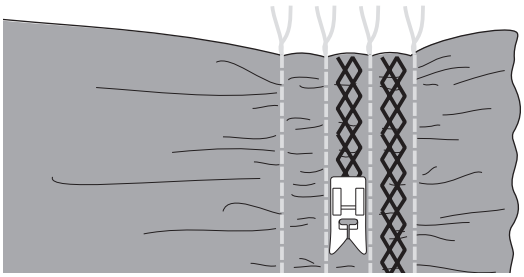

Reduce the tension if necessary and sew decorative pattern stitches between the straight seams.

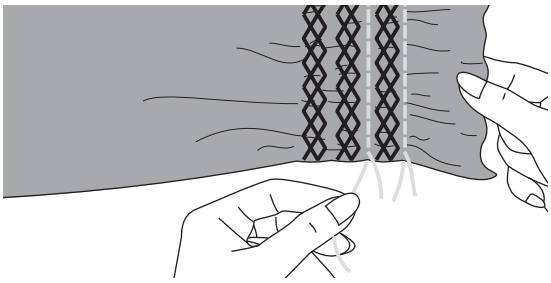

Pull out the basting.

Free motion darning, embroidery and monogramming

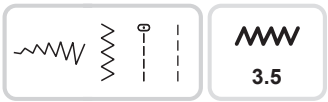

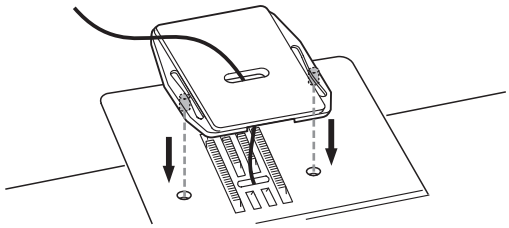

❖ Preparation for embroidering and monogramming

* Embroidery hoop is not included with the machine.

Install the darning plate.

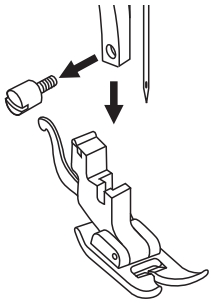

Remove the presser foot and the presser foot holder.

Draw the desired lettering or design on the surface of the fabric.

Stretch the fabric between the embroidery hoop as firmly as possible.

Place the fabric under the needle. Make sure the presser foot bar is down to its lowest position.

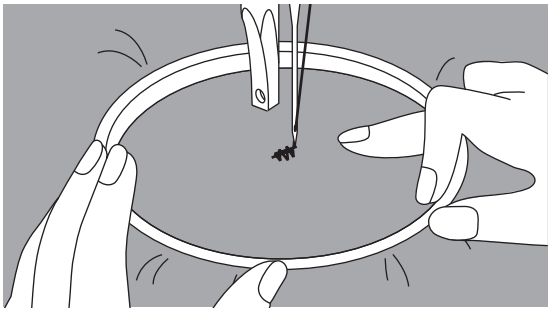

Turn the handwheel towards you to bring up the bobbin thread through the fabric. Sew a few securing stitches at the starting point.

Hold the hoop with thumb and forefinger of both hands while pressing the material with the middle and third finger and supporting the outside of the hoop with your small finger.

⚠ Attention

Keep fingers away from moving parts, especially needles.

Note

When you finish the work, move the darning plate.

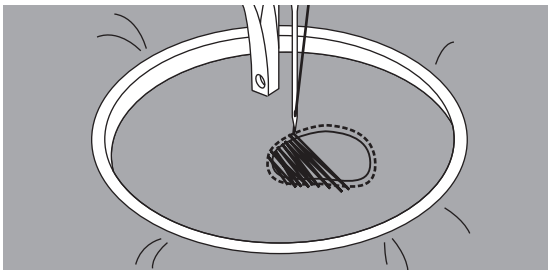

❖ Darning

First sew around the edges of the hole to secure the threads. Working from left to right, sew over the hole in a constant and continuous movement.

Turn the work by 1/4 and sew over the first stitching moving the work slower over the hole to separate the threads and not form big gaps between the threads.

Note

Free motion darning is accomplished without the sewing machine internal feed system. Movement of the fabric is controlled by the operator. It is necessary to coordinate sewing speed and movement of fabric.

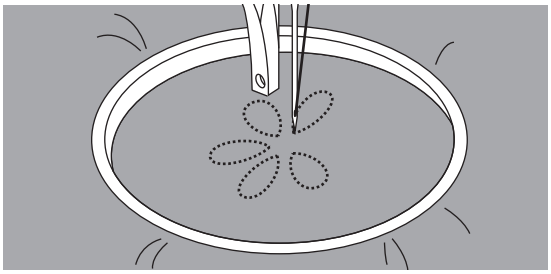

❖ Embroidery

Stitch along the outline of the design by moving the embroidery hoop. When sewing, make sure to maintain a constant speed.

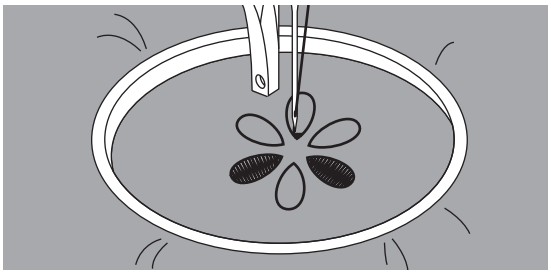

Fill in the design working from the outline towards the inside. Keep the stitches close together.

You will get longer stitches by moving the hoop faster and shorter stitches by moving the hoop slower.

Secure with reinforcement stitches at the end of the design.

❖ Monogramming

Sew at constant speed, moving the embroidery hoop slowly along the lettering.

When the letter is finished, secure with reinforcement stitches at the end of the design.

Quilting

Sandwich batting between the top and bottom layers of fabric is call "Quilting". The top layer is usually formed by multiple geometrically shaped pieces of materials joined together.

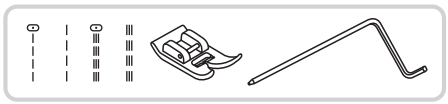

Using the all purpose foot with edge/quilting guide.

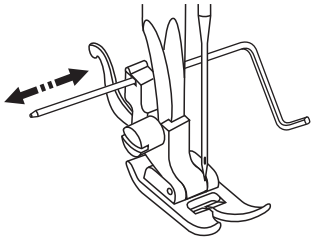

❖ Using the edge/quilting guide

Attach the edge/quilting guide in the presser foot holder as illustrated and set the space as you desire.

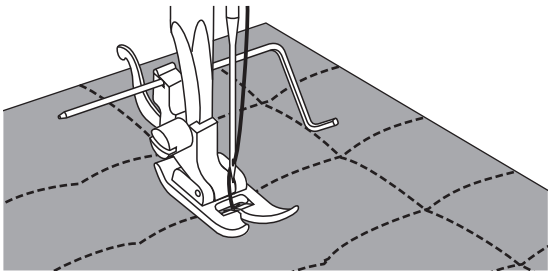

Sew the first row and move over the fabric to sew successive rows with the guide riding along the previous row of stitching.

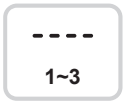

Using the all purpose foot.

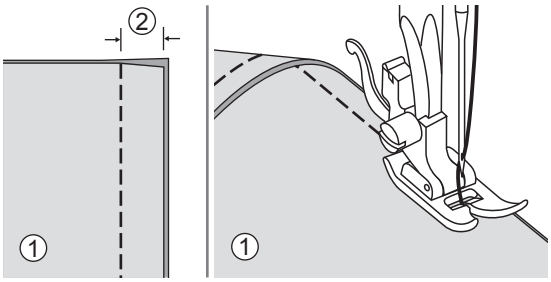

❖ Joining the pieces of the fabric

Place the two pieces of fabric with the right side together and sew with the straight stitch.

Join the pieces of fabric with a seam allowance of 5mm.

Sew with the side of the presser foot aligned with the edge of the fabric.

① Wrong side
② 5mm

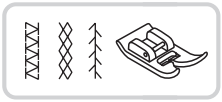

Using the all purpose foot.

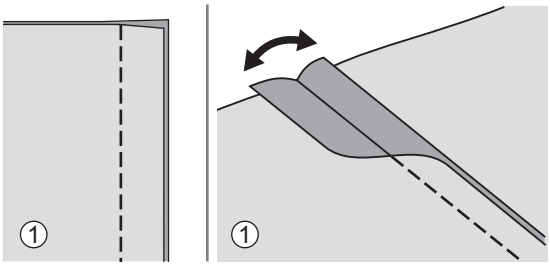

❖ Patchwork stitching

Place the two fabrics, right sides together and sew using a straight stitch.

Open the seam allowance and press it flat.

① Wrong side

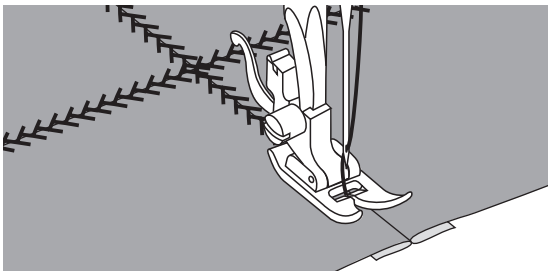

Working on the right side of the fabric, place the center of the presser foot on the seam line of the joined fabrics and stitch over the seam.

Applique

You can create and applique by cutting a different piece of fabric into a shape and using it as a decoration.

Using the all purpose foot.

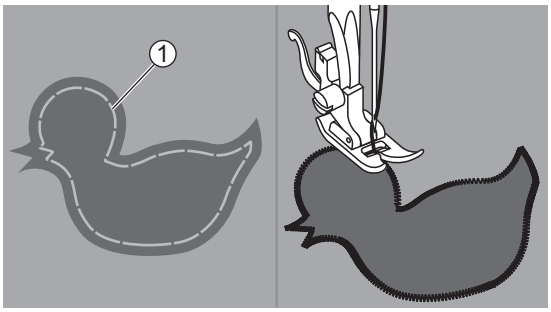

Cut out the applique design and baste it on the fabric. Sew slowly around the edge of the design.

① Basting

Trim the excess material outside the stitching. Make sure not to cut any stitches. Remove the basting.

Fagoting

Stitching across an open seam is called "fagoting". It is used on blouses and children's clothing. This stitch is more decorative when thicker thread is used.

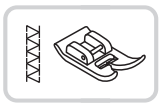

Using the all purpose foot.

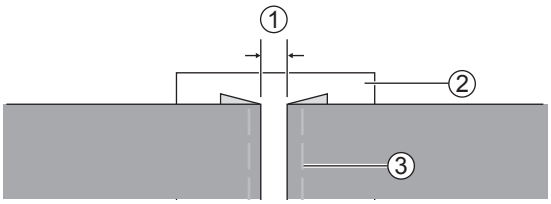

Separate the folded edges of the fabric pieces with a gap of 4mm and baste them onto a piece of thin paper or water-soluble stabilizer sheet.

① 4mm
② Thin paper or water-soluble stabilizer
③ Basting

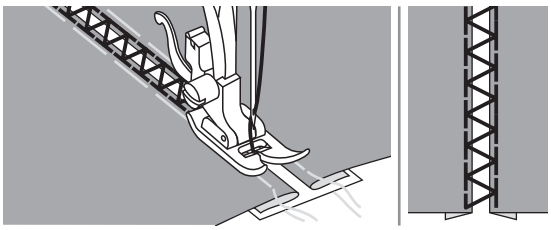

Align the center of the presser foot with the center of the two pieces of fabric and begin sewing.

After sewing, remove the stabilizer and basting.

Scallop stitch

The wave-shaped repeating pattern, that looks like shells, is called "scalloping". It is used to decorate the collar of blouses and the edges of knitting projects.

Using the all purpose foot.

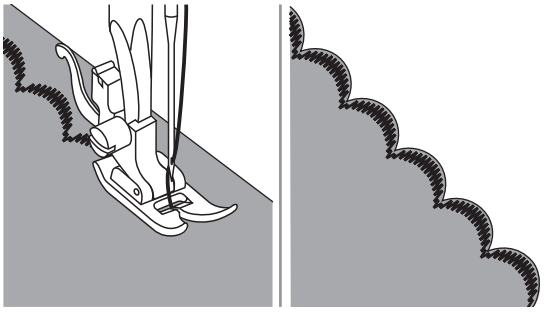

❖ Scallop edging

Stitch along the edge of the fabric, making sure not to sew directly on the edge of the fabric.

For better results, apply spray starch onto the fabric and press with a hot iron before it is sewn.

Trim the fabric close to the stitching taking care not to cut the stitches.

Using the all purpose foot.

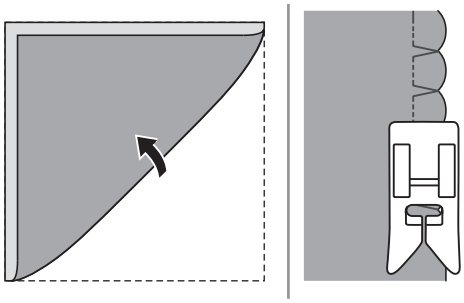

❖ Shell tuck stitching

Use a lightweight fabric (tricot, for example).

Fold the fabric along the bias.

When the needle swings to the right, allow the needle to just clear the folded edge of the fabric.

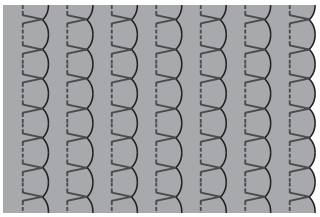

After stitching, open the fabric and iron press the tucks flat to one side.

Maintenance and Trouble shooting

Maintenance

⚠ Attention

Disconnect the power cord from the wall socket before carrying out any maintenance, otherwise injury or electrical shock may result.

❖ Clean the machine surface

If the surface of the sewing machine is dirty, lightly soak a cloth in mild detergent, squeeze it out firmly and then wipe the surface. After cleaning it once in this way, wipe the surface again with a dry cloth.

Do not use any organic solvents or detergents

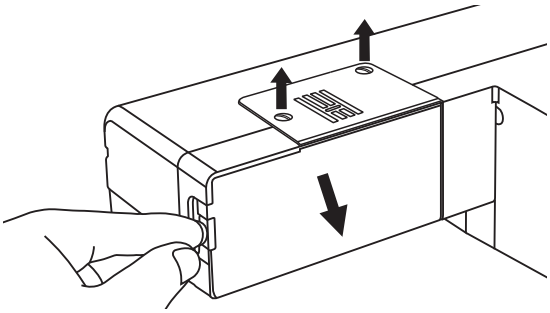

❖ Remove the needle plate

Turn the handwheel until the needle is fully raised. Remove the sewing table, then open the hinged cover. Unscrew the needle plate screw with the screw driver.

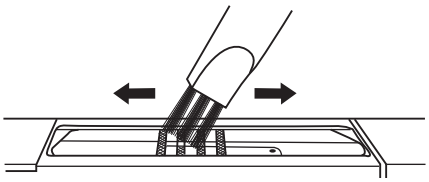

❖ Clean the feed dog

Clean the feed dog and bobbin case with a brush.

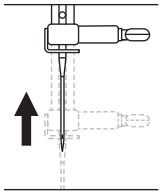

❖ Clean and lubricate the hook

Fabric fluff and threads must be removed regularly. When inserting or removing the bobbin, the needle must be fully raised.

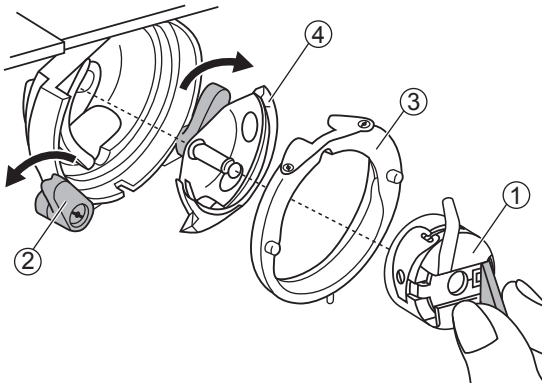

Remove the bobbin case. Snap the two hook retaining arms outwards. Remove the hook race cover and the hook and clean withe a soft cloth.

① Bobbin case
② Hook retaining arms
③ Hook race cover
④ Hook

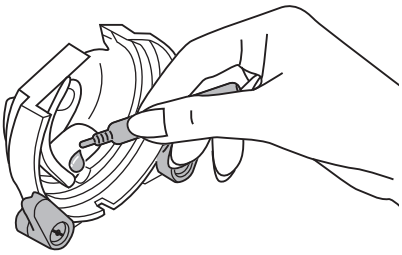

Lubricate at the points (1-2 drops) with sewing machine oil.

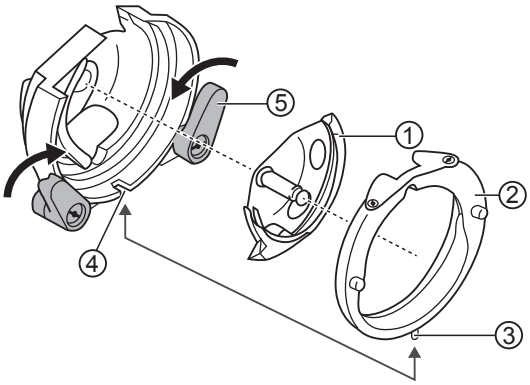

Replace the hook. Attach the hook race cover making sure the bottom pin fits into the notch. Snap back the two hook retaining arms. Insert the bobbin case and bobbin and replace the stitch plate.

① Hook
② Hook race cover
③ Pin
④ Notch
⑤ Hook retaining arms

Trouble shooting guide

Before calling for service, check below trouble shooting guides in advance, if problem still exist, please contact nearest dealer or local service center.

Problem	Cause	Correction	Reference
Upper thread breaks	1. The machine is not threaded correctly.	1. Rethread the upper thread.	11
	2. The thread tension is too tight.	2. Reduce the thread tension (to lower number).	18
	3. The thread is too thick for the needle.	3. Select a larger needle size.	16
	4. The needle is not inserted correctly.	4. Remove and reinsert the needle (flat side towards the back).	15
	5. The thread is wound around the spool holder pin.	5. Remove the reel and wind up the thread onto the reel.	11
	6. The needle is damaged.	6. Insert a new needle.	15
Bobbin thread breaks	1. The bobbin case is not inserted correctly.	1. Remove and reinsert the bobbin case and pull on the thread.	10
	2. The bobbin case is threaded wrong.	2. Check both bobbin and bobbin case if on the correct position.	10
Skipped stitches	1. The needle is not inserted correctly.	1. Remove and reinsert the needle (flat side towards the back).	15
	2. The needle is damaged.	2. Insert a new needle.	15
	3. The wrong size needle has been used.	3. Choose a needle to suit the thread.	16
	4. The presser foot is not attached correctly.	4. Check and attach it correctly.	17
	5. The machine is not threaded correctly.	5. Rethread the upper thread.	11
Needle breaks	1. The needle is damaged.	1. Insert a new needle.	15
	2. The needle is not correctly inserted.	2. Insert the needle correctly (flat side towards the back).	15
	3. Wrong needle size for the fabric.	3. Choose a needle to suit the thread and fabric.	16
	4. The wrong presser foot is attached.	4. Select the correct presser foot.	-
	5. The needle clamp screw is loose.	5. Use the screwdriver to tighten the screw.	15
	6. The presser foot is not appropriate for the type of stitch that you sew.	6. Attach appropriate presser foot for the type of stitch that you sew.	-
	7. The upper thread tension too tight.	7. Loosen the upper thread tension.	18

Problem	Cause	Correction	Reference
Loose stitches	1. The machine is not correctly threaded.	1. Check the threading and rethread.	11
	2. The bobbin case is not threaded correctly.	2. Thread the bobbin case as illustrated.	8
	3. Needle/fabric/thread combination is wrong.	3. The needle size must suit the fabric and thread.	16
	4. The thread tension is wrong.	4. Correct the thread tension.	18
Seam gather or pucker	1. The needle is too thick for the fabric.	1. Select a correct needle size.	16
	2. The stitch length is wrong.	2. Adjust the stitch length.	22
	3. The thread tension is too tight.	3. Loosen the thread tension.	18
Seam puckering	1. The needle thread tension is too tight.	1. Loosen the thread tension.	18
	2. The needle thread is not threaded correctly.	2. Rethread the machine.	11
	3. The needle is too heavy for the fabric being sewn.	3. Choose a needle to suit the thread and fabric.	16
	4. The stitch length is too long for the fabric.	4. Adjust the stitch length shorter.	22
	5. Sewing on thin fabric.	5. Sew with a stabilizer material under the fabric.	26
Patterns are distorted	1. The presser foot is not suited for the pattern.	1. Select the correct foot.	-
	2. The needle thread tension is too tight.	2. Loosen the thread tension.	18
Thread has jammed	1. Thread is caught in the hook.	Remove the upper thread and bobbin case, turn the handwheel backwards and forwards and remove the thread remnants.	46
	2. The feed dogs are packed with lint.		
The machine is noisy	1. Fluff or oil have collected on the hook or needle bar.	1. Clean the hook and feed dog.	47
	2. The needle is damaged.	2. Insert a new needle.	15
	3. Thread is caught in the hook.	Remove the upper thread and bobbin case, turn the handwheel backwards and forwards and remove the thread remands.	46
	4. The feed dogs are packed with lint.		
Uneven stitches, uneven feed	1. Poor quality thread.	1. Select a better quality thread.	16
	2. The bobbin case is threaded uncorrect.	2. Remove the bobbin case and the thread and reinsert them correctly.	8
	3. Fabric has been pulled on.	3. Do not pull on the fabric while sewing, let it be taken up by the machine.	-

Problem	Cause	Correction	Reference
The sewing machine doesn't operate	1. The machine is not turned on.	1. Turn on the machine.	4
	2. The presser foot lifter is raised.	2. Lower the presser foot lifter.	7
	3. The machine is not plugged in.	3. Connect the power cord to the electric outlet.	4

Do not dispose of electrical appliances as unsorted municipal waste, use separate collection facilities.

Contact your local government for information regarding the collection systems available.

If electrical appliances are disposed of in landfills or dumps, hazardous substances can leak into the groundwater and get into the food chain, damaging your health and well-being.

When replacing old appliances with new once, the retailer is legally obligated to take back your old appliance for disposal at least for free of charge.