PFAFF®

ambition™ line

Owner's manual

This household sewing machine is designed to comply with IEC/EN 60335-2-28 and UL1594.

IMPORTANT SAFETY INSTRUCTIONS

When using an electrical appliance, basic safety precautions should always be followed, including the following:

Read all instructions before using this household sewing machine.

DANGER – To reduce the risk of electric shock:

- A sewing machine should never be left unattended when plugged in. Always unplug this sewing machine from the electric outlet immediately after using and before cleaning.

WARNING – To reduce the risk of burns, fire, electric shock, or injury to person:

- This sewing machine is not intended for use by persons (including children) with reduced physical, sensory or mental capabilities, or lack of experience and knowledge, unless they have been given supervision or instruction concerning use of the sewing machine by a person responsible for their safety.
- Children should be supervised to ensure that they do not play with the sewing machine.
- Use this sewing machine only for its intended use as described in this manual. Use only attachments recommended by the manufacturer as contained in this manual.
- Never operate this sewing machine if it has a damaged cord or plug, if it is not working properly, if it has been dropped or damaged, or dropped into water. Return the sewing machine to the nearest authorized dealer or service center for examination, repair, electrical or mechanical adjustment.
- Never operate the sewing machine with any air openings blocked. Keep ventilation openings of the sewing machine and foot controller free from the accumulation of lint, dust, and loose cloth.
- Keep fingers away from all moving parts. Special care is required around the sewing machine needle.
- Always use the proper needle plate. The wrong plate can cause the needle to break.
- Do not use bent needles.
- Do not pull or push fabric while stitching. It may deflect the needle causing it to break.
- Wear safety glasses.
- Switch the sewing machine off (“0”) when making any adjustment in the needle area, such as threading needle, changing needle, threading bobbin, or changing presser foot, etc.
- Always unplug sewing machine from the electrical outlet when removing covers, lubricating, or when making any other user servicing adjustments mentioned in the instruction manual.
- Never drop or insert any object into any opening.
- Do not use outdoors.
- Do not operate where aerosol (spray) products are being used or where oxygen is being administrated.
- To disconnect, turn all controls to the off (“0”) position, then remove plug from outlet.
- Do not unplug by pulling on cord. To unplug, grasp the plug, not the cord.
- The sound pressure level under normal operating conditions is 75dB(A)
- This sewing machine is provided with double insulation. Use only identical replacement parts. See instructions for Servicing of Double-Insulated Appliances.

SAVE THESE INSTRUCTIONS

SERVICING OF DOUBLE INSULATED PRODUCTS

In a double-insulated product, two systems of insulation are provided instead of grounding. No ground means is provided on a double-insulated product, nor should a means for grounding be added to the product. Servicing of a double-insulated product requires extreme care and knowledge of the system and should be done only by qualified service personnel. Replacement parts for a double-insulated product must be identical to those parts in the product. A double-insulated product is marked with the words ‘DOUBLE INSULATION’ or ‘DOUBLE INSULATED’.

Congratulations!

Congratulations on purchasing your new PFAFF® sewing machine. As a sewing enthusiast, you have acquired a machine that features the very latest in both design and technology, enabling you to transform your creative ideas into reality.

Before you start, please spend some time reading this owner's manual. You will soon discover how to maximize the use of your machine. Our authorized PFAFF® dealer will of course also be pleased to advise you as well.

Your PFAFF® ambition™ sewing machine will definitely enable you to experience a totally new dimension of sewing!

Note: The machine models will be referred to as their full name or simply as 1.5 and 1.0 in this manual.

Table of contents

Introduction 1:4

Machine overview 1:4
Accessories 1:6
Stitch overview 1:7
Alphabets 1:10

Preparations 2:1

Unpacking 2:1
Connect to the power supply 2:1
Pack away after sewing 2:1
Free arm 2:2
Leveling the machine base plate 2:2
Mounting machine in sewing cabinet 2:2
Thread cutter 2:2
Spool pins 2:2
Threading the machine 2:3
- Needle threader 2:4
- Threading for twin needle 2:4

Bobbin winding 2:5
Inserting the bobbin 2:6
IDT™ (integrated dual feed) 2:6
Presser foot pressure 2:7
Thread tension 2:7
Needles 2:8
Changing the needle 2:9
Lowering feed dogs 2:9
Presser foot lift 2:9
Changing the presser foot 2:9
Buttons for ambition™ 1.5 machine 2:10
Touch screen for ambition™ 1.5 machine 2:11
Buttons for ambition™ 1.0 machine 2:12
Graphic Display on ambition™ 1.0 machine 2:13
Settings 2:14

Sewing 3:1

Sewing mode - overview (1.5) 3:1
- Select a stitch 3:1

Sewing mode - overview (1.0) 3:2
- Select a stitch 3:2

Stitch information 3:2
Stitch adjustments 3:3
Tie-off options 3:5
Save personal stitch 3:6
Load personal stitch 3:6
Sewing techniques 3:7
- Three-step zigzag stitch 3:7
- Buttonholes 3:7
- Sew on a button 3:8
- Darning and mending 3:9
- Sewing hems in heavy fabric 3:9
- Quilting 3:10
- Blindhem 3:11
- Sewing in zippers 3:11

Common sewing pop-ups 3:12

Sequencing 4:1

Overview 4:1
Create a sequence 4:1
- Using the alphabet 4:2-4:3
- Adjust stitches 4:4
- Delete stitches or letters in a sequence 4:4
- Combining text with decorative stitches 4:5

Manage your sequences 4:5
- Save sequence 4:5
- Load sequence 4:6

Sewing a sequence 4:6

Maintenance 5:1

Cleaning the machine 5:1
Replacing the stitch plate 5:1
Troubleshooting 5:2

Introduction

Machine overview

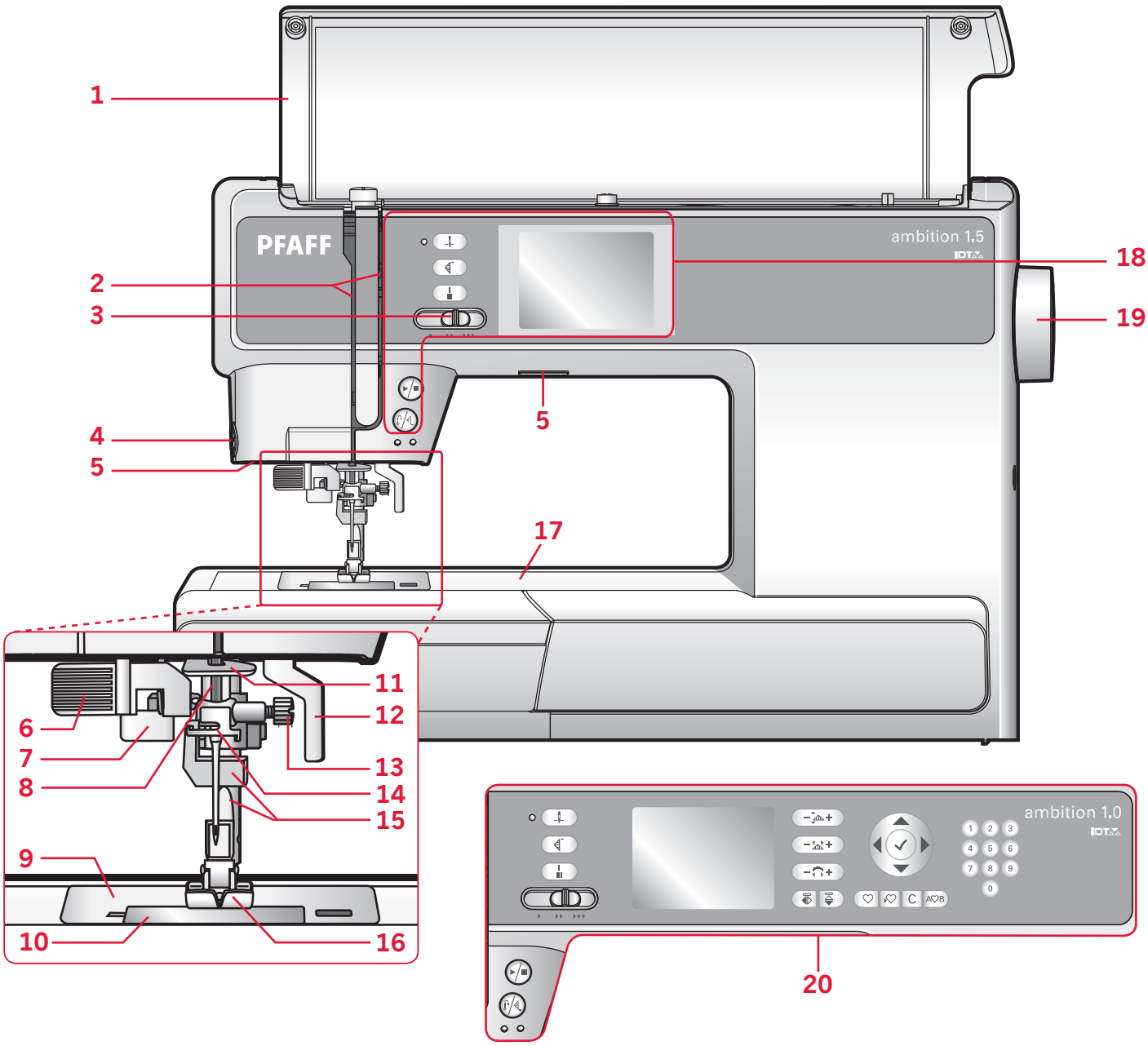

Front side

1. Lid with stitch overview
2. Threading slots
3. Speed control slide
4. Thread cutter
5. LED lights
6. Built-in needle threader
7. Buttonhole lever
8. Needle bar
9. Stitch plate
10. Bobbin cover
11. Lower thread guide
12. Presser foot lift
13. Needle screw
14. Needle thread guide
15. Presser foot bar and presser foot holder
16. Presser foot
17. Free arm
18. Buttons and touch screen (ambition™ 1.5)
19. Handwheel
20. Buttons and graphic display (ambition™ 1.0)

Top parts

21. Presser foot pressure dial
22. Thread guides
23. Spool caps
24. Hole for auxiliary spool pin
25. Bobbin winder lever and bobbin spindle
26. Take-up lever
27. Thread tension discs
28. Thread tension dial
29. Bobbin winder tension disc
30. Stylus (ambition™ 1.5)
31. Bobbin thread cutter

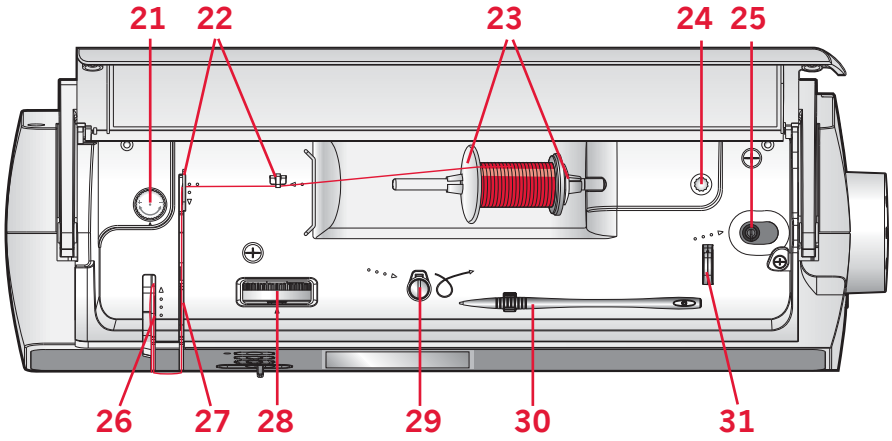

Rear side

32. Main switch, connectors for power cord and foot control
33. Handle
34. Presser foot lift
35. IDT™
36. Slide for lowering the feed dogs

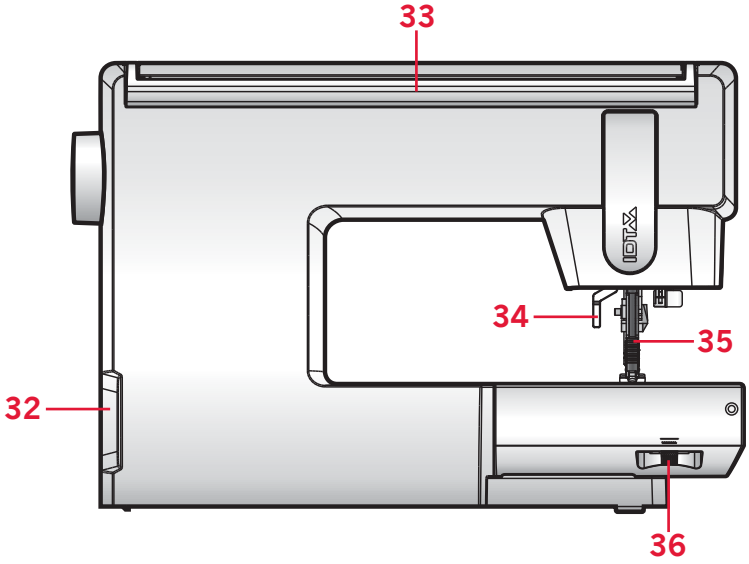

Accessory tray

The accessory tray features special compartments for presser feet and bobbins, plus space for needles and other accessories. Store the accessories in the tray so they are easily accessible.

37. Space for accessories
38. Removable tray for presser feet
39. Removable bobbin holder

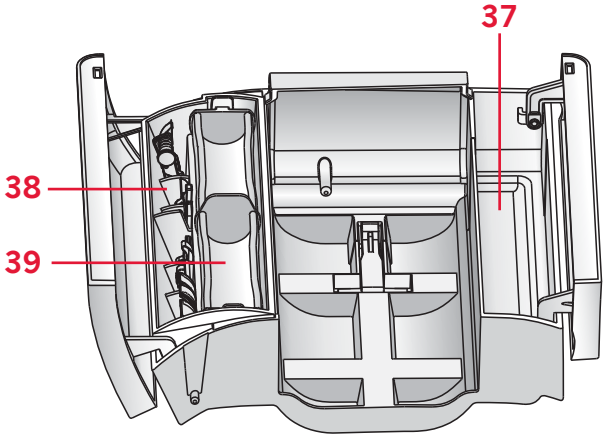

Accessories

Included accessories

40. Bobbins (5) (#416475801)
41. Felt pad
42. Screwdriver for needle plate
43. Multi-purpose tool
44. Spool cap, large (2)
45. Spool cap, small
46. Seam ripper & brush (as one)
47. Stylus (ambition™ 1.5)
48. Edge guide
49. Auxiliary spool pin

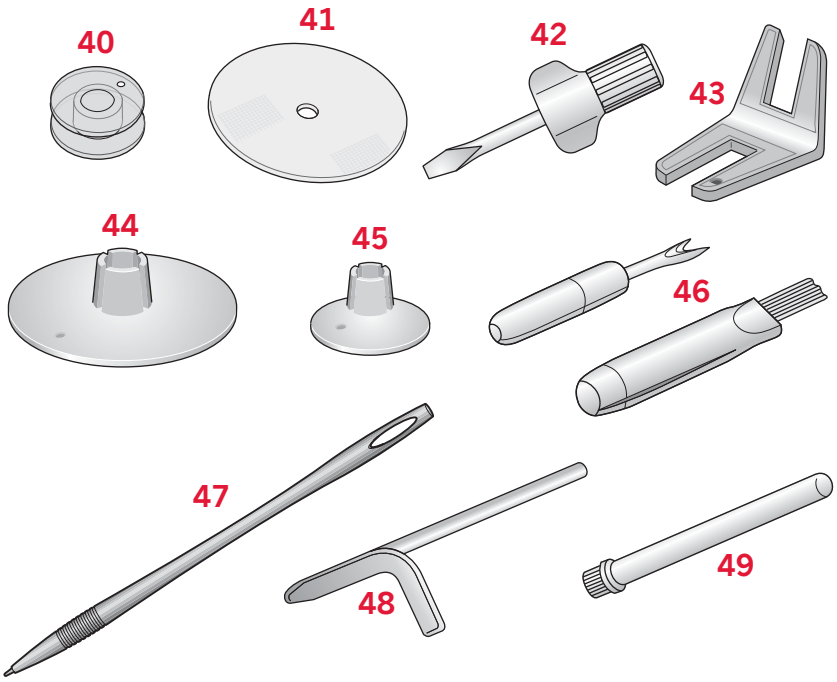

Included accessories not in picture

- Foot control
- Power cord
- Needles
- Hard cover

Presser feet

	Standard presser foot 0A with IDT™ system (attached on the machine upon delivery) This foot is used mainly for straight stitching and zigzag stitching with a stitch length longer than 1.0 mm.
	Fancy stitch foot 1A with IDT™ system This foot is used for decorative stitches. The groove on the underside of the foot is designed to flow smoothly over the stitches.
	Fancy stitch foot 2A When sewing decorative stitches or short zigzag stitches and other utility stitches with less than 1.0mm stitch length, use this foot. The groove on the underside of the foot is designed to flow smoothly over the stitches.
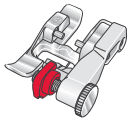	**Blindhem foot 3 with IDT™ system** This foot is used for blindhem stitches. The toe on the foot guides the fabric. The red guide on the foot is designed to ride along the fold of the hem edge.
	Zipper foot 4 with IDT™ system This foot can be snapped on either the right or the left of the needle, making it easy to sew close to both sides of the zipper teeth. Move the needle position to the right or left to sew closer to zipper teeth.
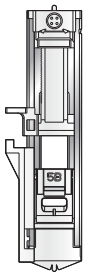	**One step Buttonhole foot 5B** This foot has a space in the back to set the size of the buttonhole. The machine will sew a buttonhole to fit that button size.

Important: Make sure that the IDT™ system is disengaged when using presser foot 2A, 5B.

Stitch overview

Utility stitches

Stitch	Number 1.5	Number 1.0	Name	Description
	1	1	Straight stitch	For seaming and topstitching. Select from 29 different needle positions. *Note: This stitch makes a stronger tie-off than stitch 46 (35 for 1.0).*
	2	2	Stretch triple straight stitch	Reinforced seam. Topstitching.
	3	3	Straight stitch reverse	Sew continuous reverse.
	4	–	Basting stitch	Single stitch used for basting. Touch foot control to sew one stitch. Move fabric manually to desired position and touch foot control again to sew another stitch.
	5	4	Zigzag stitch	Reinforce seams, clean finish, stretch sewing, lace insertion.
	6	5	Zigzag stitch	Reinforce seams, clean finish, stretch sewing.
	7	6	Z-zigzag stitch	Appliqué, couching, eyelets.
	8	7	Stretch triple zigzag stitch	Elastic stitch for decorative hems or topstitching.
	9	8	Three-step zigzag stitch	Sewing elastic, darning, patching.
	10	9	Elastic stitch	Sewing elastic, darning, patching.
	11	–	Triple stretch stitch	Sewing elastic, darning, patching and decorative sewing.
	12	10	Honeycomb stitch	Decorative stitch for stretch fabrics and hems. Also used with elastic thread in the bobbin.
	13	11	Bridging stitch	Joining fabrics and quilt batting, decorative stitch for quilting, hemstitching.
	14	12	Foundation elastic stitch	Joining stitch for undergarments, terry cloth, leather, bulky fabrics where overlapping the seams.
	15	13	Crosshem stitch	Elastic decorative hem for stretch fabrics.
	16	14	Blindhem stitch	Sewing blindhems on woven fabrics.
	17	15	Elastic blindhem stitch	Sewing blindhems on stretch fabrics.
	18	16	Stretch tricot stitch	Sewing seams on stretch fabrics.
	19	17	Closed overlock	Seam and overcast stretch fabrics in one step.
	20	–	Closed overlock	Seam and overcast in one step.
	21	18	Closed overlock	Seam and overcast in one step with reinforced edge.
	22	–	Elastic overcast	Seam and overcast stretch fabrics in one step.
	23	19	Standard overcast	Seam and overcast stretch fabrics in one step with reinforced edge.

Stitch	Number		Name	Description
	1.5	1.0		
	24	–	Overlock	Seam and overcast in one step, patch, hem.
	25	20	Closed overlock	Seam and overcast stretch fabrics in one step.
	26	–	Stretch knit overlock	Seam and overcast stretch fabrics in one step.
	27	–	Reinforced overlock	Seam and overcast stretch fabrics in one step and reinforce.
	28	–	Finished edge overlock	Seam and overcast stretch fabrics in one step with reinforced edge.
	29	–	Mock cover hem	Create the look of a serger cover hem for stretch fabrics.
	30	–	Open overlock blindhem	Create decorative overlock blindhem for woven fabrics.
	31	21	Closed overlock blind hem	Create decorative overlock blindhem for stretch fabrics.
	32	22	Linen buttonhole	Buttonhole for blouses, shirts and linen.
	33	23	Standard buttonhole	Basic buttonhole for blouses, shirts and jackets. Also for pillowcases.
	34	24	Rounded buttonhole with lengthwise tack	Buttonhole for garments.
	35	25	Eyelet buttonhole with pointed tack	Tailors buttonhole or decorative buttonhole.
	36	26	Eyelet buttonhole with lengthwise tack	Tailors buttonhole for jackets and trousers.
	37	27	Rounded buttonhole	Buttonhole for light garments or jackets.
	38	28	Stretch buttonhole	Buttonhole for stretch fabrics.
	39	29	Button sewing	Sew on buttons or tacking.
	40	30	Eyelet	Heirloom sewing decorative trim.
	41	31	Programmable darning stitch	Darning holes or damaged fabric.
	42	32	Programmable reinforced darning stitch	Reinforced darning holes or damaged fabric.
	43	33	Bartack	Automatically reinforce seams and pockets.
	44	34	Denim bartack	Automatically reinforce seams and pockets decoratively.
	45	–	Decorative bartack	Automatically reinforce seams and pockets decoratively.

Quilt stitches

Stitch																							
1.5	46	47	48	49	50	51	52	53	54	55	56	57	58	59	60	61	62	63	64	65	66	67	68
1.0	35	-	36	37	38	-	39	-	40	-	41	42	43	44	45	-	46	47	48	-	49	-	-

Stitch															
1.5	69	70	71	72	73	74	75	76	77	78	79	80	81	82	83
1.0	50	51	52	-	53	54	55	-	56	57	58	59	60	61	-

Needle art stitches

Stitch																							
1.5	84	85	86	87	88	89	90	91	92	93	94	95	96	97	98	99	100	101	102	103	104	105	106
1.0	62	-	-	63	64	65	66	67	68	69	70	-	71	-	72	73	-	74	75	-	-	76	77

Stitch						
1.5	107	108	109	110	111	112
1.0	-	78	79	-	-	-

Satin stitches

Stitch																							
1.5	113	114	115	116	117	118	119	120	121	122	123	124	125	126	127	128	129	130	131	132	133	134	135
1.0	80	81	-	82	-	83	84	-	85	86	-	87	-	88	89	90	91	-	92	93	94	-	95

Decorative stitches

Stitch																							
1.5	136	137	138	139	140	141	142	143	144	145	146	147	148	149	150	151	152	153	154	155	156	157	158
1.0	-	96	-	97	98	-	-	99	100	101	102	-	-	103	104	105	106	107	-	108	-	-	109

Stitch																							
1.5	159	160	161	162	163	164	165	166	167	168	169	170	171	172	173	174	175	176	177	178	179	180	181
1.0	110	111	-	112	-	-	113	114	115	116	-	-	117	118	119	-	120	121	122	123	124	144	125

Stitch								
1.5	182	183	184	185	186	187	188	189
1.0	126	-	127	-	128	129	-	130

Sewing techniques stitches

Stitch						
1.5	190	191	192	193	194	195
1.0	131	132	133	134	135	136

Alphabets

A/a Block letters

ABCDEFGHIJKLMNOPQRSTUVWXYZ
abcdefghijklmnopqrstuvwxyz
ÅÄÆÑÜÖØÇĞİŞåäàáæçëèéêíñóüö
øúùßğış0123456789&?¡¿,.@-_
\¦¦_ŒÉ€$§¿âãìÏîòôõœûÇ%/+=°
*^ˇ~ˋ¨¨´

A Outline letters (ambition™ 1.5)

ABCDEFGHIJKLMNOPQRSTUVWXYZ
0123456789.,:-_&?!ÅÄÆÖØŒÜÉÑßÇĞİŞ

A Script letters (ambition™ 1.5)

ABCDEFGHIJKLMNOPQRST
UVWXYZ0123456789.,:;+=%/*"&
?!-_ÅÄÆÖØŒÜÉÑßÇĞİŞ

Б Cyrillic letters

АБВГДЕЁЖЗИЙКЛМНОПРСТУФХЦЧ
ШЩЪЫЬЭЮЯ1234567890&?!,._\/©
§$€%:;`'*=-+

Preparations

Unpacking

1. Place the box on a steady, flat surface. Lift the machine out of the box, remove the outer packaging and lift off the machine carrying case.
2. Remove all outer packing material and the plastic bag.

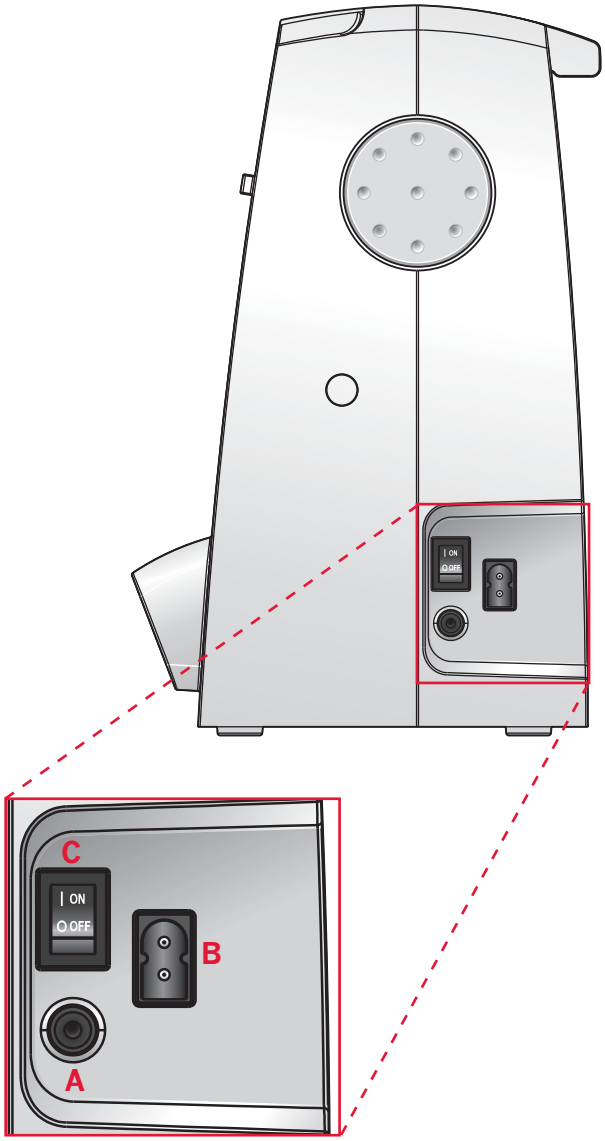

Connect to the power supply

Among the accessories you will find the power cord and the foot control.

Note: Consult a qualified electrician if in doubt as how to connect the machine to the power source. Unplug the power cord when the machine is not in use.

For this sewing machine, foot control model C-9002 manufactured by CHIENHUNG TAIWAN., LTD must be used.

1. Connect the foot control cord to the front socket on the bottom right side of the machine (A).
2. Connect the power cord to the rear socket on the bottom right side of the machine (B). Plug the cord into the wall socket.
3. Press the ON/OFF switch to ON to turn on power and light (C).

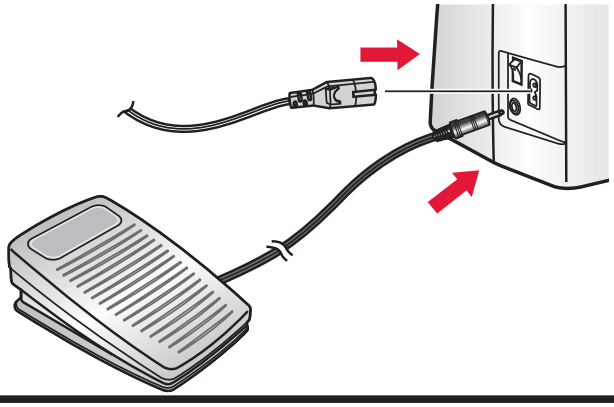

Pack away after sewing

1. Switch the main switch off.
2. Unplug the cord from the wall socket and then from the machine.
3. Unplug the foot control cord from the machine. Wind the cord around the foot control for easy storage.
4. Place all accessories in the accessory tray. Slide the tray on to the machine around the free arm.
5. Place the foot control in the space above the free arm.
6. Put on the hard cover.

For the USA and Canada

This sewing machine has a polarized plug (one blade wider than the other). To reduce the risk of electric shock, this plug is intended to fit in a polarized outlet only one way. If the plug does not fit fully in the outlet, reverse the plug. If it still does not fit, contact a qualified electrician to install the proper outlet. Do not modify the plug in any way.

Free arm

To use the free arm, slide off the accessory tray. When attached, a hook keeps the accessory tray securely attached to the machine. Remove the tray by sliding it to the left.

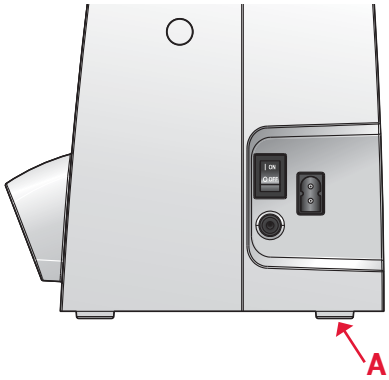

Leveling the machine base plate

To make sure your machine stands steadily on your sewing surface you can adjust the base plate height. Turn the base plate adjusting screw (A) by hand. Turn clockwise to lower and counter-clockwise to raise the base plate.

Mounting machine in sewing cabinet

There are two holes on the underside of the machine designed for mounting the machine into a sewing cabinet. Align the holes (indicated in the picture) with the corresponding holes in the cabinet base. Attach the machine with screws.

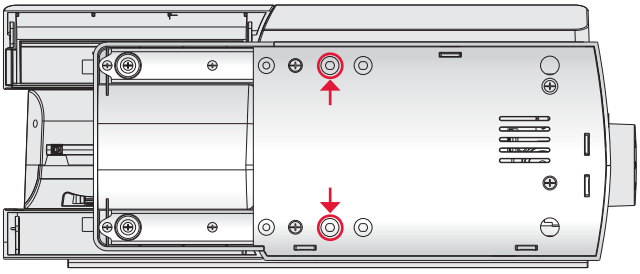

Thread cutter

To use the thread cutter, pull the thread from back to front as shown (B).

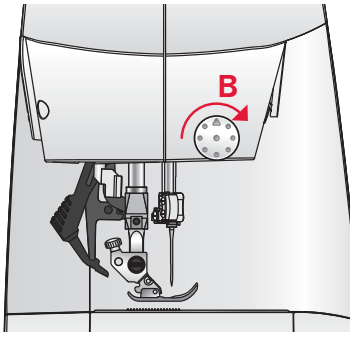

Spool pins

Your machine has two spool pins, a main spool pin and an auxiliary spool pin. The spool pins are designed for many types of thread. The main spool pin is adjustable and can be used both in a horizontal position (the thread reels off the spool) and a vertical position (the thread spool rotates). The horizontal position can be used for most sewing and embroidery threads, and the vertical position can be used for many specialty threads.

Horizontal position

Place a spool cap and the thread spool on the spool pin. Make sure that the thread reels over the top and slide on the second spool cap.

Use a spool cap slightly larger than the thread spool. For narrow thread spools, use a smaller spool cap in front of the spool. For large thread spools, use a larger spool cap in front of the spool.

The flat side of the spool cap should be pressed firmly against the spool. There should be no space between the spool cap and the thread spool.

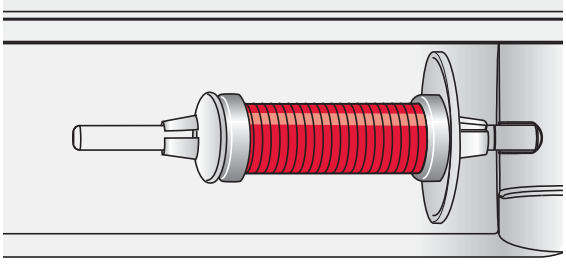

Small spool cap

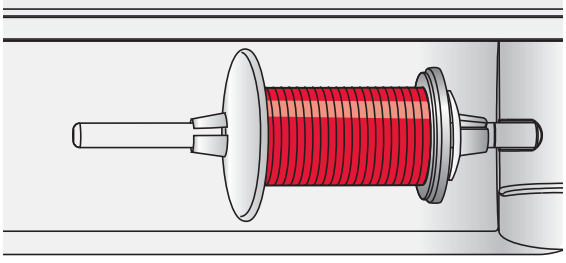

Large spool cap

Vertical position

Raise the spool pin to the vertical position. Slide on the large spool cap and place a felt pad under the thread spool. This is to prevent the thread from reeling off too fast.

Do not place a spool cap on top of the spool pin as that would prevent the spool from rotating.

Auxiliary spool pin

The auxiliary spool pin is used when winding a bobbin thread from a second spool of thread or for a second spool when sewing with a twin needle.

Insert the auxiliary spool pin into the hole at the top of the machine (A). Slide on a large spool cap and place a felt pad under the thread spool.

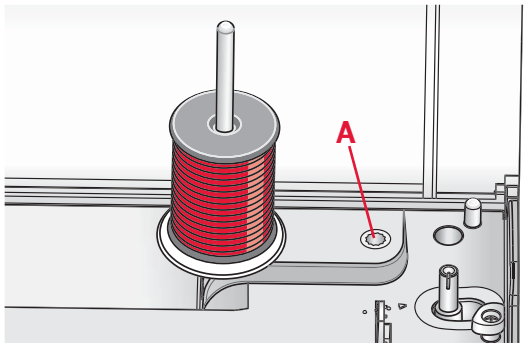

Main spool pin in vertical position.

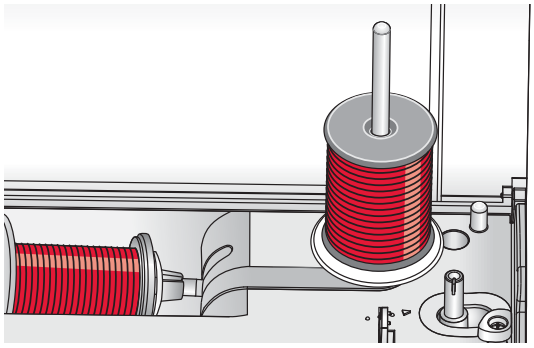

Auxiliary spool pin.

Threading the machine

Make sure that the presser foot is raised and the needle is in its highest position.

1. Place the thread on the spool pin and fit the appropriately sized spool cap.
2. Pull the thread into the thread guides (B) from back to front. Pull the thread between the tension discs (C).
3. Thread down through the right-hand threading slot and then upwards through the left-hand threading slot.
4. Bring the thread from the right into the take-up lever (D) and down in the left-hand threading slot, into the lower thread guide (E) and to the needle thread guide (F).
5. Thread the needle.

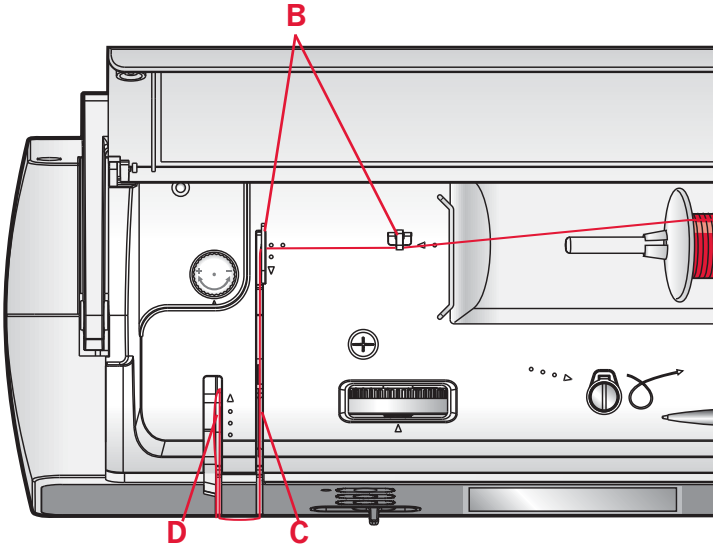

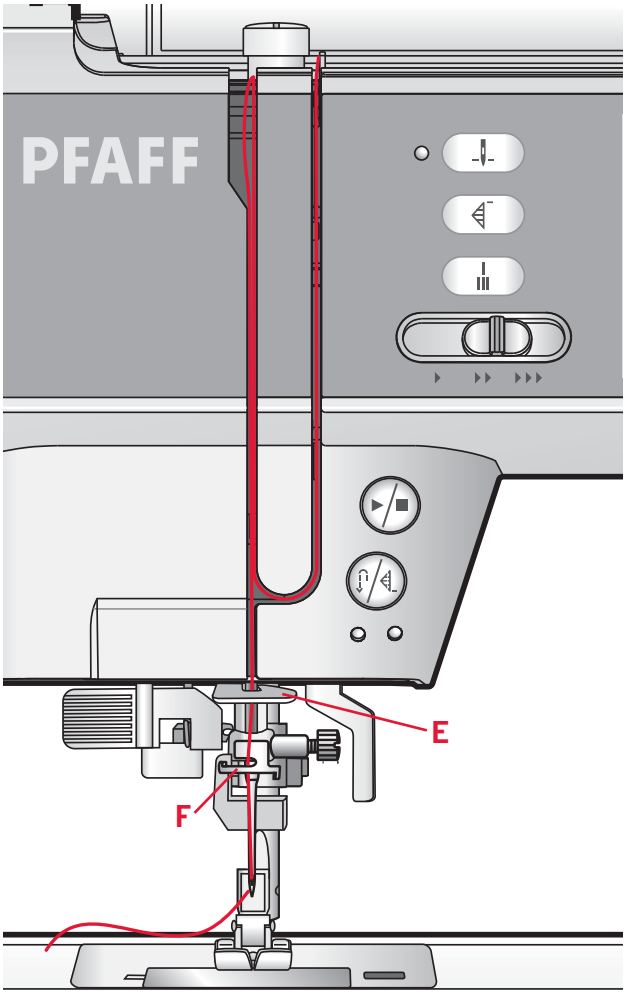

Needle threader

The needle threader allows you to thread the needle automatically. The needle must be in its highest position to use the built-in needle threader. Press the needle up/down button to make sure the needle is fully raised.

We also recommend lowering the presser foot.

1. Use the handle to pull the needle threader all the way down. The threader hook (F) swivels through the needle eye.
2. Place the thread from the back over the hook (G) and under the thread hook (F).
3. Let the needle threader gently swing back. The hook pulls the thread through the needle eye and forms a loop behind the needle. Pull the thread loop out behind the needle.

Note: The needle threader is designed to be used for size 70-120 needles. You cannot use the needle threader for size 60 needles or smaller, wing needles or twin needles. There are also some optional accessories that require manual threading of the needle.

When threading the needle manually, make sure that the needle is threaded from front to back.

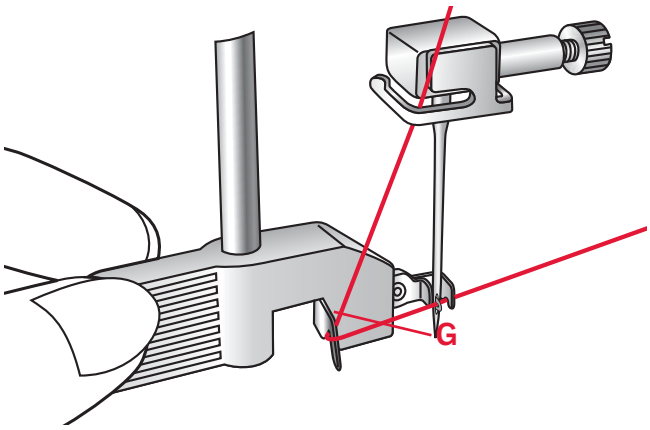

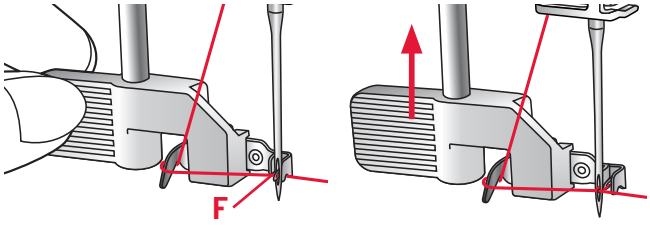

Threading for twin needle

Replace the sewing needle with a twin needle. Make sure that the presser foot is raised and the needle is in its highest position.

1. Place the thread on the spool pin and fit the appropriately sized spool cap. Insert the auxiliary spool pin. Slide on a large spool cap and a felt pad. Place the second thread on the spool pin.
2. Pull the threads into the thread guides (A) from back to front. Pull both threads between the tension discs (B).
3. Thread down through the right-hand threading slot and then upwards through the left-hand threading slot.
4. Bring the threads from the right into the take-up lever (C) and down in the left-hand threading slot. Place the threads into the lower thread guide (D). Place one thread into the slot on the left side of the needle thread guide (E) and the other thread into the slot on the right side of the needle thread guide (F). Make sure that the threads do not become twisted together.
5. Thread the needles.

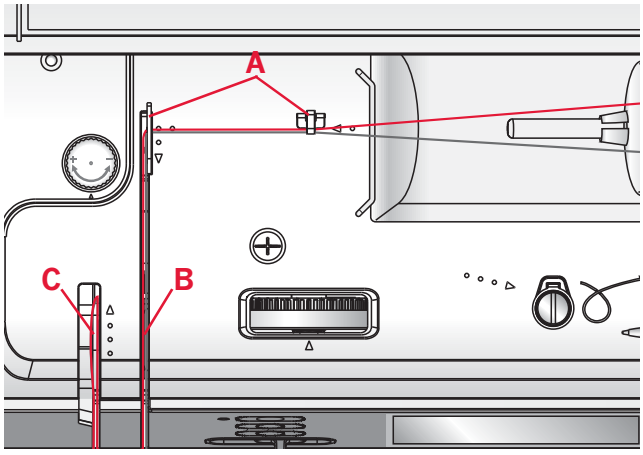

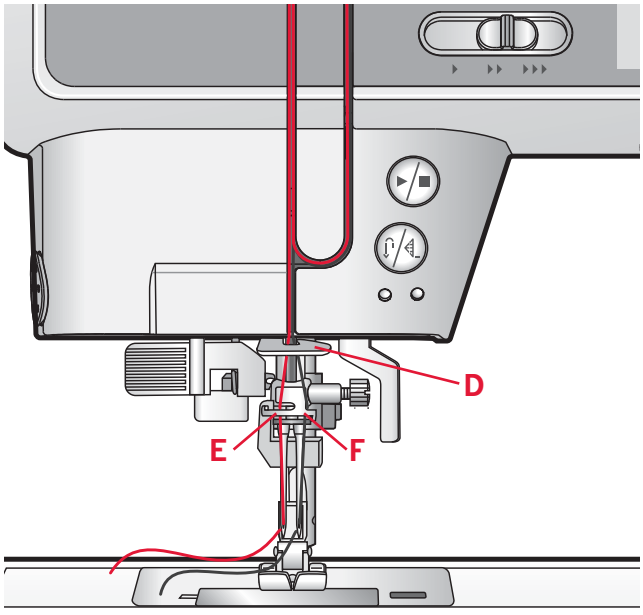

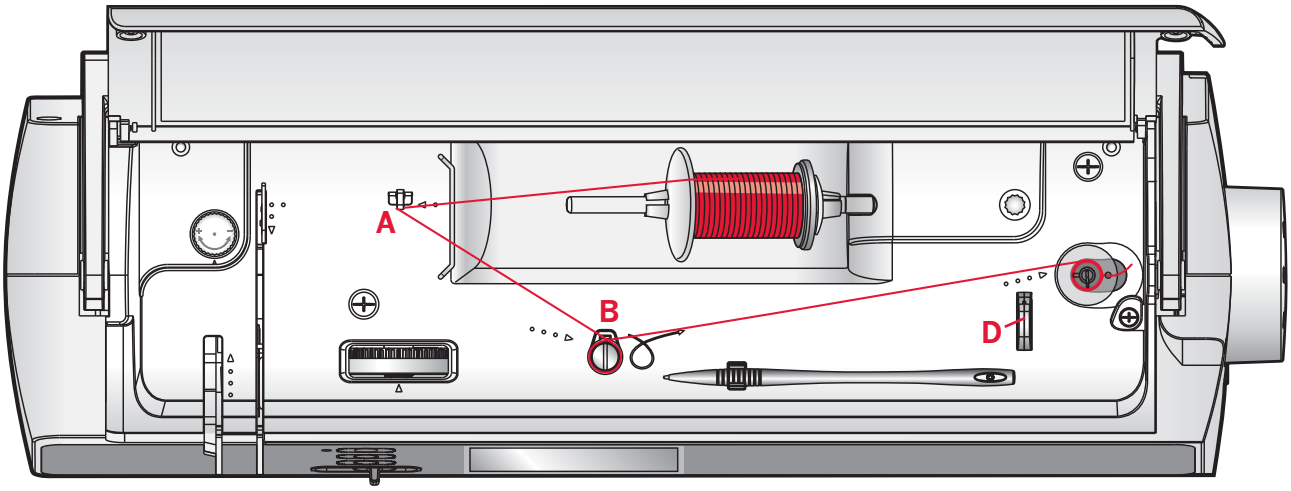

Bobbin winding

1. Place the thread spool on the spool pin in horizontal position. Slide a spool cap tightly against the spool.
2. Place the thread into the thread guide (A) from back to front. Pull the thread clockwise around the bobbin winder tension disc (B).
3. Thread through the hole in the bobbin (C) from the inside to the outside.
4. Place an empty bobbin on the bobbin spindle.
5. Push the bobbin lever to the right to wind. A pop-up appears on the screen to inform you that bobbin winding is on. Press the foot control or the start/stop button to start winding the bobbin.

   When the bobbin is full, the bobbin winding will slow down and stop automatically. The pop-up closes. Remove the bobbin and cut the thread using the bobbin thread cutter (D).

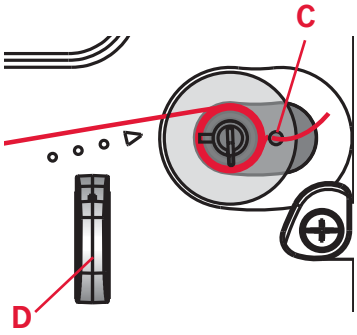

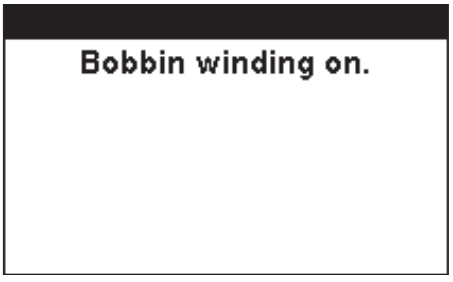

Inserting the bobbin

Make sure that the needle is fully raised and the machine is turned off before inserting or removing the bobbin. Open the bobbin cover by pushing the release button to the right (A). Remove the cover (B).

1. Insert the bobbin in the bobbin case with the thread running in a counterclockwise direction.
2. Pull the thread through the slit (C).
3. With a finger held gently on top of the bobbin, draw the thread at the arrow markings into the stitch plate thread guide from (C) to (D).
4. Pull the thread at the arrow markings into the stitch plate thread guide from (D) to (E).
5. To cut off excess thread pull thread back over the cutting off blade at point (E).
6. Replace the bobbin cover.

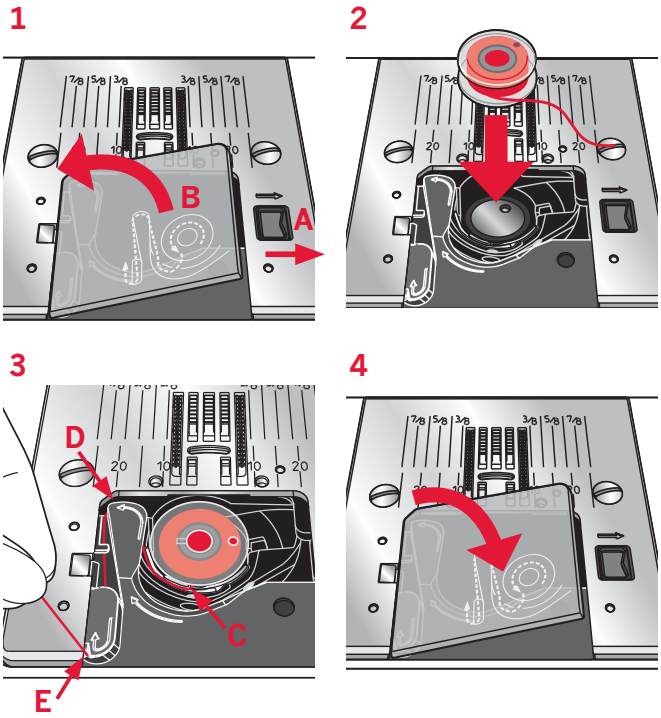

IDT™ system (integrated dual feed)

For sewing any fabric precisely, PFAFF® ambition™ sewing machine provides the ideal solution: the integrated dual feed, IDT™ system. As on industrial machines, the IDT™ system feeds the fabric from the top and bottom at the same time. The fabrics are fed precisely. On light fabrics such as silk or rayon the dual feed prevents puckering of the seam. The even feeding action also ensures perfect matching of checked and striped fabrics. The IDT™ system keeps all layers of quilt projects aligned to prevent shifting of the layers.

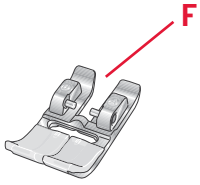

Engaging the IDT™

Important: For all work with the IDT™, use presser feet with the center back cut-out (F).

Raise the presser foot. Press the IDT™ system down until it engages.

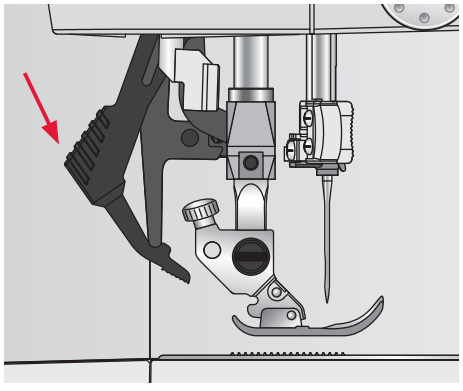

Disengaging the IDT™

Raise the presser foot. Hold the IDT™ with two fingers at the ribbed ankle. Pull the IDT™ down, then pull it away from you to release the IDT™ slowly upward.

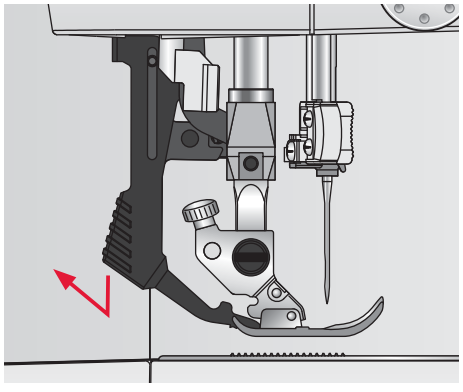

Presser foot pressure

The presser foot pressure has been pre-set to the standard value "N". In most cases, you do not need to adjust the presser foot pressure. When using specialty techniques, or when sewing on very light or heavy fabric, adjusting the pressure can improve the result.

For very light fabrics, loosen the pressure by turning the dial counterclockwise.

Note: If the dial is turned counterclockwise too much, it could come off. If this happens, simply replace the dial and turn it clockwise until it stays in place.

For heavy fabric, tighten the pressure by turning the dial clockwise.

Note: If the dial is turned clockwise until it comes to a stop, it has reached the maximum pressure available. Do not try to turn the dial any further!

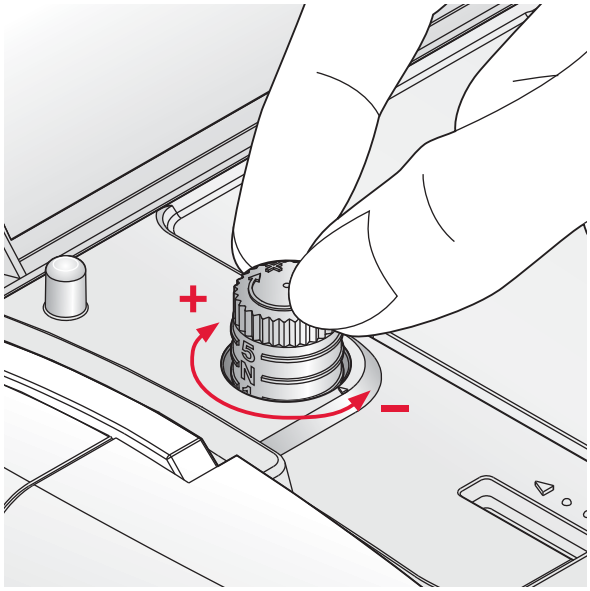

Thread tension

To set the thread tension, turn the dial on top of the machine. Use the recommended thread tension setting given on the screen, see page 3:4. Depending on the fabric, batting, thread, etc, the tension may need to be adjusted.

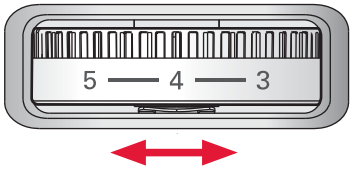

For the best stitch appearance and durability, make sure the needle thread tension is correctly adjusted. For general sewing, the threads evenly meet between the two layers of fabric.

If the bobbin thread is visible on the top side of the fabric, the needle thread tension is too tight. Reduce the needle thread tension.

If top thread is visible on the underside of the fabric, the needle thread tension is too loose. Increase the needle thread tension.

For decorative stitches and buttonholes, the top thread should be visible on the underside of the fabric.

Make a few tests on a scrap piece of the fabric you are going to sew and check the tension.

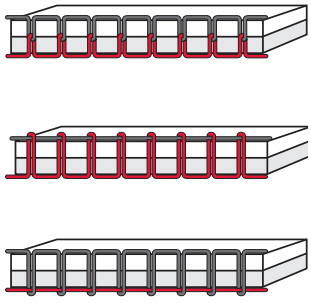

Needles

The sewing machine needle plays an important role in successful sewing. Use only quality needles. We recommend needles of system 130/705H. The needle package included with your machine contains needles of the most frequently used sizes.

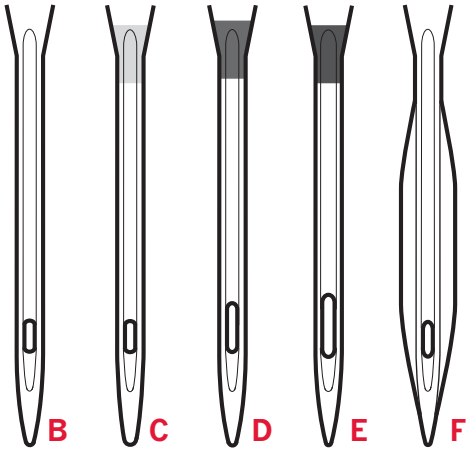

Universal needle (B)

Universal needles have a slightly rounded point and come in a variety of sizes. For general sewing in a variety of fabric types and weights.

Stretch needle (C)

Stretch needles have a special scarf to eliminate skipped stitches when there is a flex in the fabric. For knits, swimwear, fleece, synthetic suedes and leathers. Marked with a yellow band.

Embroidery needle (D)

Embroidery needles have a special scarf, a slightly rounded point and a slightly larger eye to avoid damage to thread and materials. Use with metallic and other specialty threads for embroidery and decorative sewing. Marked with a red band.

Denim needle (E)

Denim needles have a sharp point to penetrate tightly woven fabrics without deflecting the needle. For canvas, denim, microfibers. Marked with a blue band.

Wing needles (F)

The Wing needle has wide wings on the side of the needle to poke holes in the fabric when sewing entredeux and other hemstitches on natural fiber fabrics. Decrease the stitch width for best results.

Note: Change the needle often. Always use a straight needle with a sharp point (G).

A damaged needle (H) can cause skipped stitches, breakage or snapping of the thread. A damaged needle can also damage the stitch plate.

Do not use asymmetrical twin needles (I), since it may damage your sewing machine.

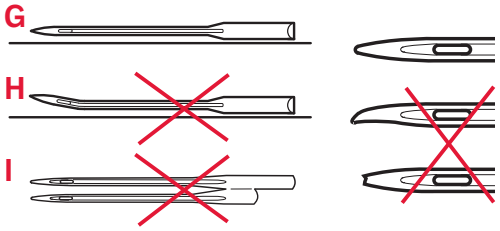

Changing the needle

1. Use the hole in the multi-purpose tool to hold the needle.
2. Loosen the needle screw. Use the screwdriver if necessary.
3. Remove the needle.
4. Insert the new needle, using the multi-purpose tool. Push the new needle upwards with the flat side away from you until it will go no further.
5. Tighten the needle screw as tight as it will go.

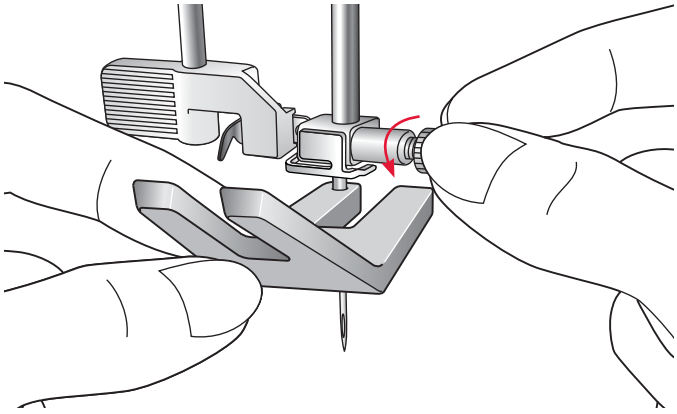

Lowering feed dogs

You can lower the feed dogs by moving the switch at the back of the free arm to the left. Move the switch to the right if you wish to raise the feed dogs.

Note: The feed dogs will not raise immediately when the lever is switched. Turn the handwheel one full turn or start sewing to re-engage the feed dogs.

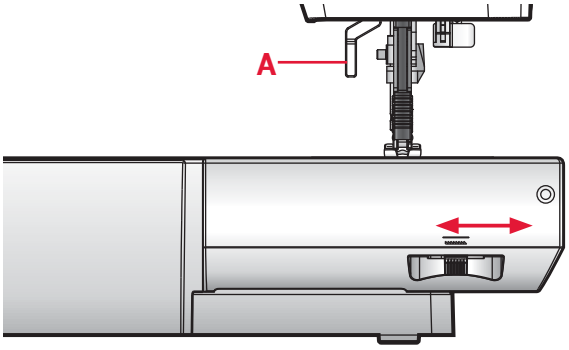

Presser foot lift

The presser foot is lowered or raised with the presser foot lift (A). If you are sewing on heavy fabric or several layers of fabric, the presser foot can be raised higher to make it easier to place the fabric underneath the presser foot.

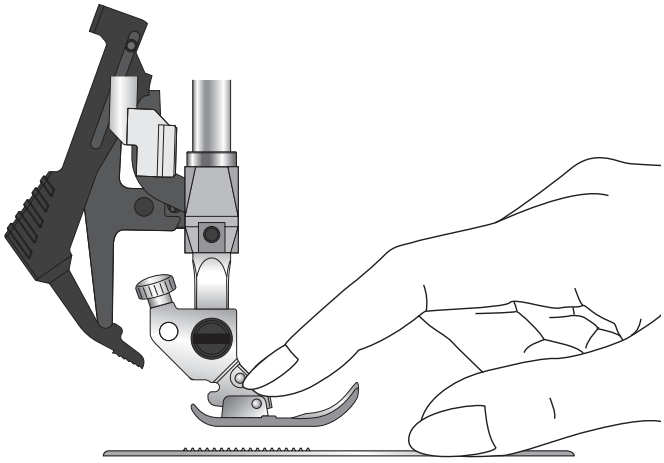

Changing the presser foot

Remove presser foot

Press the presser foot downwards until it disengages from the presser foot holder.

Attach presser foot

Place the presser foot under the presser foot holder (B), lining up the notch (C) with the pins (D).

Lower the presser foot lift and the presser foot will engage in the presser foot holder.

Note: Check that the presser foot is properly attached by raising the presser foot lift.

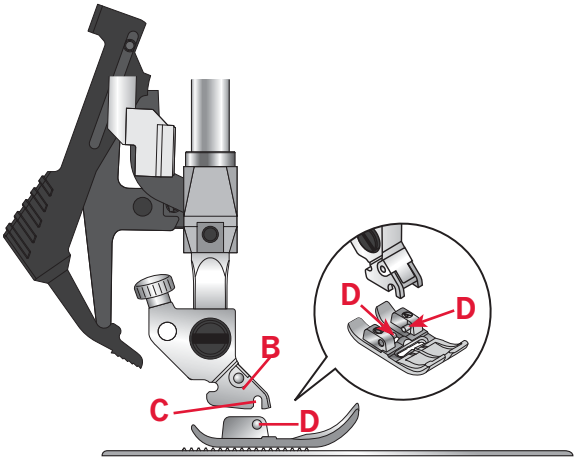

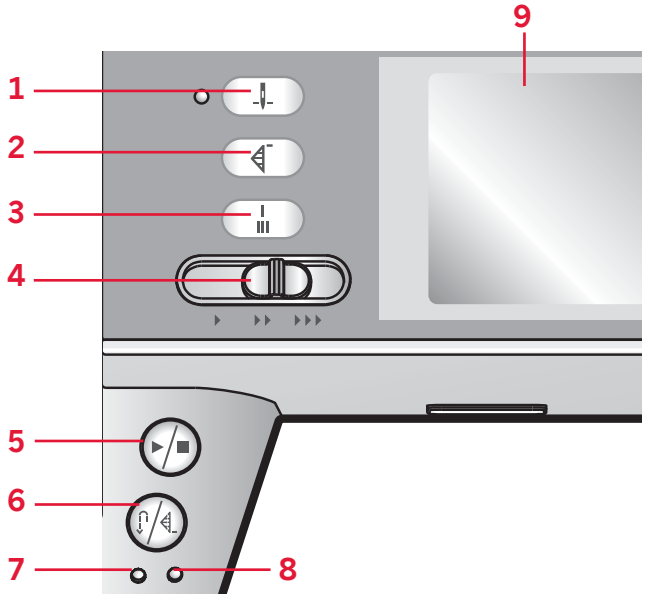

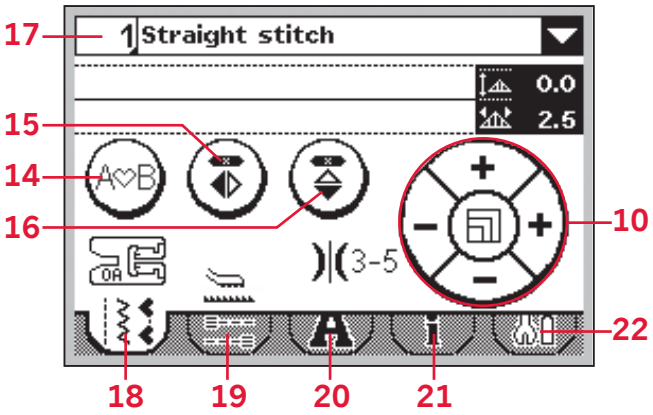

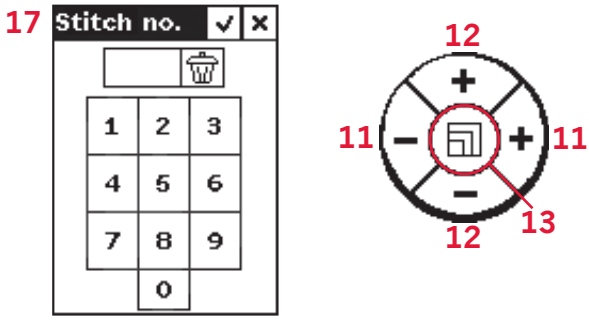

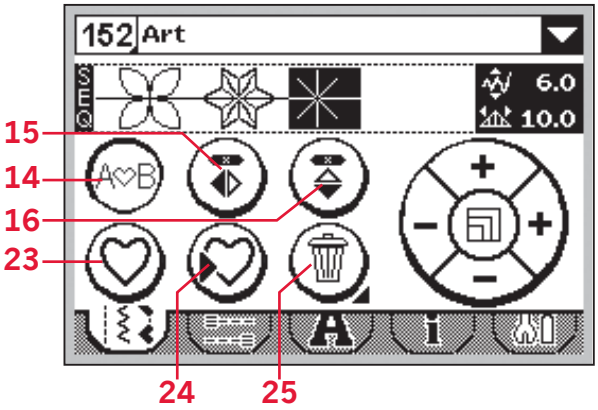

Buttons for ambition™ 1.5 machine

Needle up/down with indicator (1)

Press this button to move the needle up or down. The setting of the needle stop position is changed at the same time. The indicator is lit when needle down is activated.

You can also tap the foot control to raise or lower the needle.

Stitch restart (2)

If you stop sewing in the middle of the stitch, press stitch restart to start sewing at the beginning of the stitch again without having to reset any special settings you have made.

If you press the stitch restart button while you are actively sewing, the stitch will be finished and the machine will then stop.

Immediate tie-off (3)

Press the tie-off button while sewing and your machine sews a few tie-off stitches and stops automatically.

Speed control lever (4)

The speed control lever sets the maximum sewing speed. To increase sewing speed, slide the lever to the right, to decrease sewing speed, slide the lever to the left.

Start/stop (5)

Press this button to start or stop the machine without using the foot control. Press the button once to start and press it again to stop.

Reverse (6) with indicator (7)

For permanent reverse, press the button before starting to sew. The reverse indicator (6) will be lit and the machine sews in reverse until you press the button again to cancel.

If you press the reverse button while sewing, the machine sews in reverse for as long as you keep the button pressed. The reverse indicator is lit when the reverse button is pressed.

Reverse is also used when sewing buttonholes, programmed tie-off end and darning stitches to step between the parts of the stitch.

Programmed tie-off (6) with indicator (8)

The programmed tie-off indicator is lit to indicate that one or several tie-off options are activated. The indicator stays lit until the tie-off options are no longer in use.

Touch screen for ambition™ 1.5 machine (9)

The touch screen lets you view all your selections and options. Stitches are shown in real size.

Touch wheel (10)

The touch wheel has several functions. In sewing mode it adjusts stitch width/positioning and stitch length/density. In sequencing it is used to move the cursor back and forth in the sequence and to adjust stitches.

Stitch width or stitch positioning (11)

Increase or decrease the stitch width using the right "+" and left "-" icons on the touch wheel.

For straight stitches, use the right "+" and left "-" icons on the touch wheel to change the stitch position.

Stitch length or stitch density (12)

Increase or decrease the stitch length using the up "+" and down "-" icons on the touch wheel.

For satin stitches, use the up "+" and down "-" icons on the touch wheel to change the density for the selected stitch.

Elongation (13)

When a satin stitch is selected, touch the center of the touch wheel to activate elongation. The icon changes to an elongation symbol. Use the right "+" and left "-" icons to change the elongation of the satin stitch.

Sequencing (14)

Touch to enter and exit sequencing.

Mirror side to side (15)

For mirroring stitches and sequences side to side.

Mirror end to end (16)

For mirroring stitches and sequences end to end.

Direct selection (17)

Touch the stitch number in the top left corner of the screen to open the direct selection keypad. By touching one of, or a combination of, the 0 to 9 icons, you select the stitch represented by that number.

Settings & functions tabs

Some of the main functions on your machine are available through the tabs at the bottom of the screen.

Sewing mode (18)

Touch this tab to go to sewing mode. Sewing mode is the first view on the touch screen after you turn on the machine. This tab is also active when you are in sequencing.

Tie-off options (19)

Touch to set the tie-off options.

Alphabet mode (20)

In alphabet mode, you can create text sequences from various characters in four different fonts.

Stitch information (21)

Touch to display more detailed information about the currently selected stitch.

Settings menu (22)

Touch to open the menu for machine settings.

Sequencing

Load personal stitch or sequence (23)

Touch to load a previously saved stitch or sequence.

Save personal stitch or sequence (24)

Touch to save a stitch or sequence to the machine memory.

Delete (25)

For deleting stitches in a sequence. Long touch to delete the whole sequence.

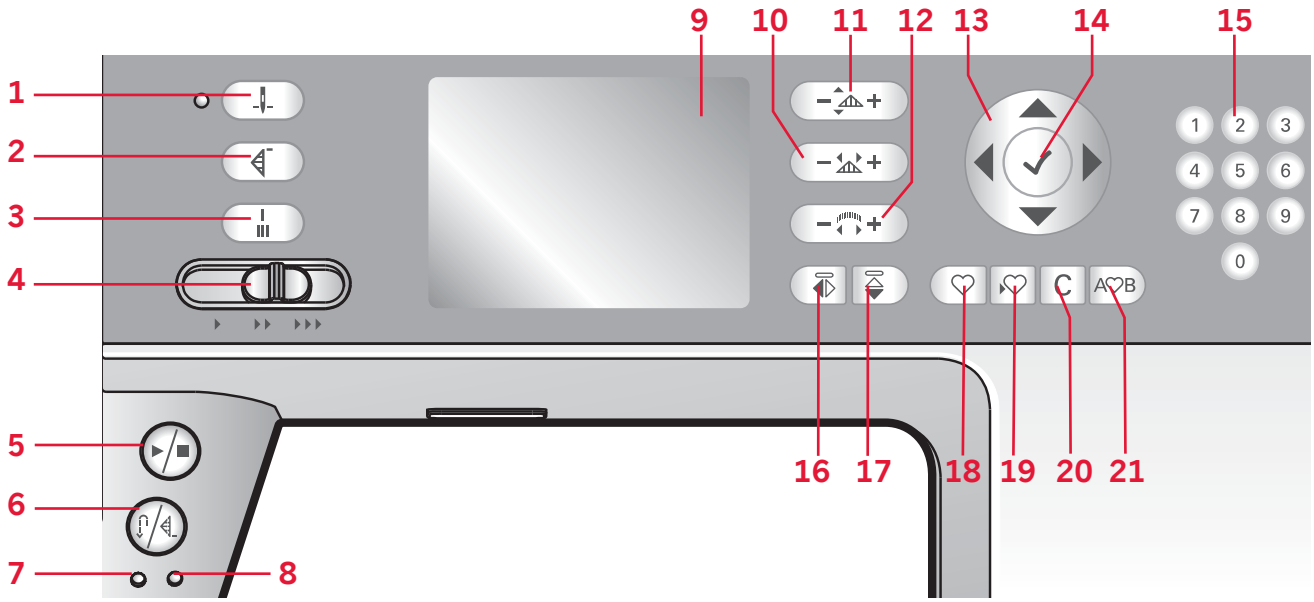

Buttons for ambition™ 1.0 machine

Needle up/down with indicator (1)

Press this button to move the needle up or down. The setting of the needle stop position is changed at the same time. The indicator is lit when needle down is activated.

You can also tap the foot control to raise or lower the needle.

Stitch restart (2)

When having stopped sewing in the middle of a stitch, press stitch restart to start sewing at the beginning of the stitch again without having to reset any special settings you have made.

If pressing the stitch restart button while sewing, the stitch will be finished and the machine will then stop.

Immediate tie-off (3)

Press the tie-off button while sewing and your machine sews a few tie-off stitches and stops automatically.

Speed control lever (4)

The speed control lever sets the maximum sewing speed. To increase sewing speed, slide the lever to the right, to decrease sewing speed, slide the lever to the left.

Start/stop (5)

Press this button to start or stop the machine without using the foot control. Press the button once to start and press it again to stop.

Reverse (6) with indicator (7)

For permanent reverse, press the button before starting to sew. The reverse indicator (6) will be lit and the machine sews in reverse until you press the button again to cancel.

If you press the reverse button while sewing, the machine sews in reverse for as long as you keep the button pressed. The reverse indicator is lit when the reverse button is pressed.

Reverse is also used when sewing buttonholes, programmed tie-off end and darning stitches to step between the parts of the stitch.

Programmed tie-off (6) with indicator (8)

The programmed tie-off indicator is lit to indicate that one or several tie-off options are activated. The indicator stays lit until the tie-off options are no longer in use.

Stitch length or stitch density (10)

Increase or decrease the stitch length using the “+” and “-” buttons.

For satin stitches, use the “+” and “-” buttons to change the density for the selected stitch.

Stitch width or stitch positioning (11)

Increase or decrease the stitch width using the “+” and “-” buttons.

For straight stitches, use the “+” and “-” buttons to change the stitch position.

Elongation (12)
When a satin stitch is selected, press the "+" and "-" buttons to set the elongation of the stitch.

Wheel (13)
Use these buttons to move around the graphic display. The wheel has up and down arrow buttons, left and right arrow buttons and the wheel center icon is a checkmark for OK (14).

The wheel has several functions, for example press the up or down arrow button to step between stitches, set the size of a buttonhole and move between options in the settings menu. Press down until a tab is selected, and then the left or right arrow button to select mode (22-26).

OK button (14)
The wheel center icon is a checkmark for OK. Use the OK button to confirm your selections.

Direct selection (15)
By pressing one of, or a combination of, the 0 to 9 buttons, you select the stitch represented by that number immediately.

Mirror side to side (16)
For mirroring stitches and sequences side to side.

Mirror end to end (17)
For mirroring stitches and sequences end to end.

Load personal stitch or sequence (18)
Press this button to load a previously saved stitch or sequence.

Save personal stitch or sequence (19)
Press this button to save a stitch or sequence to the machine memory.

Delete (20)
For deleting stitches in a sequence, or sequences saved in the machine memory.

Sequencing (21)
Press this button to enter sequencing.

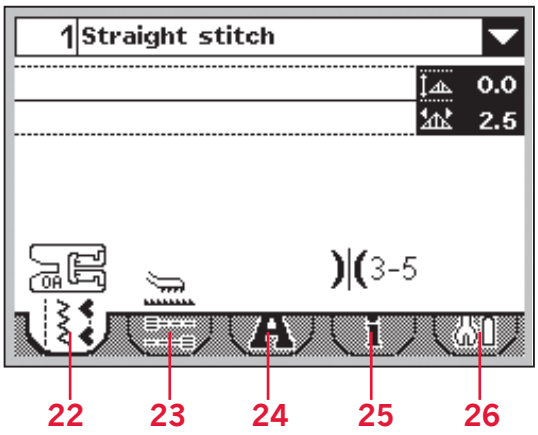

Graphic Display on ambition™ 1.0 machine (9)
The graphic display lets you view all your selections and options. Stitches are shown in real size. The buttons on the wheel are used to move around the graphic display.

Settings & functions tabs
Some of the main functions on your machine are accessible through the tabs at the bottom of the screen. Press the down arrow button until a tab is highlighted, then step between the tabs by pressing the left or right arrow button (13).

To move directly from the far left tab to the far right tab, press the left arrow button one time. To move directly from the far right tab to the far left tab, press the right arrow button one time.

Sewing mode (22)
Sewing mode is the first view on the graphic display after you turn on the machine.

Tie-off options (23)
Select to set the tie-off options.

Alphabet mode (24)
In alphabet mode, you can create text sequences from various characters in two different fonts.

Stitch information (25)
Select to display more detailed information about the currently selected stitch.

Settings menu (26)
Select to open the menu for machine settings.

Settings

In the settings menu, you can adjust the machine settings and screen settings. All settings are stored even when the machine is turned off.

Settings menu (1.5)

Touch the settings menu tab (A) to open. The settings menu is divided into two tabs. Select a tab (1 or 2) by touching it.

Twin needle

Touch the twin needle icon to activate. Touch "-" and "+" to set the twin needle width. The selected width is shown in the twin needle icon.

When a twin needle size is selected, the width of all stitches is limited for that needle size to prevent needle breakage.

A warning pop-up will be shown if you select a stitch that is too wide for the set twin needle size.

When activated, the twin needle icon will be shown in sewing mode.

The setting is kept until you deactivate it.

Note: Twin needle and stitch width safety cannot be used at the same time. A warning sound will be heard when trying to activate both settings.

Stitch width safety

Select this function when using a straight stitch needle plate or a straight stitch presser foot to lock the center needle position for all stitches to prevent damage to the needle, presser foot or stitch plate.

Touch the stitch width safety icon to activate. When activated, the stitch width safety icon will be shown in sewing mode.

The setting is kept until you deactivate it.

Note: When turning on the machine with this setting activated and for every stitch selection that is not a straight stitch, a pop-up informs you that the machine is set for straight stitch.

Twin needle and stitch width safety cannot be used at the same time. A warning sound will be heard when trying to activate both settings.

Contrast

Touch "-" and "+" to adjust the contrast of the touch screen. The setting is stored even when the machine is turned off.

ambition™ 1.5

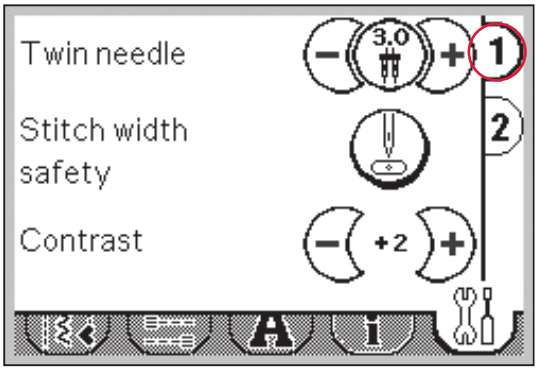

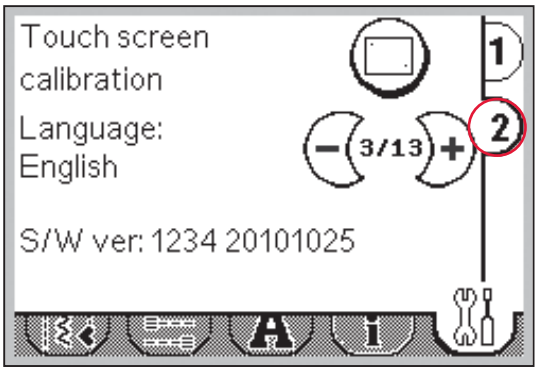

Touch screen calibration

When touching the icons on the screen, the screen might need a calibration to adjust to your touch. Touch the calibration icon to open a special view for touch screen calibration. Use the stylus to first touch the center of the cross in the top left corner, then touch the center of the cross in the bottom right corner. The calibration view closes automatically when you have touched the second cross.

Language

Touch "-" and "+" to change the language of all text in your machine.

Software version

Check the software version for your sewing machine.

Settings menu (1.0)

Open by selecting the settings menu tab. Step between the available settings by pressing the up and down arrow buttons on the wheel.

Twin needle

Press OK (B) to activate. A checkmark appears in the box. Use the left and right arrow buttons on the wheel to set the twin needle width. The selected width is shown on the display.

When a twin needle size is selected, the width of all stitches is limited for that needle size to prevent needle breakage.

A warning pop-up will be shown if you select a stitch that is too wide for the set twin needle size.

When activated, the twin needle icon will be shown in sewing mode.

The setting is kept until you deactivate it.

Note: Twin needle and stitch width safety cannot be used at the same time. When stitch width safety is selected, the outlines of the twin needle box will be dashed.

Stitch width safety

Press OK (B) to avtivate.

Select this function when using a straight stitch needle plate or a straight stitch presser foot to lock the center needle position for all stitches to prevent damage to the needle, presser foot or stitch plate.

When activated, the stitch width safety icon will be shown in sewing mode.

The setting is kept until you deactivate it.

Note: When turning on the machine with this setting activated and for every stitch selection that is not a straight stitch, a pop-up informs you that the machine is set for straight stitch.

Stitch width safety and twin needle cannot be used at the same time. When twin needle is selected, the outlines of the stitch width safety box will be dashed.

Contrast

Use the left and right arrow buttons to adjust the contrast of the graphic display. The selected value is shown on the display.

Language

Press the left and right arrow buttons to change the language of all text in your machine.

Software version

Check the software version for your sewing machine.

ambition™ 1.0

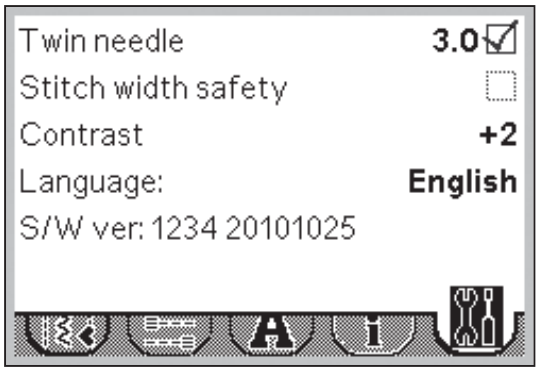

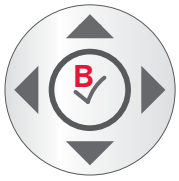

Sewing

Sewing mode is the first view on the screen after you turn on the machine. Your selected stitch will be shown in real size in the stitch field. Here you will find all the basic information you need to start sewing. Straight stitch is selected by default.

Sewing mode - overview (1.5)

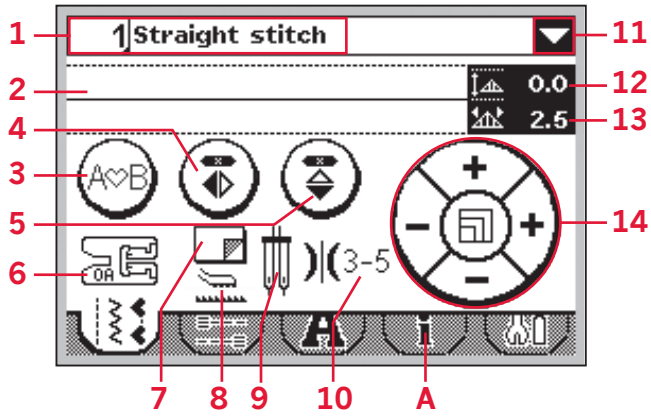

1. Selected stitch number and name
2. Stitch field
3. Sequencing
4. Mirror side to side
5. Mirror end to end
6. Presser foot recommendation
7. Stabilizer recommendation
8. Feed dog/IDT™ recommendation
9. Needle recommendation/setting

Set for twin needle

Wing needle recommended

Set for stitch width safety

10. Recommended tension
11. Drop down stitch selection
12. Stitch width/stitch positioning
13. Stitch length/density
14. Touch wheel

Note: All symbols and options will not be shown at the same time.

Note: If the presser foot recommendation shows a presser foot with a "+", an optional presser foot is required for the selected stitch. Go to the stitch information tab (A) for details.

Select a stitch

Touch the stitch number on the screen (1) to open the selection keypad. Touch 1-9 to select the corresponding stitch. Press two or three digits in quick succession to select a stitch from 10 and up. Touch the OK icon (15) to confirm your stitch selection. Touch the delete icon (16) to erase entered number. Touch cancel (17) to close the keypad without selecting a stitch.

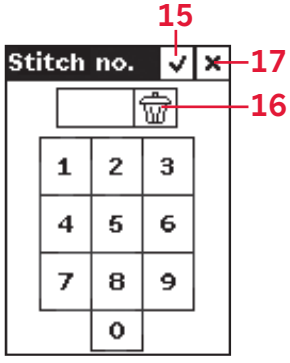

If the stitch number does not exist, you will hear a beep and the first entered digit will be selected as a stitch.

You can also select a stitch by touching the drop down stitch selection (11), and select from the drop down list. Touch the arrows to scroll up and down in the list and touch a stitch name to select it.

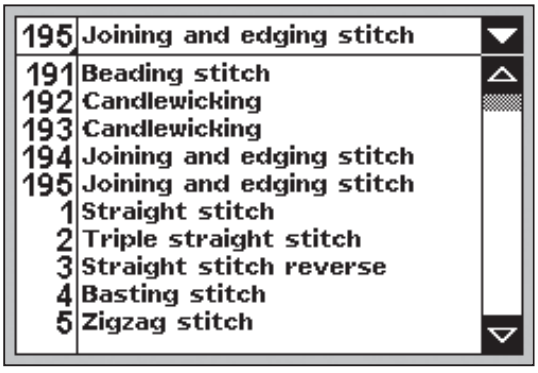

Sewing mode - overview (1.0)

1. Selected stitch number and name
2. Stitch field
3. Stabilizer recommendation
4. Presser foot recommendation
5. Feed dog/IDT™ recommendation
6. Needle recommendation/setting

Set for twin needle

Wing needle recommended

Set for stitch width safety

7. Recommended thread tension
8. Stitch width/stitch positioning
9. Stitch length/density

Note: All symbols and options will not be shown at the same time.

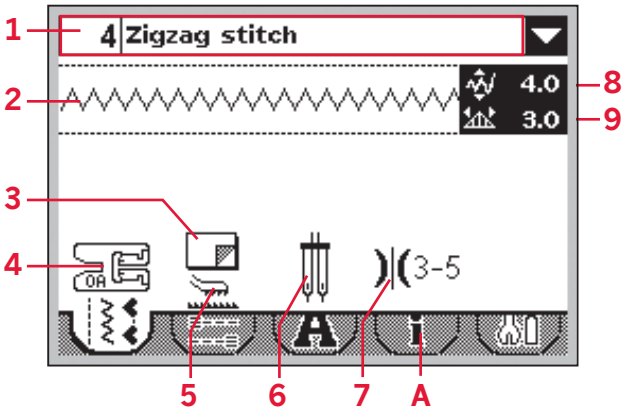

Note: If the presser foot recommendation shows a presser foot with a "+", an optional presser foot is required for the selected stitch. Go to the stitch information tab (A) for details.

Select a stitch

By pressing one of the direct selection buttons, you select that stitch number immediately. Press two or three digits in quick succession to select a stitch from 10 and up. If the stitch number does not exist, you will hear a beep and the first entered digit will be selected as a stitch.

You can also press the up and down arrow buttons on the wheel to step between stitches. Press up or down to open a drop down list. Move up and down in the list using the up and down arrows on the wheel. Press OK (B) to select a stitch.

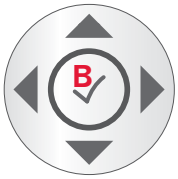

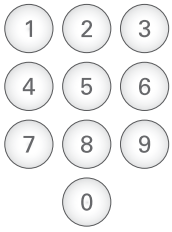

Stitch information

Select the information tab (A) to view more detailed information, tips and hints for the currently selected stitch.

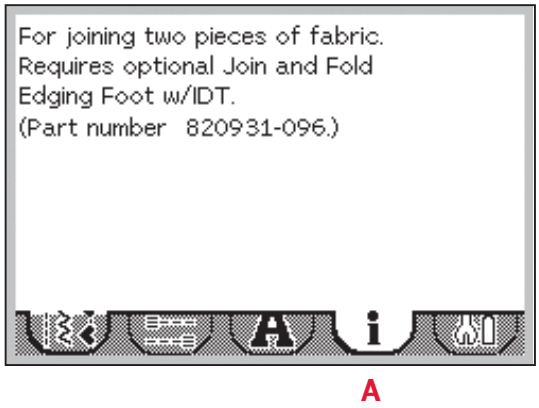

Stitch adjustments

Your machine will set and recommend the best settings for each selected stitch. You can make your own adjustments on the selected stitch.

All setting changes, except for thread tension, only affect the selected stitch, and will be reset to default when selecting another stitch. The changed settings are not automatically saved when turning your machine off.

The set stitch width and stitch length are shown next to the icons for each adjustment. When trying to exceed minimum or maximum settings a warning sound will be heard.

Note: The numbers are highlighted when the setting is changed.

ambition™ 1.5

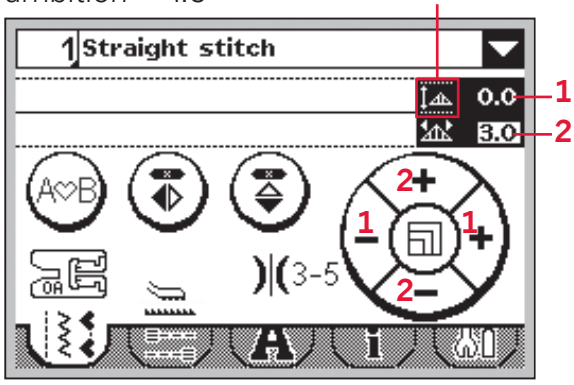

Stitch width/stitch positioning (1)

Use "+" and "-" to increase or decrease the stitch width.

For straight stitches, use "+" and "-" to move the stitch position left or right. When a straight stitch is selected, the icon (A) changes to show that stitch positioning is active instead of stitch width.

ambition™ 1.0

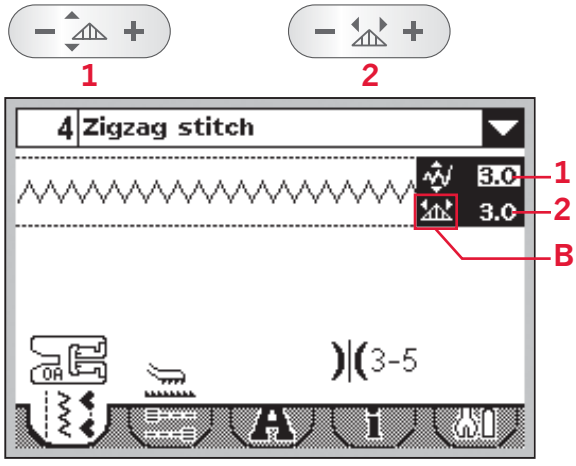

Stitch length/stitch density (2)

Use "+" and "-" to increase or decrease the stitch length.

For satin stitches the stitch density can be adjusted. This is often used with specialty threads and when a less dense satin stitch is desired. The stitch density does not affect the actual length of the entire stitch.

For satin stitches, use "+" and "-" to increase or decrease the stitch density. When a satin stitch is selected, the icon (B) changes to show that stitch density is active instead of stitch length.

Elongation (3)

Elongation is used to lengthen satin stitches. The entire stitch will be longer but the density will remain the same.

For 1.5: Touch the center of the touch wheel. The icon changes to show an elongation symbol. Increase or decrease the elongation of the satin stitch using "+" and "-".

If elongation is not avaliable for the selected stitch, a warning sound will be heard when touching the center of the touch wheel, and the icon will not change.

For 1.0: Press the "+" and "-" on the elongation button to increase or decrease the elongation of the satin stitch.

If elongation is not avalibale for the selected stitch, a warning sound will be heard when pressing the elongation button.

ambition™ 1.5

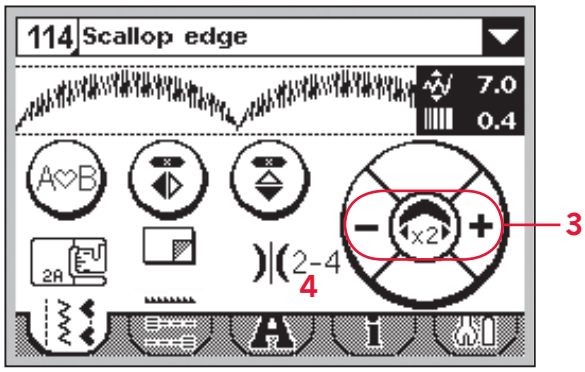

ambition™ 1.0

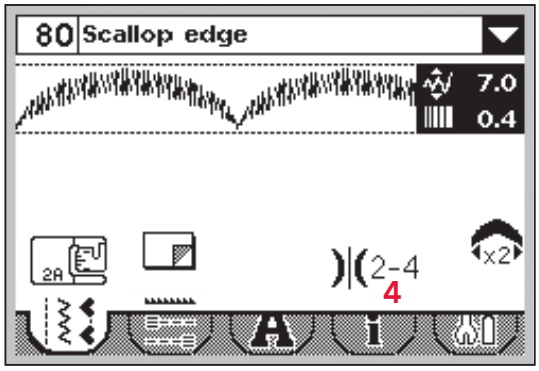

Thread tension (4)

Your machine will show the recommended thread tension setting for the selected stitch. See page 2:7 on how to set and adjust the thread tension setting.

Mirroring

To mirror stitches or sequences side to side, press mirror side to side (A). To mirror end to end, press mirror end to end (B).

Note: Buttonholes cannot be mirrored.

ambition™ 1.5

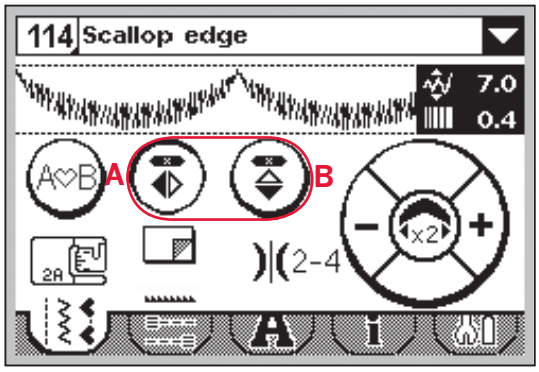

ambition™ 1.0

Tie-off options

The tie-off options let you program tie-offs both at the beginning (A) and the end (B) of the stitch.

1. Go to tie-off options (1).
2. Select the functions you want to use (A and/or B).
3. Return to sewing mode by selecting the sewing mode tab (2).

Tie-off mini icons (C) will be shown, indicating which tie-off functions are selected. The selections will remain until you deselect them.

Note: For immediate tie-off, use the tie-off button, found on the front of the machine.

Sewing with tie-off options selected

1. The tie-off beginning (A) will be performed as soon as you start to sew.
2. Press the reverse button to activate tie-off end (B). The programmed tie-off indicator will be lit. The machine will finish the stitch and do a tie-off.
3. To deactivate the tie-off options, go to tie-off options as described above and deselect the checkboxes.

Reverse button functions in tie-off options

- Stop sewing and press the reverse button twice to activate reverse sewing. The reverse indicator will be lit. No tie-off will be performed.
- Press the reverse button when sewing in reverse to activate tie-off end. Both the reverse indicator and the programmed tie-off indicator will be lit.
- To go back to sewing forward, stop sewing in reverse and press the reverse button. No indicators will be lit and no tie-off will be performed.

ambition™ 1.5

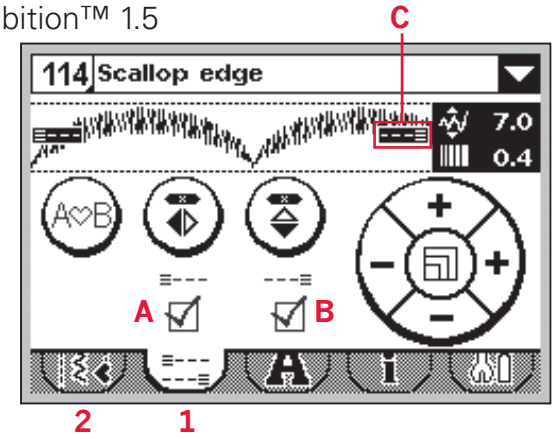

ambition™ 1.0

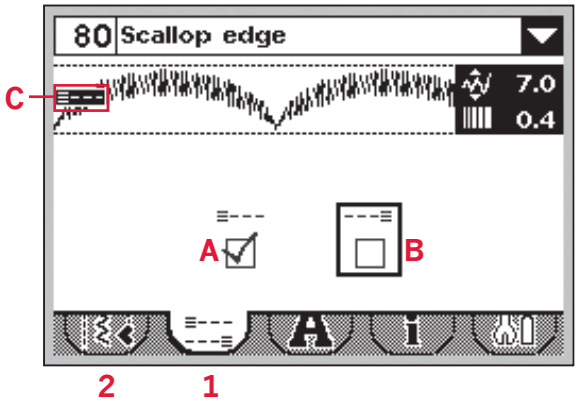

Save personal stitch

You can save an adjusted stitch in your machine by pressing the save button. This will open the save sequence menu. Stitches as well as sequences can be saved in these four memories.

Saving a stitch works just like saving a sequence. See page 4:5.

Adjustments in stitch length, width, density and mirroring will be saved.

Note: Some special stitches, such as buttonholes, cannot be saved. A pop-up will inform you of this when you try to save such a stitch.

ambition™ 1.5 ambition™ 1.0

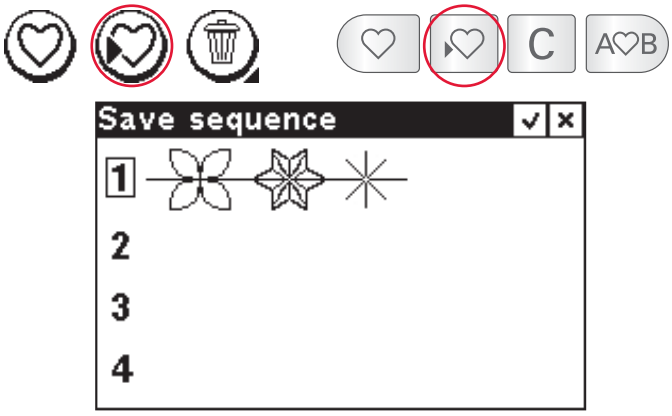

1.5

Load personal stitch

Loading a stitch works just like loading a sequence. Open the load sequence menu by pressing the load button. Select the stitch you want to load. See page 4:6 for more information.

ambition™ 1.5 ambition™ 1.0

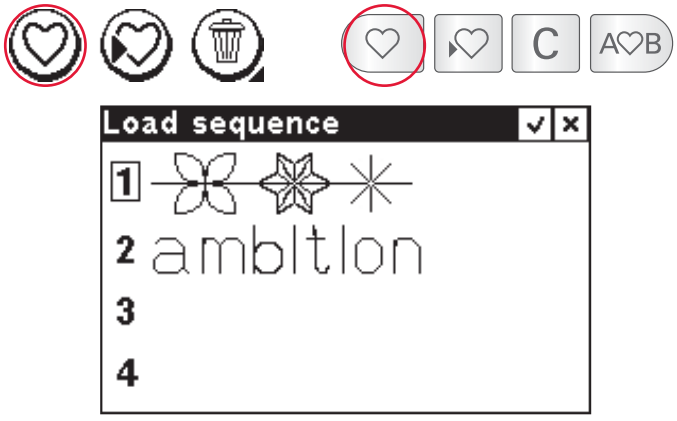

1.5

Sewing

Sewing techniques

Three-step zigzag stitch

Stich number 9 (8 on 1.0) can be used to overcast raw edges. Make sure the needle pierces the fabric on the left side and overcasts the edge on the right side.

Stitch number 9 can also be used as an elastic stitch to allow seams to stretch when sewing knit fabrics.

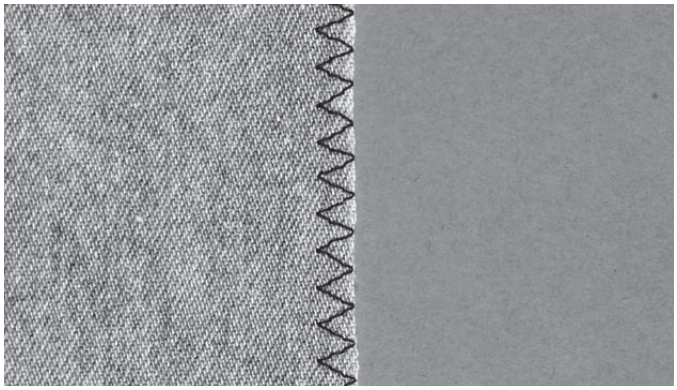

Buttonholes

Your machine's buttonholes are specially adjusted for different kinds of fabric and garments. Look at the stitch table on page 1:8 in this book to find descriptions of each buttonhole.

The fabric should be interfaced and/or stabilized where buttonholes are to be sewn.

One step Buttonhole Foot 5B

1. Mark the the position of the buttonhole on your garment.
2. Attach buttonhole foot 5B and pull out the button holder plate. Insert the button. The button will determine the length of the buttonhole.
3. Make sure that the thread is pulled though the hole in the presser foot and placed under the foot.
4. Select the buttonhole you want to sew and adjust the length and density as desired.

Note: Always sew a test buttonhole on a scrap piece of fabric.

5. Position your garment under the presser foot so that the marking on the fabric is aligned with the center of the buttonhole foot.
6. Lower the buttonhole lever all the way down, and push it away from you.
7. Hold the end of the upper thread and start sewing. The buttonholes are sewn from the front of the presser foot to the back.
8. Once the machine has sewn the buttonhole, raise the presser foot.

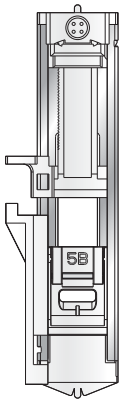

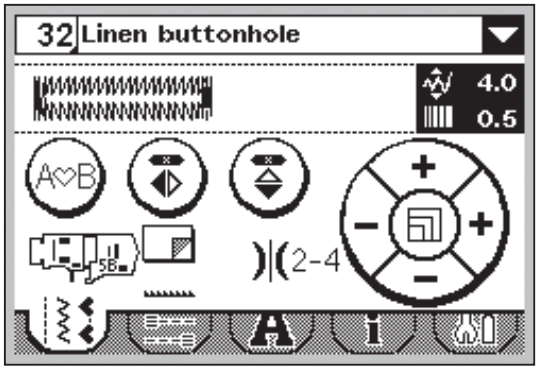

1.5

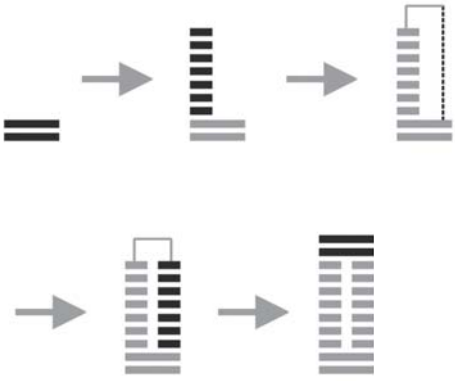

Corded buttonhole (Stretch fabrics)

When sewing buttonholes in stretch fabrics we recommend cording the buttonhole to increase the stability and to keep the buttonhole from stretching out.

1. Loop a piece of heavy thread or pearl cotton over the finger at the back of the buttonhole foot 5B. Pull the thread tails under the foot, toward the front, then secure around the finger at the front of the foot.
2. Stitch a buttonhole. The satin buttonhole columns will stitch over the cord.
3. When the buttonhole is finished, lift the cord off the finger and pull out the slack.
4. Cross the cord in front of the needle and thread cord ends into a large needle, pull to the wrong side and knot ends before cutting excess.
5. Use the seam ripper to carefully open the buttonhole.

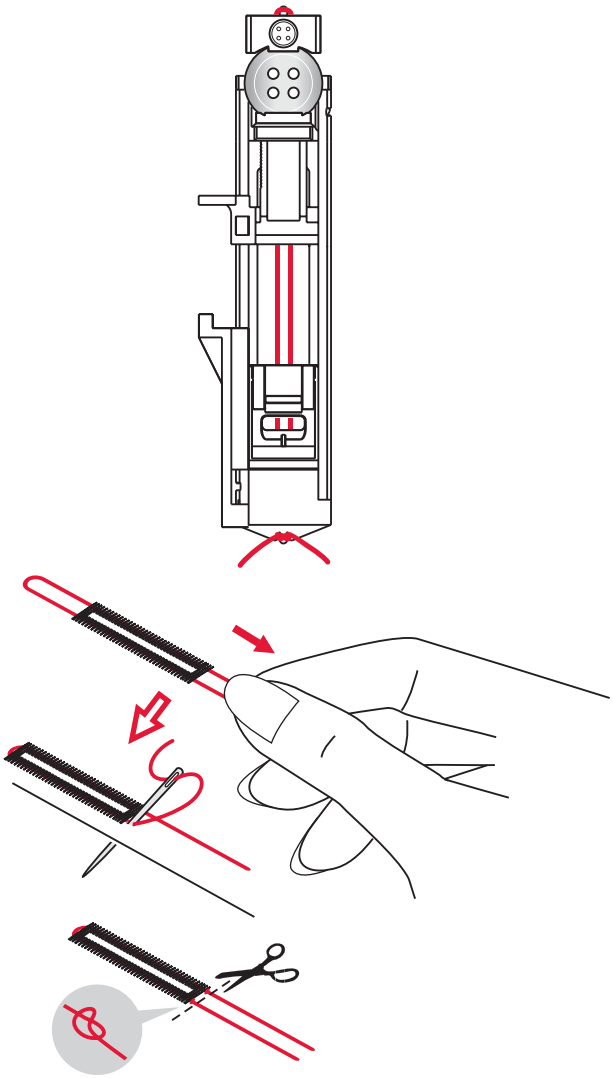

Sew on a button

1. To sew on a button, remove the presser foot and select the button sewing stitch.
2. Lower the feed dogs.
3. Place the button under the presser foot holder. Use the mirroring function to make sure the holes in the button are aligned with the swing of the needle and the width is appropriate for the actual button. If necessary, adjust the stitch width to change the width between the holes.
4. You can increase or decrease the number of stitches that will fasten the button on the fabric in steps of two, using the left and right arrow buttons on the wheel.
5. Start to sew. The machine will sew the program for you and then tie-off and stop.

Note: Use the multi-purpose tool to create a thread shank for your button. You can also use the Sew-on Button Foot #820 473-96, available as an optional accessory.

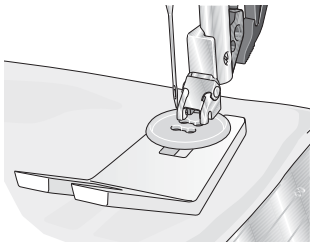

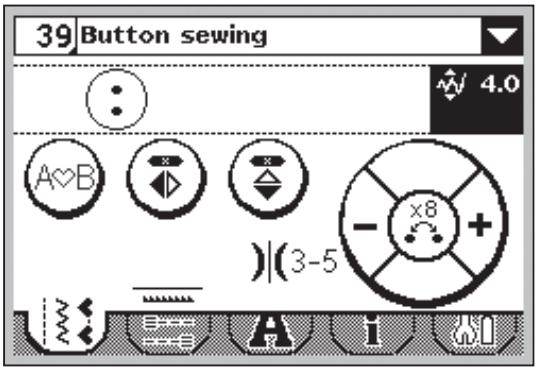

1.5

Darning and mending

Darning a small hole or a tear before it becomes larger can save a garment. Choose a thread in a color as close to your garment as possible.

1. Place fabric or stabilizer in position under the hole or tear in your garment.
2. Select a darning stitch.
3. Start sewing above the hole and over it.
4. Once you have sewn across the hole, press the reverse button to set the length of the stitch.

   Your sewing machine will automatically complete the stitch.
5. By default, the machine will be set to repeat the same size darning square, just continue sewing.

   To set a different length of the darning stitch, select the stitch again and continue with steps 3 and 4 above.

Note: Darning stitches can also be sewn using the buttonhole foot 5B. Set the length of the darning stitch by pulling out the button holder plate and lower the buttonhole lever to sew the stitch.

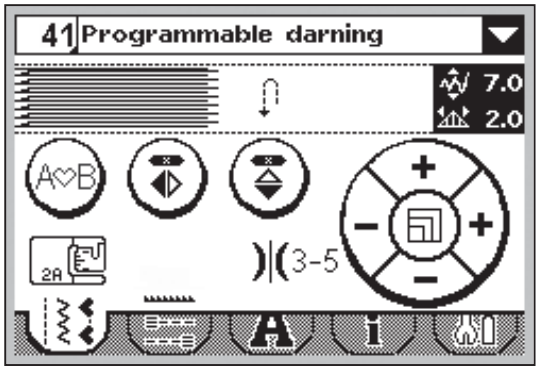

1.5

Sewing hems in heavy fabric

When sewing over seams in extra heavy fabric or a blue jeans hem, the foot can tip as the machine climbs over the seam. Use the multi-purpose tool to balance the height of the presser foot as you sew.

One side of the multi-purpose tool is thicker than the other. Use the side that suits the thickness of the seam best.

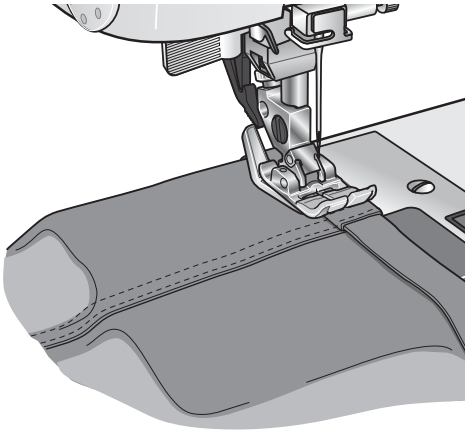

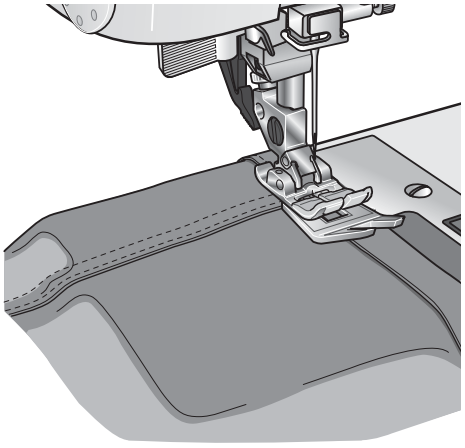

Quilting

A quilt usually consists of three layers, two layers of fabric with a layer of batting sandwiched between.

To sew three layers together, you have a wide variety of stitches and techniques to choose from.

Stitch-in-the-Ditch

Use the Fancy stitch foot 1A with IDT™. Stitching in the ditch means using the guide on the presser foot to follow the seams in the quilt blocks.

Begin by pin basting your quilt through all layers with safety pins, starting from the center of your quilt and working out. Place a pin every 6-8 inches (15-20 cm).

Note: You can also use the optional Stitch-in-Ditch w IDT™ presser foot #820 925- 096.

Crazy quilt stitching

Embellish your quilt with decorative stitches. The stitches can be sewn in a coordinating or contrasting color. Decorative threads like rayon embroidery or heavy cotton threads are sometimes used.

Free-motion stippling

Free-motion stippling not only keeps the top, batting and backing together, but it also adds texture and interest to your quilt.

Free-motion stippling is done with the feed dogs lowered. You move the fabric manually to determine the stitch length.

1. Set your sewing machine for stippling by selecting the straight stitch no 1.
2. Attach the optional Open Toe Free-Motion foot #820 988-096.
3. Lower the feed dogs.
4. Pin baste your quilt layers and prepare your quilt as explained under Stitch-in-the-Ditch above.

Tip! Practice stippling on scraps of fabric and batting. Sewing with a constant speed will help to keep the stitches even.

5. Begin near the center of your quilt. Take one stitch and pull the bobbin thread to the top of the quilt. Take a few stitches right next to one another to lock the threads.
6. Now move the quilt so that your stitching creates swirls. The stitching should not cross over itself, and should travel in a meandering motion.

Blindhem

The blindhem stitch number 16 (14 on 1.0) is used to make invisible hems on skirts, trousers and home decorating. Use foot number 3 with IDT™.

1. Finish the edge of the hem.
2. Fold and press the hem allowance to the wrong side.
3. Fold the hem back on itself so approximately 3/8" (1 cm) of the finished edge extends beyond the fold. The wrong side of your project should now be facing up.
4. Place the fabric under the presser foot so that the fold runs along edge guide A.
5. When the needle swings into the fold it should catch a small amount of fabric. If the stitches are visible on the right side, adjust edge guide A by turning adjusting screw B until the stitch that catches the hem just barely shows.

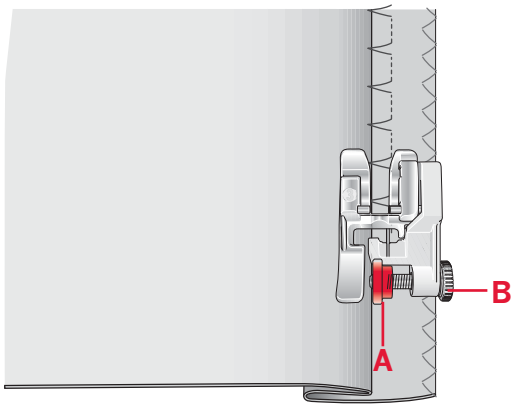

Elastic blindhem stitch

The elastic blindhem stitch number 17 (15 on 1.0) is especially suitable for stretchy fabrics, because the zigzag in the stitch lets the stitch stretch. The hem is finished and sewn at the same time. There is no need to finish the raw edge first on most knits.

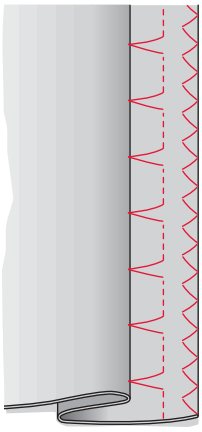

Blindhem stitch number 16 (14)

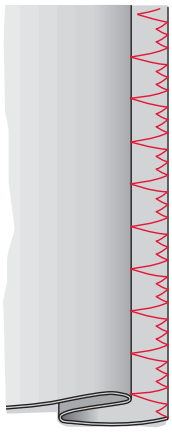

Elastic blindhem stitch number 17 (15)

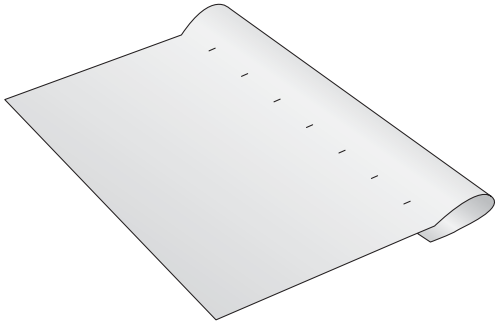

Sewing in zippers

There are different ways to sew in zippers. Follow the directions included with your pattern for best results.

For all types of zippers it is important to sew close to the teeth of the zipper. The zipper foot 4 can be snapped to the presser foot bar on the left or right, depending on how you will insert your zipper.

Set the stitch position so the needle enters close to the edge of the zipper teeth by using one of the 29 needle positions available for the straight stitch. If the presser foot is attached on the right side, the needle must only be moved to the right. If the foot is attached on the left, the needle must only be moved to the left.

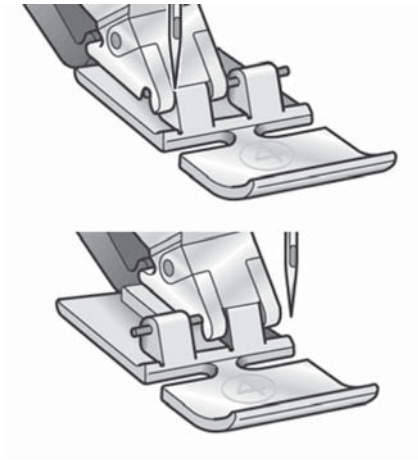

Common sewing pop-ups

Bobbin empty (1.5)

When the bobbin is almost empty, the machine stops automatically and a pop-up appears on the screen. Replace the empty bobbin with a full one and press OK to confirm.

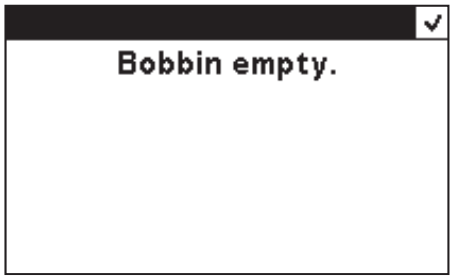

1.5

Main motor overload

If you are sewing on very heavy fabric or if the machine is blocked when sewing, the main motor can get overloaded and the machine will stop sewing. The pop-up message will close when the main motor and power supply are secure.

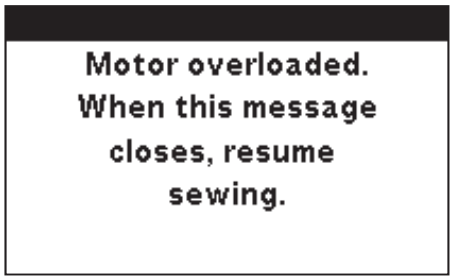

Sequencing

The sequencing function on your machine makes it possible to combine stitches and letters into sequences. You can add up to 20 stitches and letters in the same sequence. You can also customize your own stitch by making adjustments to an existing stitch. Save your own stitches and sequences on your machine and reload and sew them any time you like.

All stitches in your sewing machine can be used for sequencing except for buttonholes, darning stitches, button sewing and bartacks.

Overview

1. Current stitch number and name
2. Stitch field
3. Cursor
4. Enter sequencing
5. Mirror stitch side to side
6. Mirror stitch end to end
7. Load sequence
8. Save sequence
9. Delete stitch or whole sequence
10. Stitch width/positioning
11. Stitch length/density
12. Move cursor

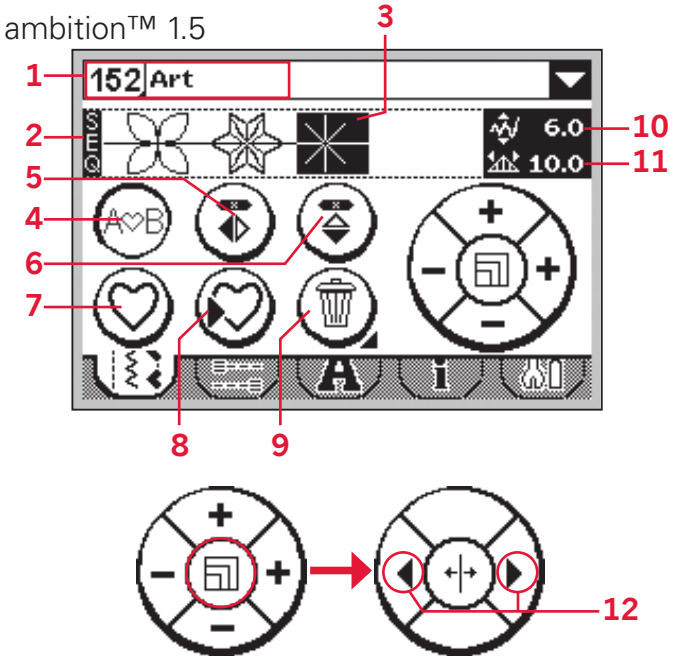

Create a sequence

- Press sequencing (4) to enter sequencing.
- Select the stitch you wish to use (see pages 3:1-3:2 on how to select a stitch). The stitch will appear in the stitch field.
- Select the next stitch and it will appear to the right of the previously entered stitch.

Move cursor (12)

The current position in the stitch field is marked by a cursor (3). Inserted stitches will be placed at the cursor position.

For 1.5: Touch the center of the touch wheel. The appearance of the cursor changes to a vertical line. It can now be moved through the sequence by touching the left and right arrows on the touch wheel.

For 1.0: Move the cursor through the sequence using the left and right arrows on the wheel.

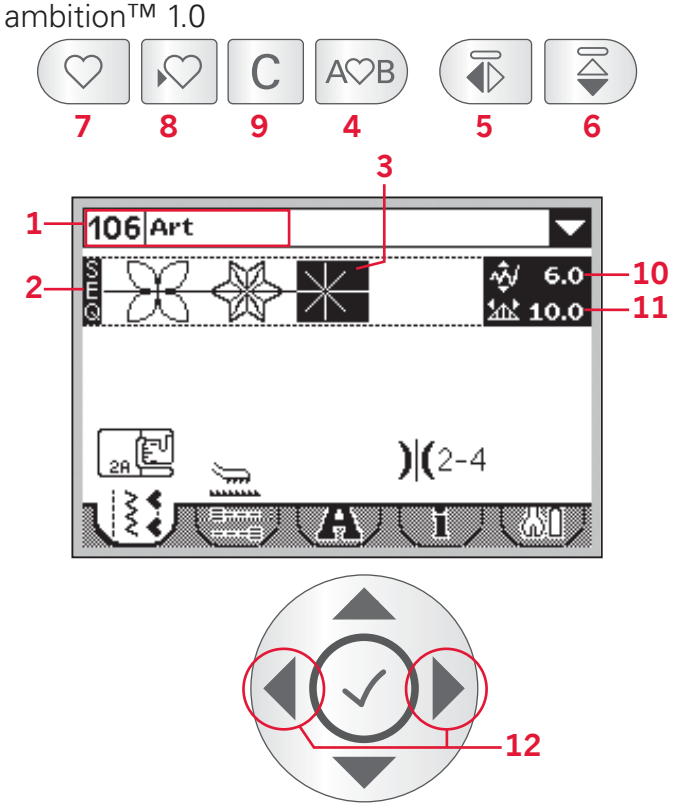

Using the alphabet (1.5)

Alphabet mode overview

1. Font selection/font preview
2. Name of selected font
3. Drop down font selection list
4. Stitch field
5. Keyboard
6. Change character set (upper case/lower case, normal/special letters and symbols)
7. Move cursor
8. Delete stitch or whole sequence

Create a text sequence

- Touch the alphabet mode tab (A).
- Touch the font symbol in the top left corner (1) to open a drop down list of available fonts. Select desired font by touching it. The drop down list closes.
- Touch the letters and characters on the keyboard (5) to create your sequence. Each letter will be placed at the cursor position in the stitch field (4).

To move the cursor through the sequence, touch the arrows in the bottom corners of the keyboard on the screen (7).

Select character set

To change character set between upper or lower case, normal or special letters and numbers and symbols, touch the character icons in the lower right corner of the keyboard (6). Touch repeatedly to step between the character sets.

Note: Lower case characters are only available for the Block font.

ambition™ 1.5

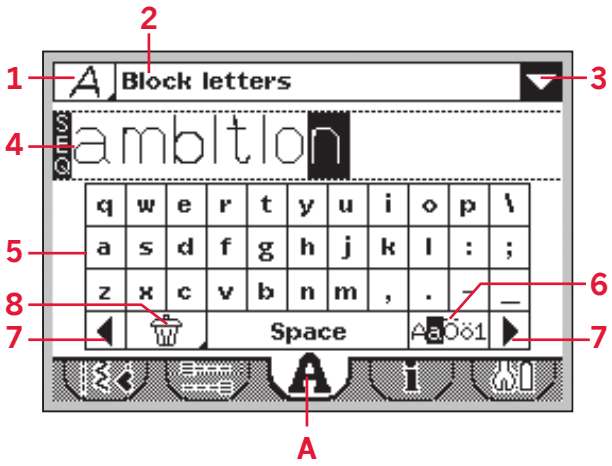

Using the alphabet (1.0)

Alphabet mode overview

1. Font selection/font preview
2. Name of selected font
3. Stitch field
4. Keyboard
5. Change character set (upper case/lower case, normal/special symbols)
6. Delete

Create a text sequence

- Press the left or right arrow buttons on the wheel to step to alphabet mode (A).
- Press the up arrow button until the font preview (1) at the top of the display is selected. Press OK (B) to open a list of available fonts. Step to desired font with the arrow buttons and press OK (B) to select it.
- Press the down arrow button twice to step to the keyboard. Move around the keyboard using the arrow buttons and press OK (B) to add a letter or character to the sequence. Each letter will be placed at the cursor position in the stitch field.

Note: The selected letter on the keyboard will be highlighted.

- To move the cursor in the sequence, use the arrow buttons to step to the stitch field (3) and then press the left and right arrow buttons to move the cursor back and forth in the sequence.

Select character set

Press the arrow buttons to step to the character set icons (5). Press OK (B) to step between the available character sets: upper or lower case, normal or special letters and numbers and symbols.

Note: Lower case characters are only available for the Block font.

ambition™ 1.0

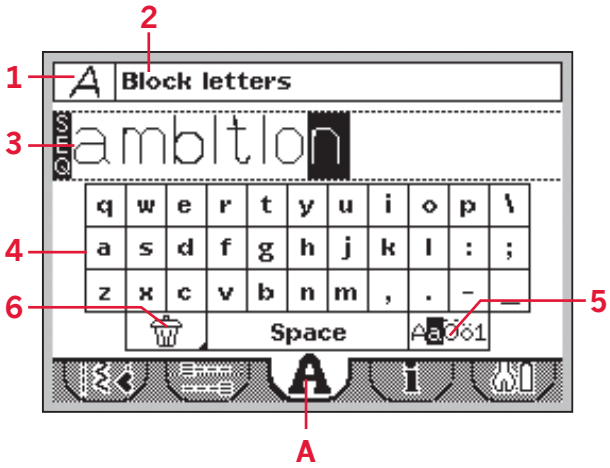

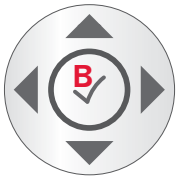

Adjust stitches

You can mirror, adjust length, width, density and stitch position of the selected stitch.

When you have changed a value, the digits will be highlighted to show that the value is not default.

For 1.5: Move the cursor as described on page 4:1. Place the cursor after the stitch you want to adjust. Touch the center of the touch wheel. The stitch becomes highlighted. Adjust the stitch as described on pages 3:3-3:4.

Touch the center of the touch wheel again to activate the cursor.

For 1.0: Use the left and right arrows on the wheel to highlight the stitch you want to adjust. Adjust the stitch as described on pages 3:3-3:4.

Note: The adjustments will only affect the highlighted stitch. If you return to sewing mode, all adjustments made there will affect the entire sequence and will not be saved.

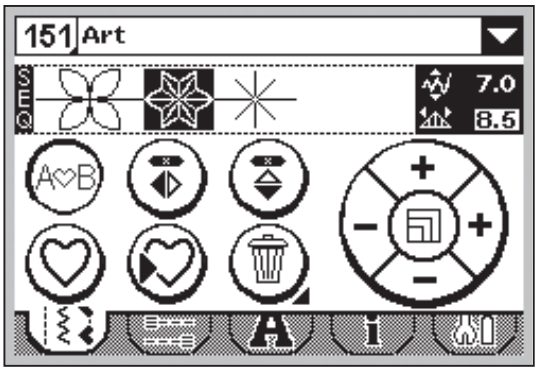

1.5

Delete stitches or letters in a sequence

To delete a stitch, move the cursor to that stitch and press delete (9).

To delete the entire sequence from the stitch field, long press delete. A pop-up message will appear asking if you wish to delete all stitches. Select yes/OK. The pop-up message closes and all stitches are deleted from the stitch field.

ambition™ 1.5

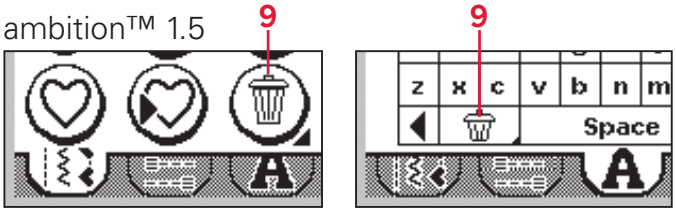

Sequencing *Alphabet mode*

ambition™ 1.0

Sequencing

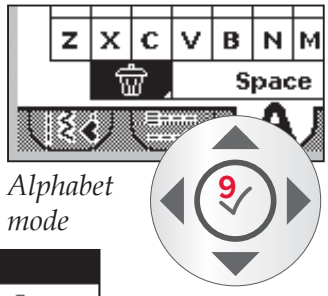

Alphabet mode

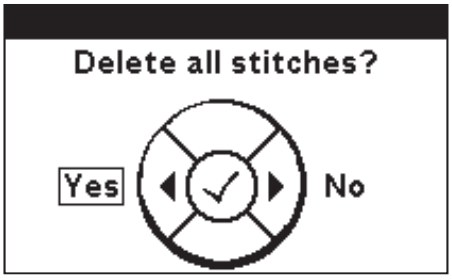

Combining text with decorative stitches

To combine your text sequence with decorative stitches, return to sequencing by selecting the sewing mode tab (B).

Move the cursor through the text and insert the decorative stitches as desired.

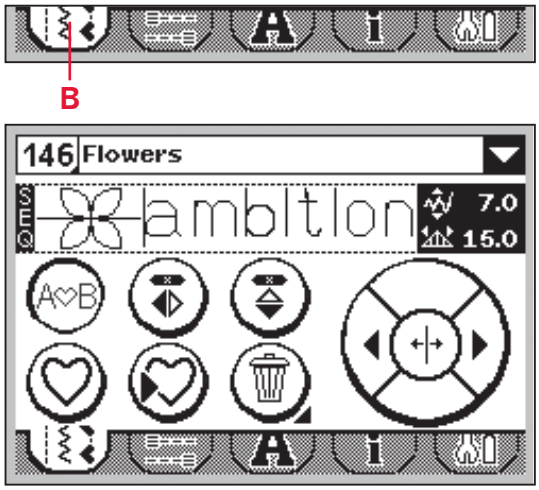

1.5

Manage your sequences

You can save and reload your sequences. There are four memories where you can save your sequences.

Save sequence

Select save (8) to open the save sequence menu. Select one of the four memories. Selected memory number is surrounded by a frame. Confirm your selection by pressing OK (C).

If the memory is occupied, a pop-up message will appear asking if you wish to overwrite the previously saved stitch with the new one. Select OK/yes (C) to overwrite, or cancel/no (D) to close the popup without saving.

For 1.5: To close the save sequence menu touch cancel (D).

For 1.0: To close the save sequence menu press the save button (8).

ambition™ 1.5

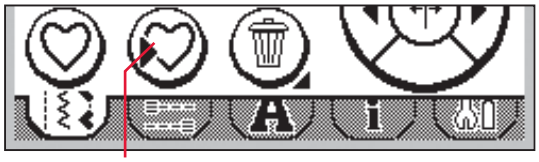

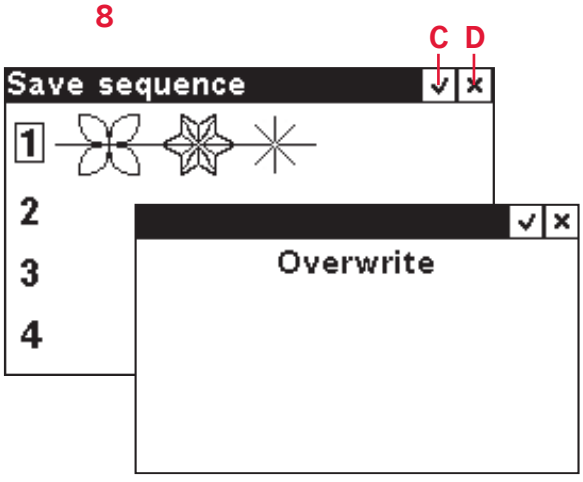

ambition™ 1.0

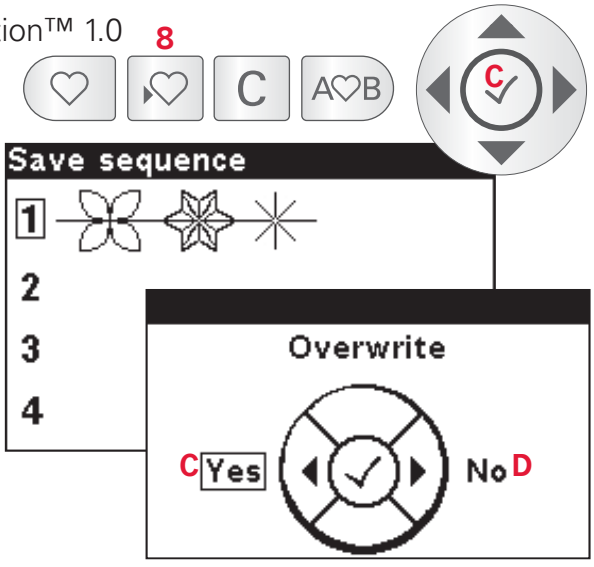

Load sequence

Select load (7) to open the load sequence menu. Select the sequence you want to load. Selected memory number is surrounded by a frame. Confirm your selection by pressing OK (C).

The sequence will appear in sewing mode ready to be sewn out.

For 1.5: To exit the load sequence menu without loading, touch cancel (D).

For 1.0: To exit the load sequence menu without loading, press the load button (7).

ambition™ 1.5

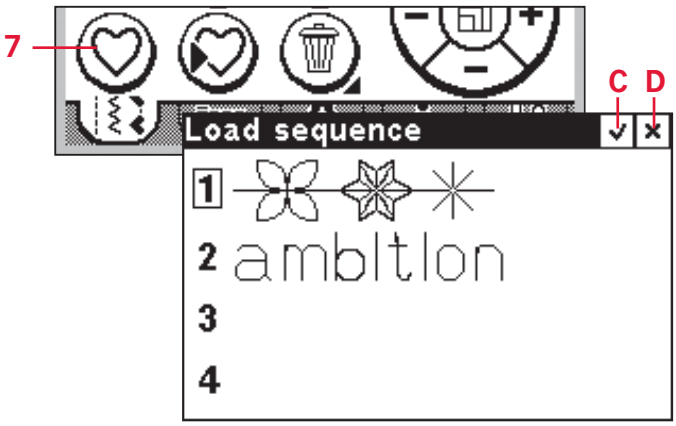

ambition™ 1.0

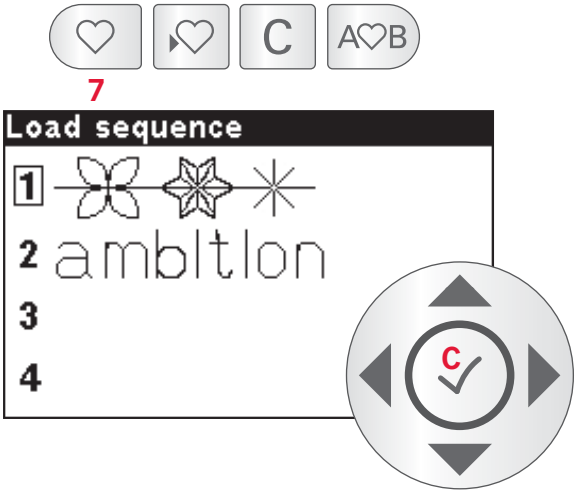

Sewing a sequence

To sew the sequence, return to sewing mode by pressing the sequencing button (4) or step on the foot control. Your sequence is ready to be sewn out. The sequence will be sewn continuously.

To sew only one repetition of your sequence, add a tie-off at the end, see page 3:5.

Note: Adjustments made in sewing mode will affect the whole sequence. However, these adjustments will not be saved if you return to sequencing.

ambition™ 1.5

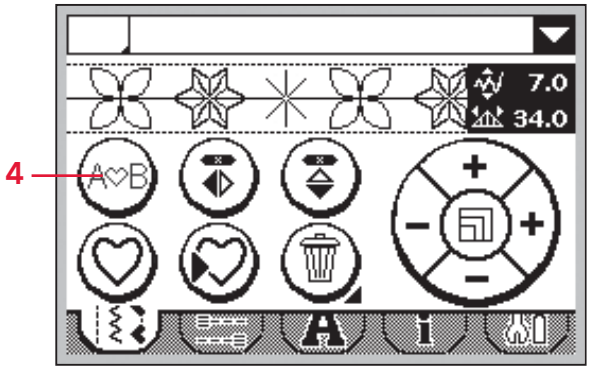

ambition™ 1.0

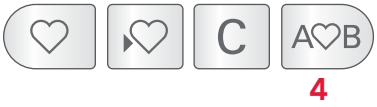

Maintenance

Cleaning the machine

To keep your sewing machine operating well, clean it often. No lubrication (oiling) is needed.

Wipe the exterior surface of your machine with a soft cloth to remove any dust or lint built up.

Wipe the screen with a clean, soft and damp cloth.

Cleaning the bobbin area

Note: Raise the needle, lower the feed dogs and turn off the machine.

Remove the presser foot. Push the bobbin cover release button (A) to the right and remove the bobbin cover (B) and the bobbin. Use the screwdriver to remove the two screws (C) in the stitch plate. Lift up the stitch plate.

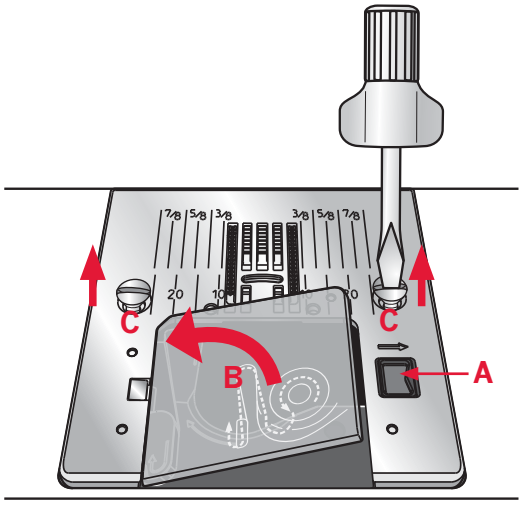

Clean the feed dogs and the bobbin area with the brush found with the accessories.

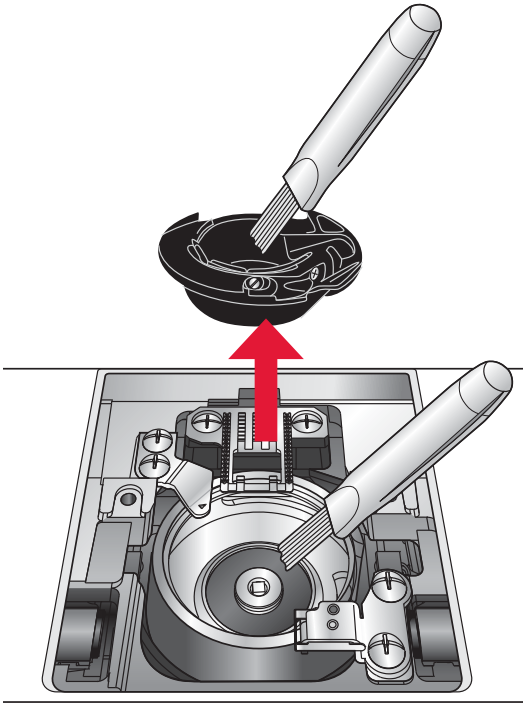

Cleaning under the bobbin area

Clean the area under the bobbin case after sewing several projects or any time you notice an accumulation of lint in the bobbin case area.

Remove the bobbin case by lifting it up. Clean the area with the brush or with a dry cloth.

Put the bobbin case back into the hook race so that the tip fits into the stopper (D).

Note: Do not blow air into the bobbin case area. The dust and lint will be blown into your machine.

Replacing the stitch plate

With the feed dogs lowered, replace the stitch plate and insert and tighten the two stitch plate screws. Replace the bobbin cover.

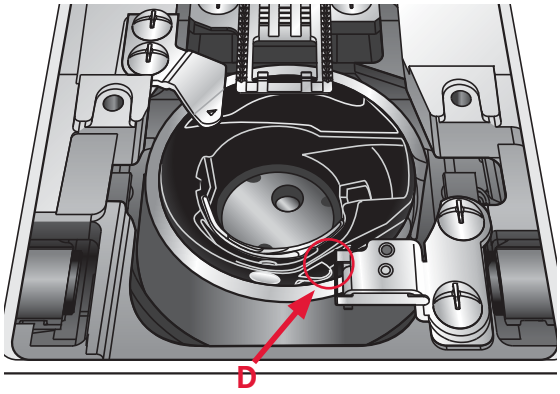

Troubleshooting

In this troubleshooting guide you will find solutions to the problems you may have with your machine. For further information please contact your local authorized PFAFF® dealer.

Problem/cause	Remedy
General problems	
Bobbin alarm does not work? (1.5)	Clean lint from bobbin area.
Fabric does not move?	Make sure that the feed dogs are not lowered.
Wrong stitch, irregular or narrow stitch?	Deactivate twin needle or stitch width safety in the settings menu.
The needle breaks?	Insert needle correctly, see page 2:9. Attach correct needle for the fabric.
The machine will not sew?	Check that all plugs are securely plugged into the machine and into the wall socket. Push bobbin winder lever to sewing position.
The sewing machine function buttons do not respond to touch?	The sockets and function buttons on the machine can be sensitive to static electricity. If the buttons do not respond to touch, turn the machine OFF and then ON again. If the problem persists, contact your local authorized PFAFF® dealer.
Icons on the screen are not activated when touched? (1.5)	Calibrate the screen. Calibrate is found in the settings menu.

The machine skips stitches	
Did you insert the needle properly?	Insert needle correctly, see page 2:9.
Did you insert a wrong needle?	Use needle system 130/750 H.
Is the needle bent or blunt?	Insert a new needle.
Did you thread the machine properly?	Check how the machine is threaded.
Is the correct presser foot used?	Attach correct presser foot.
Is the needle too small for the thread?	Make sure the needle is correct for the thread and fabric.

Needle thread breaks	
Did you insert the needle properly?	Insert needle correctly, see page 2:9.
Did you insert a wrong needle?	Use needle system 130/750 H.
Is the needle bent or blunt?	Insert a new needle.
Did you thread the machine properly?	Check how the machine is threaded.
Is the needle too small for the thread?	Change the needle to the proper size for the thread.
Are you using poor thread with slubs or thread which has become dry?	Change to a new higher quality thread purchased from an authorized PFAFF® dealer.
Is a correct spool cap used?	Attach a spool cap of the right size for the actual thread spool.
Is the best spool pin position used?	Try a different spool pin position (vertical or horizontal).
Is the stitch plate hole damaged?	Change the stitch plate.

Bobbin thread breaks	
Did you insert the bobbin properly?	Check the bobbin thread.
Is the stitch plate hole damaged?	Change the stitch plate.
Is the bobbin area clean?	Clean lint from bobbin area.
Is the bobbin wound correctly?	Wind a new bobbin.

The seam has uneven stitches	
Is the thread tension correct?	Check needle thread tension and the threading.
Are you using too thick or slubbed thread?	Change the thread.
Is the bobbin thread evenly wound?	Check bobbin winding.
Is a correct needle used?	Insert a proper needle correctly, see page 2:9.

The machine does not feed or feeds irregularly	
Did you thread the machine properly?	Check how the machine is threaded.
Has sewing lint collected between the feed dogs?	Remove the stitch plate and clean the feed dogs with a brush.

Have your sewing machine serviced regularly by your local authorized PFAFF® dealer!

If you have followed this trouble shooting information and still have problems, take your sewing machine to your dealer. If there is a specific problem, it is a great help to test sew with your thread on a scrap of your sewing fabric and bring it to your dealer. A sewing sample will often provide helpful information.

Non-original parts and accessories

The warranty does not cover any defect or damage caused by use of non-original accessories or parts.

Index

A

Accessories 1:6
Accessory tray 1:5
Alphabet mode 2:11, 2:13, 4:2, 4:3
Alphabets 1:10
Auxiliary spool pin 1:6, 2:3

B

Base plate height, adjust 2:2
Blindhem 3:11
Bobbin empty 3:12
Bobbin, insert 2:6
Bobbins 1:6
Bobbin winding 2:5
Brush 1:6
Buttonhole 3:7
  Buttonhole foot 5B 1:6, 3:7, 3:8, 3:9
  Corded buttonhole 3:8
Buttons
  Buttons for ambition™ 1.0 machine 2:12
  Buttons for ambition™ 1.5 machine 2:10
Button, sew on 3:8

C

Calibrate touch screen 2:14
Changing the needle 2:9
Changing the presser foot 2:9
Character set 4:2, 4:3
Combining text with decorative stitches 4:5
Connect the foot control 2:1
Connect to the power supply 2:1
Contrast 2:14, 2:15
Corded buttonhole 3:8
Create a sequence 4:1
Create a text 4:2, 4:3
Cursor, move 4:1

D

Darning 3:9
Decorative stitches 1:9
Delete 2:11, 2:13, 4:4
Delete stitches or letters in a sequence 4:4
Direct selection 2:11, 2:13
Display contrast 2:14, 2:15
Dual feed 2:6

E

Edge guide 1:6
Elongation 2:11, 2:13, 3:4

F

Feed dogs, lower 2:9
Felt pad 1:6, 2:3, 2:4
Foot control 2:1
Free arm 2:2

G

Graphic Display on ambition™ 1.0 machine 2:13

H

Hems 3:9

I

IDT™ system 1:5, 1:6, 2:6, 3:1, 3:2, 3:10, 3:11
  Disengage 2:6
  Engage 2:6
Immediate tie-off 2:10, 2:12, 3:5
Inserting the bobbin 2:6
Intellectual property 5:5

L

Language 2:14, 2:15
Leveling the machine base plate 2:2
Load personal stitch 3:6
Load personal stitch or sequence 2:11, 2:13
Load sequence 4:6
Lowering feed dogs 2:9

M

Machine overview 1:4
  Accessory tray 1:5
  Front side 1:4
  Included accessories 1:6
  Presser feet 1:6
  Rear side 1:5
  Top parts 1:5
Main switch 2:1
Manage your sequences 4:5
Memory 2:11, 2:13, 4:5, 4:6
Mending 3:9
Mirror end to end 2:11, 2:13
Mirroring 3:4
Mirror side to side 2:11, 2:13
Motor overload 3:12
Mounting machine in sewing cabinet 2:2
Move cursor 4:1
Multi-purpose tool 1:6, 2:9, 3:8, 3:9

N

Needle art stitches 1:9
Needle, changing 2:9
Needles 2:8
Needle threader 2:4
Needle up/down 2:10, 2:12
Non-original parts and accessories 5:3

O

OK button 2:13
One step Buttonhole Foot 5B 3:7
ON/OFF 2:1
Optional accessories 2:4, 3:1, 3:2, 3:8, 3:10

P

Pack away after sewing 2:1
Pop-ups 3:12
Presser feet 1:6
Presser foot
- Attach 2:9
- Change 2:9
- Pressure 2:7
- Remove 2:9

Presser foot lift 2:9
Presser foot pressure 2:7
Problem/cause 5:2
Programmed tie-off 2:10, 2:12, 3:5

Q

Quilting 3:10
Quilt stitches 1:9

R

Recycling 5:5
Reverse 2:10, 2:12
Reverse indicator 2:10, 2:12

S

Satin stitches 1:9, 3:3, 3:4
Save personal stitch 3:6
Save personal stitch or sequence 2:11, 2:13
Save sequence 4:5
Screen settings 2:14
Screwdriver 1:6, 5:1
Seam ripper 1:6
Select a stitch 3:1, 3:2
Select character set 4:2
Sequence
- Create 4:1
- Load 4:6
- Save 4:5
- Sewing 4:6

Sequencing 2:11, 2:13
Sequencing overview 4:1
Settings & functions tabs 2:11, 2:13
Settings menu 2:11, 2:13, 2:14, 2:15
Sewing a sequence 4:6
Sewing cabinet, mounting machine in 2:2
Sewing mode 2:11, 2:13
Sewing mode - overview (1.0) 3:2
Sewing mode - overview (1.5) 3:1
Sewing speed 2:10, 2:12
Sewing techniques 3:7–3:11
- Blindhem 3:11
- Buttonholes 3:7
- Darning and mending 3:9
- Quilting 3:10
- Sewing hems in heavy fabric 3:9
- Sewing in zippers 3:11
- Sew on a button 3:8
- Three-step zigzag stitch 3:7

Sewing techniques stitches 1:9
Sew on a button 3:8
Software version 2:14, 2:15
Sound, warning 2:14, 3:3, 3:4
Speed control lever 2:10, 2:12
Spool cap 1:6, 2:2, 2:3, 2:4, 2:5
Spool pins 2:2
- Auxiliary spool pin 2:3
- Horizontal position 2:2
- Vertical position 2:3

Start/stop 2:10, 2:12
Stitch adjustments 3:3, 4:4
- Stitch density 3:3
- Stitch length 3:3
- Stitch positioning 3:3
- Stitch width 3:3

Stitch density 2:11, 2:12, 3:3
Stitch information 2:11, 2:13, 3:2
Stitch length 2:11, 2:12, 3:3
Stitch overview 1:7
- Alphabets 1:10
- Decorative stitches 1:9
- Needle art stitches 1:9
- Quilt stitches 1:9
- Satin stitches 1:9
- Sewing techniques stitches 1:9
- Utility stitches 1:7

Stitch plate 2:6, 2:8, 2:14, 2:15, 5:1
Stitch positioning 2:11, 2:12, 3:3
Stitch restart 2:10, 2:12
Stitch selection 3:1, 3:2
Stitch width 2:11, 2:12, 3:3
Stitch width safety 2:14, 2:15
Stylus 1:5, 1:6, 2:14

T

Tabs 2:11, 2:13
Text, create 4:2, 4:3
Thread cutter..... 2:2
Threading the machine..... 2:3–2:4
  Needle threader 2:4
  Threading for twin needle 2:4
Thread tension..... 2:7, 3:4
  Adjust 2:7
  Dial 2:7
Three-step zigzag stitch..... 3:7
Tie-off options..... 2:10, 2:11, 2:12, 2:13, 3:5
Tie-off, programmed 2:10, 2:12
Touch screen calibration 2:14
Touch screen for ambition™ 1.5 machine 2:11
Touch wheel..... 2:11
Troubleshooting 5:2
Twin needle
  Set for twin needle 2:14, 2:15
  Threading for twin needle 2:4

U

Unpacking 2:1
Utility stitches 1:7–1:8

W

Warning sound 2:14, 3:3, 3:4
Wheel 2:13

Z

Zippers..... 3:11

We reserve the right to change the machine equipment and the assortment of accessories without prior notice, or make modifications to the performance or design.

Such modifications, however, will always be to the benefit of the user and the product.

Intellectual property

PFAFF, AMBITION and IDT (image) are trademarks of KSIN Luxembourg II, S.ar.l.

Please note that on disposal, this product must be safely recycled in accordance with relevant National legislation relating to electrical/electronic products. If in doubt please contact your retailer for guidance.

www.pfaff.com

413 29 91-26D • English • InHouse • © 2011 KSIN Luxembourg II, S.ar.l. • All rights reserved • Printed in China on environmentally-friendly paper