PFAFF

Perfection starts here.™

admire™ air 6000

User's Guide

www.sewshop.eu

IMPORTANT SAFETY INSTRUCTIONS

Read all instructions before using this household sewing machine.

When using an electrical appliance, basic safety precautions should always be followed, including the following:

Keep the instructions at a suitable place close to the machine. Make sure to hand them over if the machine is given to a third party.

This appliance is intended for use by adults. The appliance can be used with adult supervision by (i) children aged from 8 to 12 years and (ii) persons with reduced physical, sensory or mental capabilities or lack of experience and knowledge if they have been given instruction concerning use of the appliance in a safe way and understand the hazards involved. Cleaning and user maintenance shall not be made by children without supervision. It is not allowed for anyone to play with the machine. Children up to 8 years are not allowed to use the machine.

DANGER - TO REDUCE THE RISK OF ELECTRIC SHOCK:

- A sewing machine should never be left unattended when plugged in. The electrical socket, to which the machine is plugged in should be easily accessible. Always unplug this sewing machine from the electric outlet immediately after using and before cleaning, removing covers, lubricating or when making any other user servicing adjustments mentioned in the instruction manual.

WARNING –TO REDUCE THE RISK OF BURNS, FIRE, ELECTRIC SHOCK, OR INJURY TO PERSON:

- Do not allow to be used as a toy. Close attention is necessary when this sewing machine is used by or near children.
- Use this sewing machine only for its intended use as described in this manual. Use only attachments recommended by the manufacturer as contained in this manual.
- Never operate this sewing machine if it has a damaged cord or plug, if it is not working properly, if it has been dropped or damaged, or dropped into water. Return the sewing machine to the nearest authorized dealer or service center for examination, repair, electrical or mechanical adjustment.
- Never operate the sewing machine with any air openings blocked. Keep ventilation openings of the sewing machine and foot control free from the accumulation of lint, dust, and loose cloth.
- Keep fingers away from all moving parts. Special care is required around the sewing machine needle.
- Always use the proper needle plate. The wrong plate can cause the needle to break.
- Do not use bent needles.
- Do not pull or push fabric while stitching. It may deflect the needle causing it to break.
- Wear safety glasses.
- Switch the sewing machine off (“0”) when making any adjustment in the needle area, such as threading needle, changing needle, threading bobbin, or changing presser foot, etc.
- Never drop or insert any object into any opening.
- Do not use outdoors.
- Do not operate where aerosol (spray) products are being used or where oxygen is being administrated.
- To disconnect, turn all controls to the off (“0”) position, then remove plug from outlet.
- Do not unplug by pulling on cord. To unplug, grasp the plug, not the cord.

www.sewshop.eu

- The foot control is used to operate the machine. Never place other objects on the foot control.
- Do not use the machine if it is wet.
- If the LED lamp is damaged or broken, it must be replaced by the manufacturer or its service agent or a similarly qualified person, in order to avoid a hazard.
- If the cord connected with the foot control is damaged, it must be replaced by the manufacturer or its service agent or a similarly qualified person, in order to avoid a hazard.

For Overlock Machines only:

- Never operate without a cutter cover or a securely installed coverstitch table.

SAVE THESE INSTRUCTIONS

www.sewshop.eu

TABLE OF CONTENTS

1 Introduction 5
Machine Overview 5
Front and Side of Machine 5
Inside of Machine 6
Needle Area 7
Accessories 7

2 Preparations 8
Connect Foot Control and Power Supply 8
Before Using Your Machine for the First Time 8
Mount the Spool Stand 9
Mount the Telescopic Thread Stand 9
Waste Tray 9
Knee Lifter 10
Front Cover 10
Flat Bed Extension / Free Arm 10
Attach the Extension Table 11
Change Between Cutter Cover A and Coverstitch Table B 11
Presser Foot Lift 11
Change the Presser Foot 12
Needle Information 13
Checking the Needles 13
Change the Needles 13
Upper Cutter Position 14
2–Thread Overlock Converter 14
Upper Looper Position 15
Threading/Sewing Lever 15
Stitch Finger Lever 15
Stitch Selection Dial 16
Thread Tension Fine Tuning Levers 16

3 Threading 17
General Threading Information 17
What Needle and Thread to Use 17
Placing the Thread Spools on the Spool Pins 18
Changing Thread 18
Threading the Needles 19
Threading the Left Overlock Needle (A) 19
Threading the Right Overlock Needle (B) 20
Threading the Chainstitch Needle (D) 21
Threading the Coverstitch Needles 22
Needle Threader 25
Threading the Loopers 26
Threading the Upper Looper 26
Threading the Lower Looper 27
Threading the Chainstitch Looper 28
Threading Specialty Threads 29

4 Stitches and Sewing Techniques 30
Stitch Overview 30
Start Sewing 37
Pin Placement 37
Securing the Thread Chain 37
Cutting the Seams Open 38
Rolled Edge Sewing 39
2–Thread Rolled Edge 39
3–Thread Rolled Edge/Narrow Edge 39
Flatlock Sewing 40
Standard Flatlock, Wide 40
Decorative Flatlock, Wide 40
Ladder Stitch 40
Coverstitch Sewing 41
Machine Set Up 41
Start Sewing 41
Securing the Coverstitch Seam End 41
Chainstitch Sewing 42
Machine Set Up 42
Start and End Sewing 42
Sewing Tips & Hints 42
Sewing with Decorative Thread in the Loopers 42
Gathering with Differential Feed 42
Sewing Corners 43
Circular Sewing 44

5 Stitch Adjustments 45
Presser Foot Pressure 45
Stitch Width Adjustment 45
Adjustment Using Needle Position 45
Adjustment Using Cutting Width Dial 45
Stitch Length Adjustments 46
Differential Feed Adjustment 46
Thread Tension 47
Correct Tension 47
Upper Looper Tension 47
Lower Looper Tension 47
Left Needle Tension 47
Right Needle Tension 47

6 Maintenance 48
Cleaning 48
Cleaning the Looper Area 48
Cleaning the Looper Threading Pipes 48
Oiling 49
Replace the Upper Cutter 49
Storage 49
Servicing 49
Trouble Shooting 50
Technical Specifications 53

www.sewshop.eu

1 Introduction

Machine Overview

Front and Side of Machine

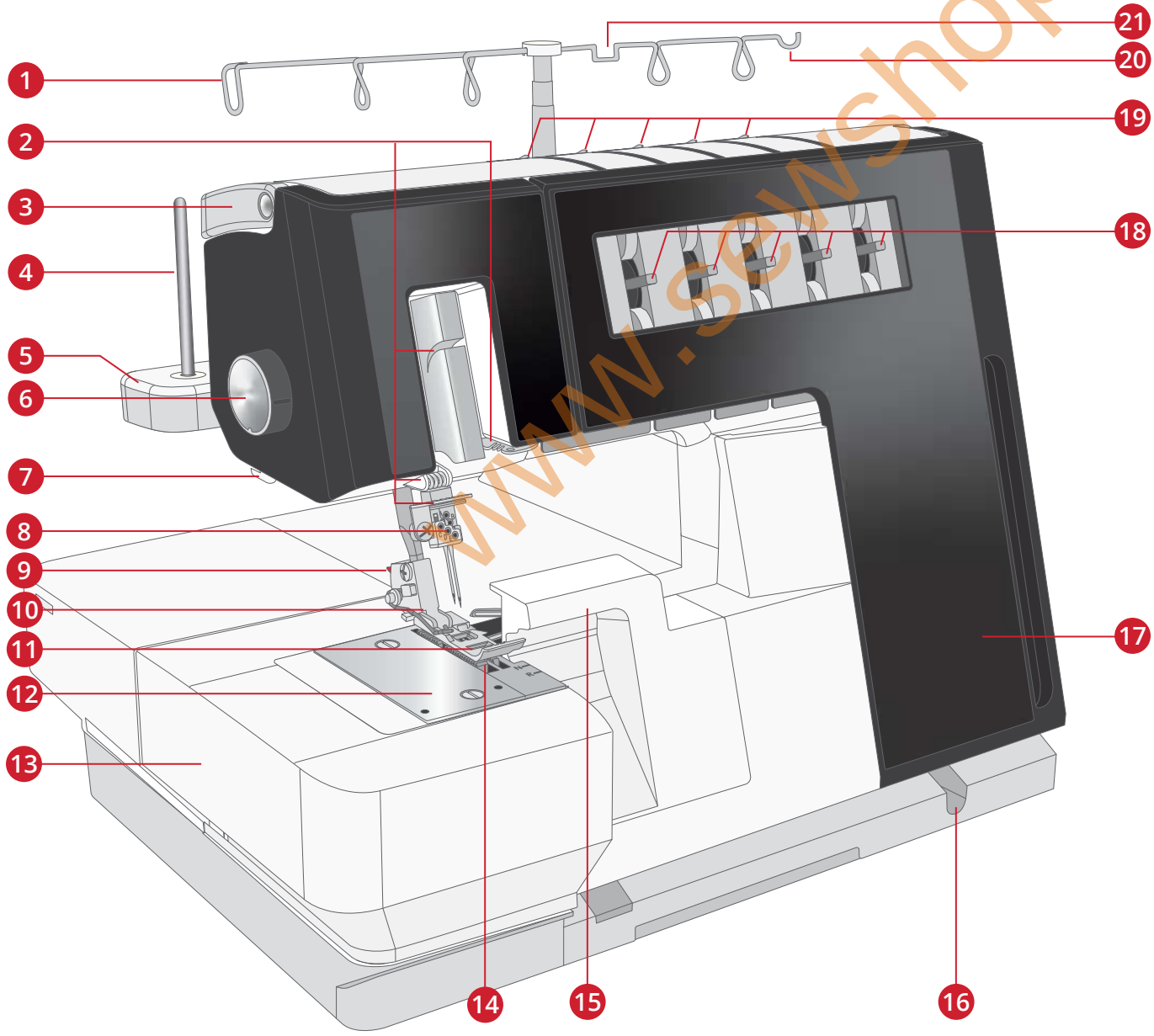

www.sewshop.eu

1. Telescopic thread stand
2. Thread guides
3. Handle
4. Spool pin
5. Spool stand
6. Presser foot pressure dial
7. Thread knife
8. Needle clamp
9. Presser foot release button
10. Presser foot ankle
11. Presser foot
12. Stitch plate
13. Flat bed extension
14. Feed teeth
15. Cutter cover A
16. Socket for knee-lift
17. Front cover
18. Thread tension fine tuning
19. Pre-tension thread guides
20. To hang a small scissors
21. To hang a tweezer

Inside of Machine

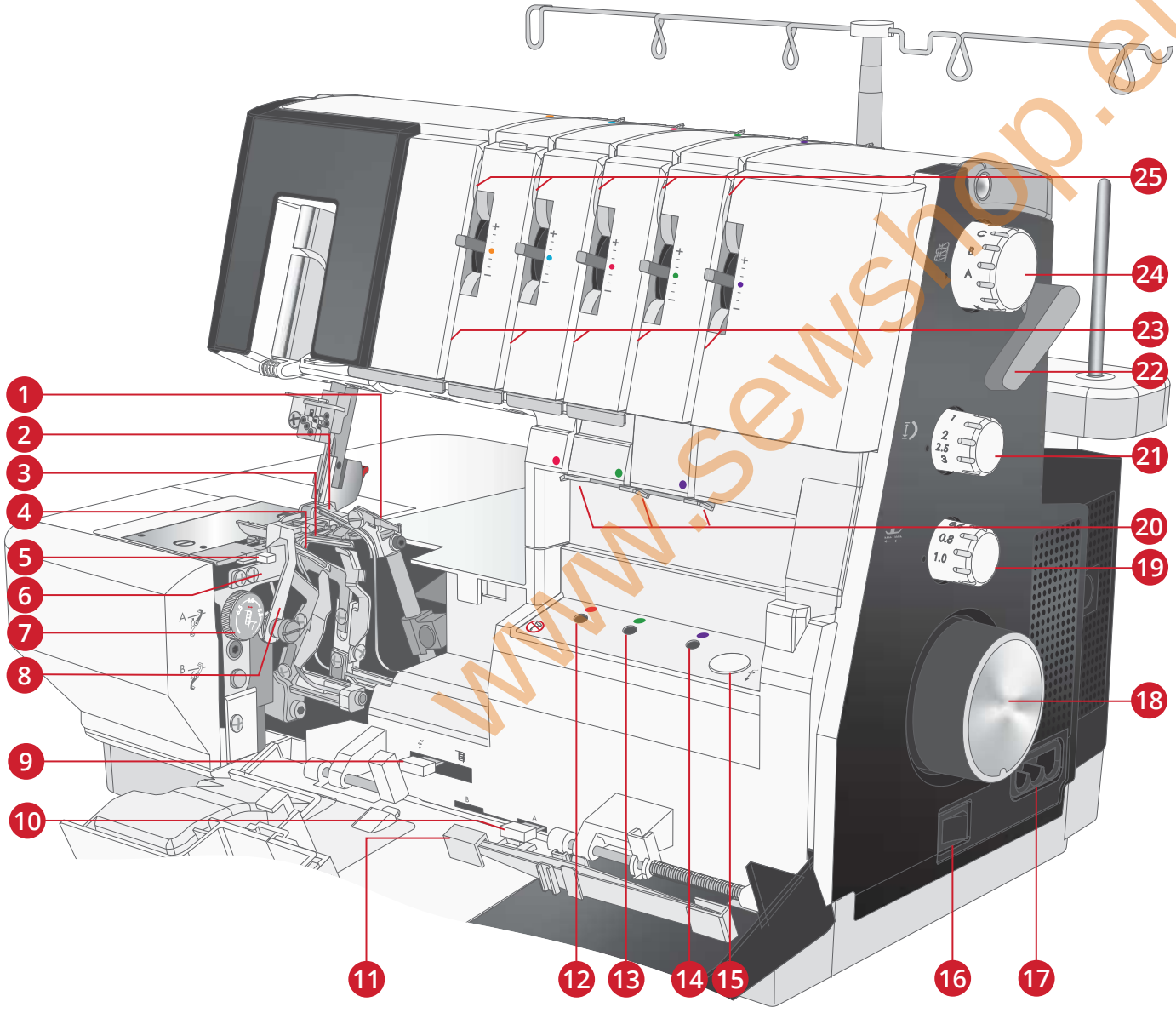

www.sewshop.eu

1. 2–thread converter
2. Upper looper
3. Lower looper
4. Chainstitch/Coverstitch looper
5. Stitch finger lever
6. Stationary cutter
7. Cutting width dial
8. Upper cutter
9. Threading/Sewing lever
10. Upper looper position lever
11. Storage for tweezers
12. Upper looper threading hole
13. Lower looper threading hole
14. Chainstitch/Coverstitch looper threading hole
15. Threading button
16. On/Off switch
17. Power and foot control socket
18. Handwheel
19. Differential feed dial
20. Looper thread guides
21. Stitch length dial
22. Presser foot lifter
23. Threading slots
24. Stitch selection dial
25. Tension discs

Needle Area

A. Left Overlock Needle

B. Right Overlock Needle

C. Left Coverstitch Needle

D. Middle Coverstitch Needle/Chainstitch Needle

E. Right Coverstitch

Note: When using two needles, the left needle is positioned a little higher up than the right needle (they are not supposed to be level).

When using three needles, such as when sewing a triple coverstitch, the center needle is a little higher up than the right needle, and the left needle is a little higher up that the center needle (they are not supposed to be level with one another).

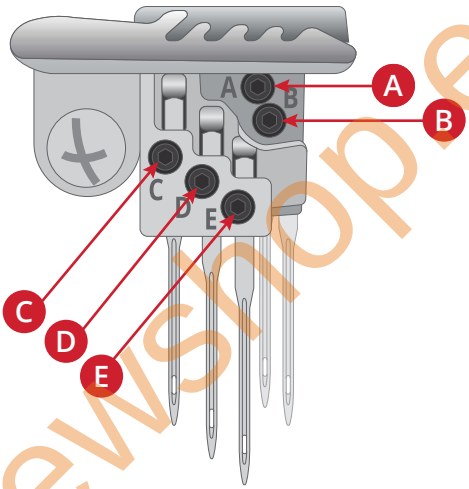

Accessories

1. Spool holder x 5
2. Spool cap x 5
3. Thread net x 5
4. Tweezer
5. Needle threader
6. Allen key
7. Screw driver
8. Brush
9. Sewing machine oil
10. Knife blade for upper cutter
11. Coverstitch table B
12. Knee-lifter
13. Accessory box
14. Threading wire
15. Foot control
16. Pivot Pin, used for circular sewing
17. Waste tray (not pictured)
18. Soft dust cover (not pictured)
19. Needle pack (not pictured)
20. Extension table (not pictured)

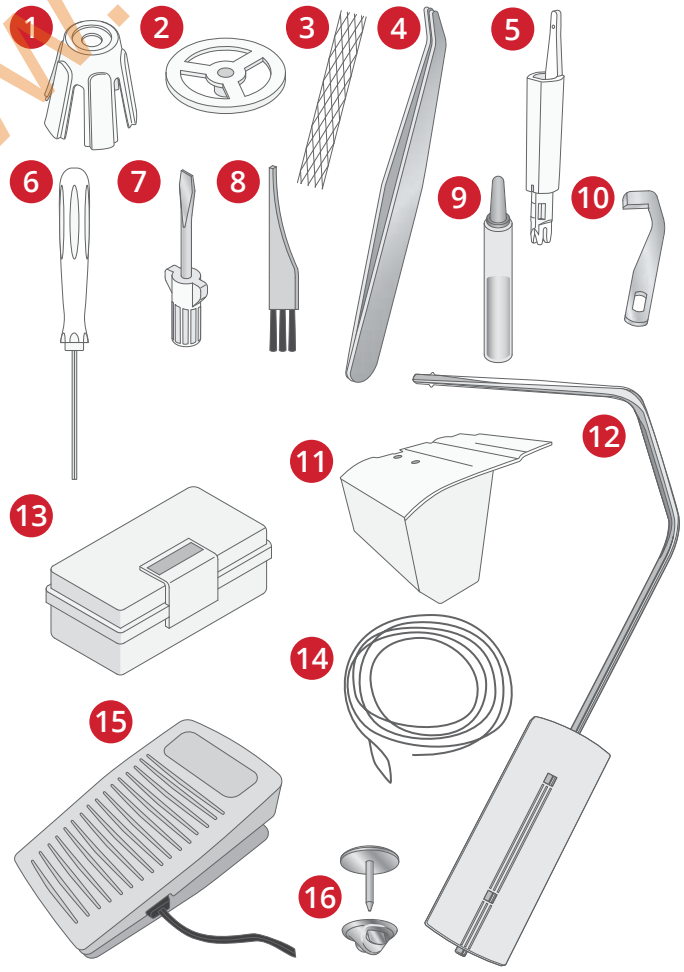

www.sewshop.eu

2 Preparations

Connect Foot Control and Power Supply

Among the accessories you will find the foot control/ electric power cord.

Foot control to use with this machine:
For USA/Canada: Type 4C-345B22
For Europe: Type 4C-345G22
For UK: Type 4C-345C25
For Australia: Type 4C-345C23
Manufactured by WAKAHO Electric Industrial Co., Ltd, Taiwan

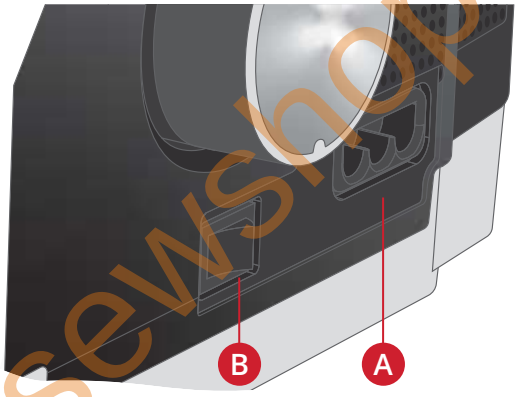

Connect the foot control/electric power cord to the socket on the bottom right side of the machine (A).

Plug the power cord into the wall socket.

Before plugging your machine in, make sure the voltage is the same as indicated on the plate under the machine. Specifications vary from country to country.

Press the ON/OFF switch to ON to turn on power and light (B).

Press the foot control to start sewing. Use the foot control to adjust the sewing speed. The harder you press, the faster the machine will sew. To stop the machine from sewing, remove your foot from the control.

Note: On the side of the foot control is a speed control slide for selecting full or half speed. If you press the foot control to the bottom, the machine runs at the maximum speed set by the speed control slide.

Note: When the front cover is open the safety switch is activated and prevents the machine from sewing, even if the foot control is pressed.

Note: Your machine is adjusted to provide the best stitch result at normal room temperature. Extreme hot and cold temperatures can affect the sewn result.

Before Using Your Machine for the First Time

Before using your machine for the first time, place a scrap of fabric under the presser foot and run the machine without thread for a few minutes. Wipe away any oil which may appear.

www.sewshop.eu

Mount the Spool Stand

Insert the two pins of the spool stand (A) into the slots (B) at the back of the machine.

Push the spool stand to the right to lock in place (C).

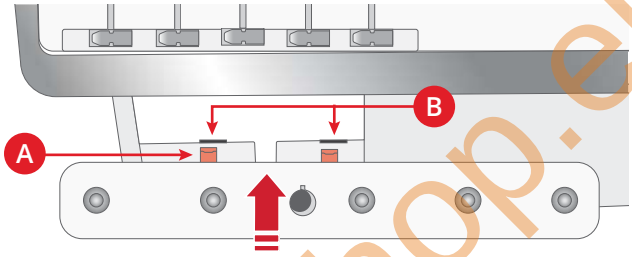

Machine from above

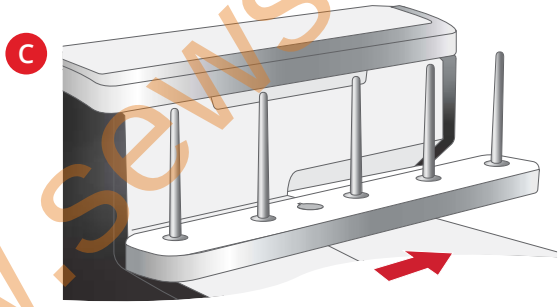

Mount the Telescopic Thread Stand

Insert the telescopic thread guide into the socket on the thread stand (A). Match the knob on the thread guide (B) with the slot (C) in the thread stand. Extend the telescopic thread stand to its full height, then turn until it clicks into place.

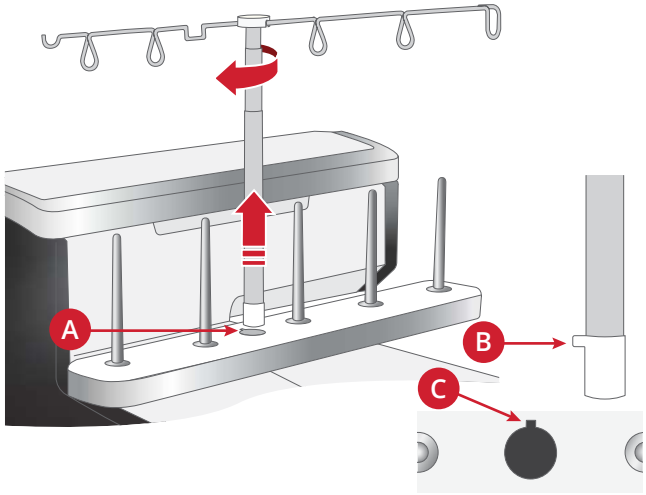

Waste Tray

The waste tray collects trimmings. Make sure the trim falls into the tray while sewing. Empty the tray after sewing.

Place the tray along the edge of the flat bed extension (A). Push the waste tray towards the front cover inserting the tabs into the slit under the front cover (B). Push until it clicks in place.

Pull the waste tray toward you to remove it.

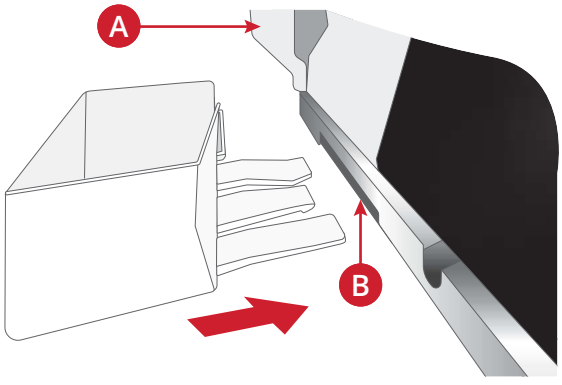

www.sewshop.eu

Knee Lifter

Your machine comes with a knee-lifter that allows you to lift the presser foot with your knee. This is very helpful when sewing, since it allows you to handle the fabric with your hands while your knee lifts the presser foot.

Match the ribs on your knee-lifter with the notches in the knee-lifter socket (A). Carefully push the knee-lifter into the socket. Adjust the rectangular bar on the knee-lift until it is positioned at a comfortable height for you (B).

Press your knee towards the knee-lifter and to the right, and the presser foot will raise. You can raise the presser foot to two positions; up and extra lift position.

To remove the knee-lift, just pull it straight out of the socket.

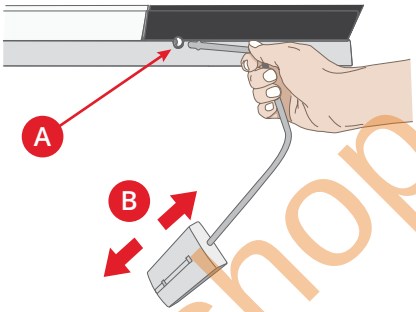

Front Cover

Open by pushing the cover to the right (1) as far as it will go and then pull it toward you (2).

Close it again by pulling the cover upward and then sliding it to the left until it locks.

Note: The Threading/Sewing lever must be set in sewing position to be able to close the front cover.

Note: The front cover has a safety switch and the machine will not sew if the front cover is open.

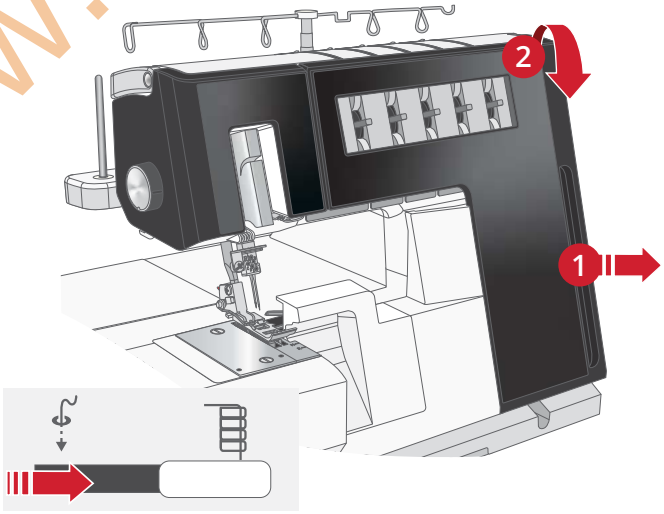

Set the machine in sewing position before closing the cover

Flat Bed Extension / Free Arm

To use free arm, remove the flat bed extension. The free arm is convenient for sewing trousers legs and other small areas such as children's garments.

Pull the flat bed extension to the left to remove it.

To attach it again, place it around the free arm and push it back to the right, until it clicks in place.

Note: The flat bed extension cover must also be removed to attach the extension table.

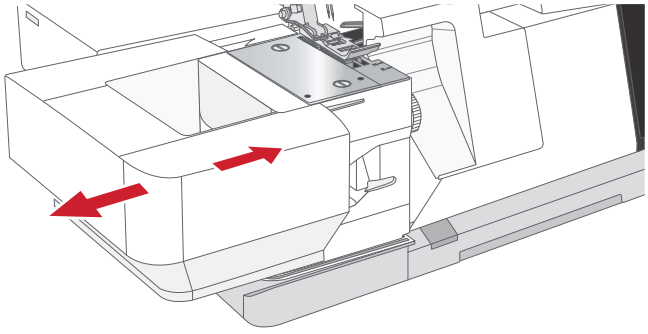

www.sewshop.eu

Attach the Extension Table

To use the extension table, remove the flat bed extension cover (see Flat Bed Extension / Free Arm).

1. Fold out the legs of the extension table.
2. Place the extension table around the free arm. Fit the pin (A) of the extension table into the corresponding hole on the machine. Push the extension table towards the machine to lock it in place.
3. If needed, turn the leveling screws at the bottom of the legs to make the extension table stand sturdy.

To remove the extension table, carefully push it to the left.

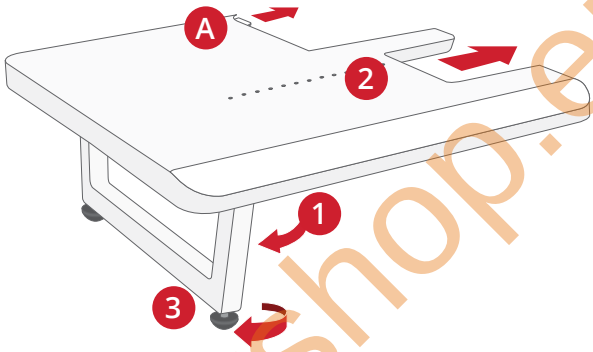

Change Between Cutter Cover A and Coverstitch Table B

For coverstitch and chainstitch sewing Coverstitch Table B should be used. You can easily change between Cutter Cover A (mounted upon delivery) and Coverstitch Table B.

Open the front cover.

Push the release lever (A) down and pull Cutter Cover A towards you to remove it.

Place Coverstitch Table B underneath the front lid. Slide the release lever, from above, into the slot in the front cover (B). Fit the two pins (C) of Coverstitch Table B, from underneath, into the holes (D) of the cover.

Push towards the front cover until the release lever clicks in place into the slot on the front cover (E).

Note: Whether you are using Cutter Cover A or Coverstitch Table B, they are attached and removed in the same way.

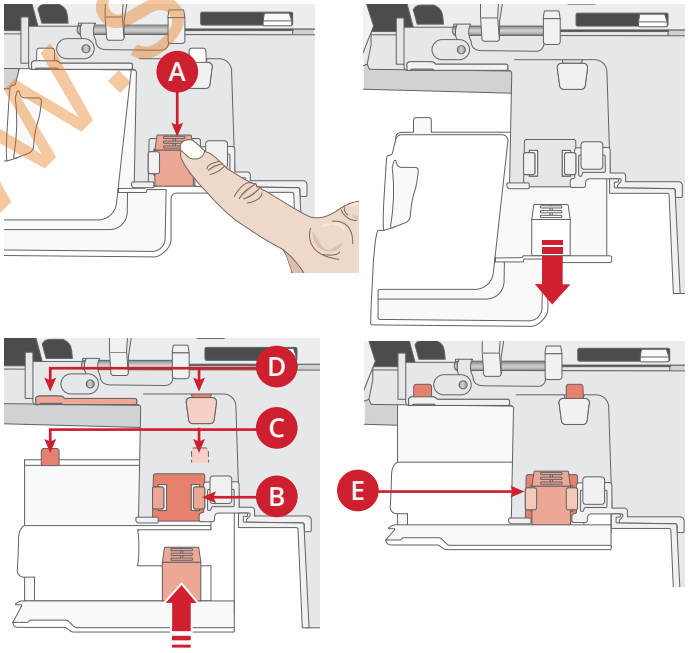

Presser Foot Lift

Raise the presser foot by raising the presser foot lifter (A) at the right side of the machine. Pressing the lifter up puts the presser foot in extra lift position.

Always raise the presser foot lifter when threading. When raised, the tension disks open and the threading becomes easier.

Note: The machine will not sew if the presser foot is raised. Lower the presser foot before starting to sew.

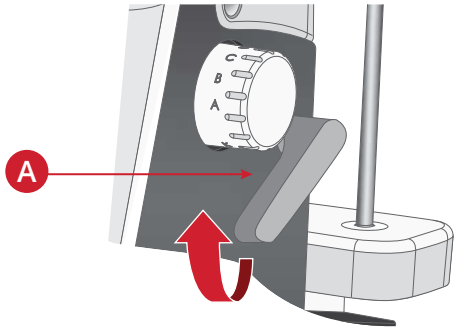

www.sewshop.eu

Change the Presser Foot

Turn off the main power switch and unplug the machine.

Raise the presser foot.

Turn the handwheel toward you until the needles are at the highest position.

Push the red button (A) on the back of the presser foot ankle to release the presser foot.

Raise the presser foot to the extra lift position and the foot will come off.

Place the new foot with the pin right underneath the groove of the ankle while in the extra lift position (B). Lower the presser foot and the foot will snap in place.

Tip: If you find it difficult to snap on the presser foot, push the red button on the back of the ankle when lowering the foot (C).

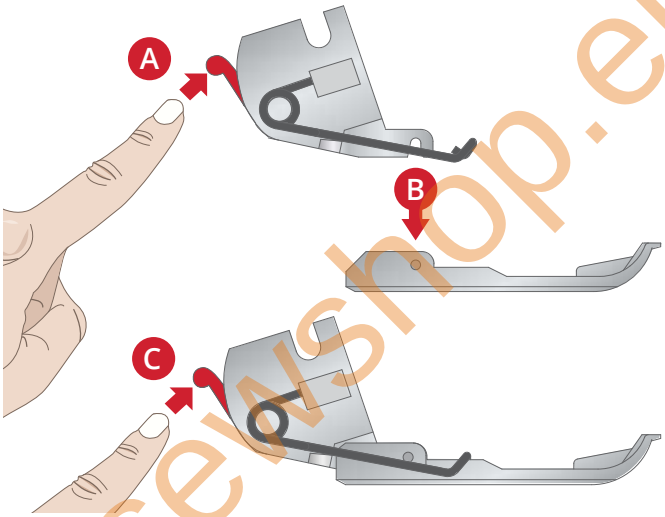

www.sewshop.eu

Needle Information

This overlock uses a flat shank industrial needle that eliminates the possibility of inserting the needle backwards.

Do not attempt to use a standard household sewing machine needle of any size or type in this overlock.

Use PFAFF® needles EL x 705 sizes 14/90 and 12/80, supplied with this machine.

You can sew using one, two or three needles depending on what stitch to use.

Note: When using two needles, the left needle is positioned a little higher up than the right needle (they are not supposed to be 'level', like a twin needle).

Checking the Needles

To make sure the needle is not bent, place the flat side of the needle onto something flat (needle plate, glass etc.). The gap between the needle and the flat surface should be consistent. Never use a bent or blunt needle.

Change the Needles

⚠ *Turn off the main power switch and unplug the machine.*

6-8 Change the needle often. As a general rule, needles should be changed every 6-8 hours of actual stitching time.

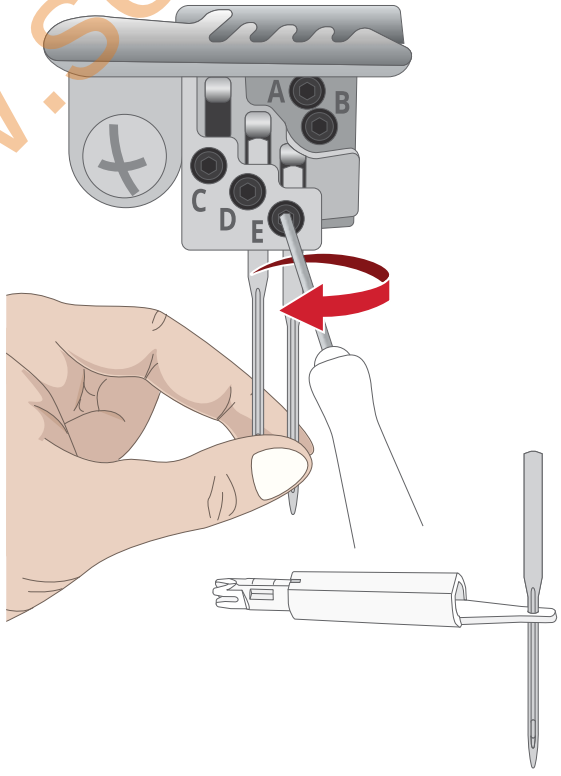

Turn the handwheel toward you until the needles are at the highest position.

Loosen, but do not remove the needle clamp screw with the allen key while you are holding the needles.

Remove the selected needle.

Hold the new needle with the flat surface to the back.

Insert the needle into the needle clamp as far as it will go.

Note: We recommend using the hole in the needle threader to hold the needle.

Securely tighten the needle clamp screw using the allen key.

Note: Do not over-tighten the screw as this may cause the needle clamp to be damaged.

Note: When using only one needle, slightly tighten the other needle clamp screws. This is to prevent losing the needle clamp screw.

www.sewshop.eu

Upper Cutter Position

Turn off the main power switch and unplug the machine.

Deactivate the Upper Cutter, Position B
Deactivate the upper cutter for flatlock, coverstitch and chainstitch or other sewing where the fabric shall not be cut.

Open the front cover.

Turn the handwheel toward you until the upper cutter (A) is raised to the highest position.

Pull the upper cutter knob (B) to the right as far as it will go.

Turn the knob towards you, until the cutter clicks into the locked position B (C).

Activate the Upper Cutter, Position A
Open the front cover.

Pull the movable cutter knob to the right as far as it will go.

Turn the knob away from you, until the cutter clicks into the cutting position A (D).

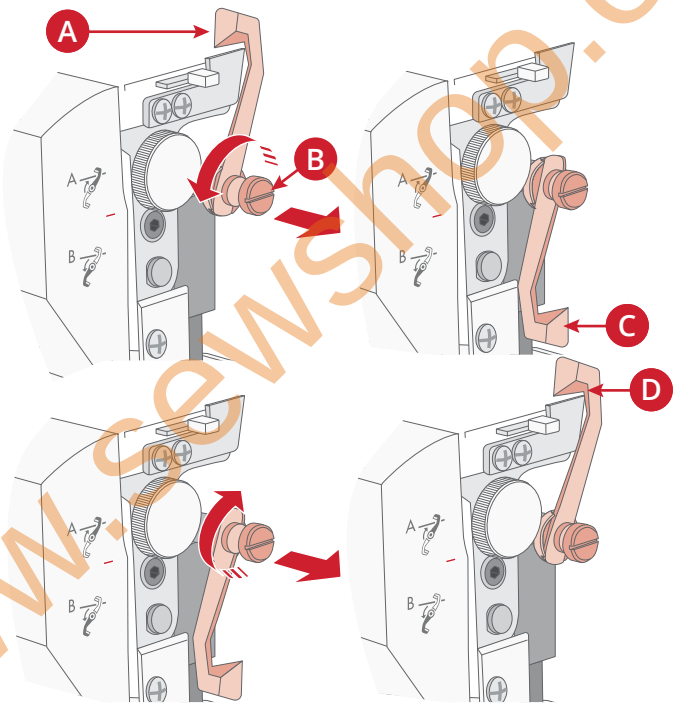

2–Thread Overlock Converter

2-thread overlock stitches are sewn using one needle thread and the lower looper thread. Before sewing, the 2-thread coverter must be engaged.

The 3-thread stretch overlock stitch and the 4–thread safety stitch are also sewn with the 2-thread overlock converter engaged.

Turn off the main power switch and unplug the machine

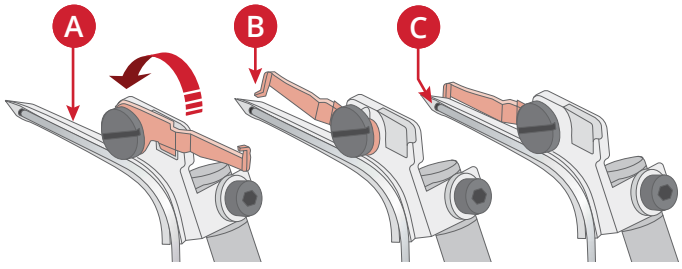

Engage the 2–Thread Overlock Converter
Open the front cover.

Flip the 2–thread converter (A) to the left over the upper looper. Push the tip of the converter backwards carefully, and insert the sharp edge (B) of the converter in the eye (C) at the rear of the upper looper.

Disengage the 2–Thread Overlock Converter
Carefully push the 2–thread converter backwards and remove the sharp edge from the eye of the upper looper. Flip the converter to the right until it is in the disengaged position.

www.sewshop.eu

Upper Looper Position

Deactivate the upper looper for coverstitch and chainstitch sewing.

Deactivate the Upper Looper, Position B
Open the front cover.

Turn the handwheel until the upper looper is in its lowest position.

Slide the Upper Looper Positioning lever to the left to deactivate the upper looper, Position B (1).

Activate the Upper Looper, Position A
Open the front cover.

Slide the lever to the right to activate the upper looper, Position A (2).

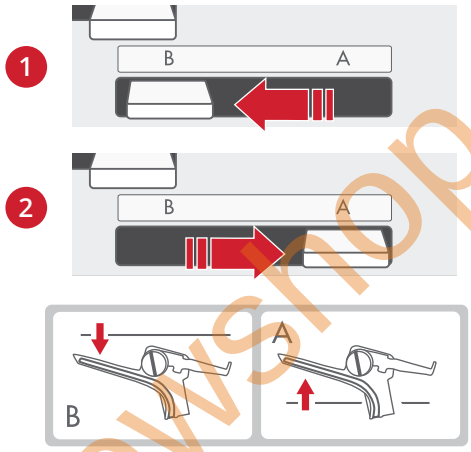

Threading/Sewing Lever

Threading Position
Before threading the loopers, the machine should be set in threading position. Then the loopers and looper pipes are set in the correct position for threading.

Raise the presser foot to release the tension discs.

Set the Threading/Sewing lever in "Threading" position by sliding it to the left.

Turn the handwheel slowly toward you until it clicks and the needles/loopers are locked in threading position.

Thread the needles (page 19) and loopers (page 26) as described in respective section.

Sewing Position
When the threading is complete, the machine should be set in sewing position.

Set the Threading/Sewing lever in "Sewing" position by sliding it to the right.

Pull 4˝ (10 cm) of the thread under the toe of the foot, and back between the presser foot and the upper cutter.

Close the front cover and lower the presser foot.

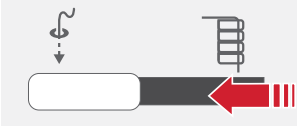

Threading Position

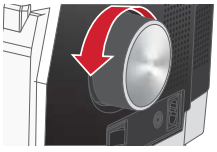

Turn the handwheel toward you

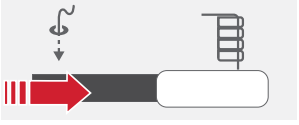

Sewing Position

Stitch Finger Lever

The stitch finger (A) is used to stabilize the fabric edge when forming stitches. The stitch finger lever should be set to "N" for all standard overlock sewing (B). To sew rolled edge you need to retract the stitch finger by setting the stitch finger lever to "R" (C).

When moving the stitch finger lever, be sure to push the lever as far as it will go in each direction.

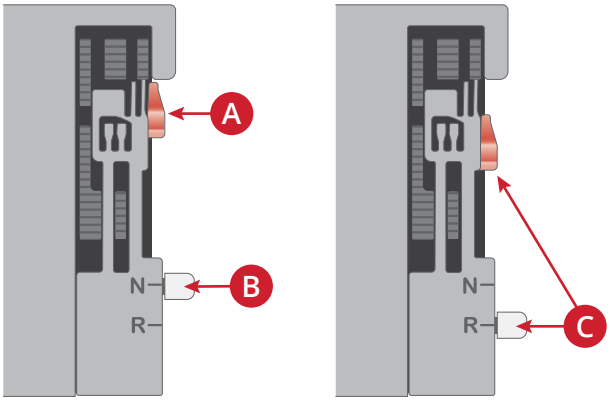

www.sewshop.eu

Stitch Selection Dial

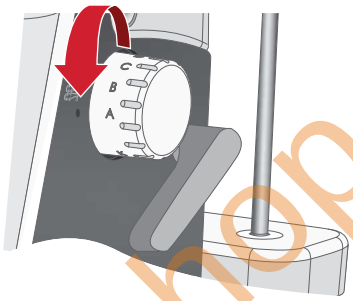

Your machine can sew a wide range of stitch types. The various stitches are obtained using the Stitch Selection Dial, in combination with needle positions, threading methods, and use of the 2-thread converter. The Stitch Overview (page 30), shows which machine settings should be used for the stitch you want to sew. Turn the Stitch Selection Dial to the letter that corresponds to the letter shown next to your desired stitch in the Stitch Overview.

The optimum thread tension is set automatically when a stitch is selected using the Stitch Selection Dial. However, depending on the fabric thickness and also the type of thread you are using, it may be necessary to adjust thread tension (page 16 and page 47).

Thread Tension Fine Tuning Levers

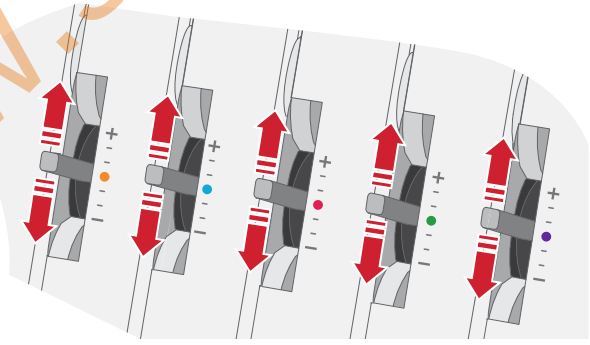

Thread tension is automatically set when selecting a stitch with the Stitch Selection Dial. However, it may be necessary to fine-tune the stitch depending on:

- Type and thickness of the fabric
- Needle size
- Size, type and fiber content of the thread

The tension can be adjusted individually for each thread. For best results, make tension adjustments in small increments. Move the tension lever towards "+" to increase the tension, and towards "-" to decrease the tension. Always test sew on a sample of your fabric before sewing on your project. Find more information on how to adjust thread tension onpage 47.

www.sewshop.eu

3 Threading

General Threading Information

Inside the front cover, there is a chart showing how to thread the loopers (A) and also a stitch overview (B).

The threading paths are color coded, to make the threading easier. Always start threading from left to right. See the Stitch Overview, , for a detailed description of what threading paths and settings to use for each stitch.

Your machine is equipped with an "Air Threading System" for fast, easy threading of the upper, lower, and chain loopers.

All three loopers can be threaded at the same time, with one push on the “threading button”. The loopers are threaded automatically.

Even if the loopers can be threaded at the same time, the threading descriptions on the following pages will show the threading of the loopers separately.

Note: Always raise the presser foot before threading.

See the table below for recommendations on what needles and thread to use for different fabric weights.

What Needle and Thread to Use

Fabric	*Light Fabric* (voile, crepe, georgette, etc.)	*Medium Fabric* (cotton, linen, chino, wool, satin, etc.)	*Heavy Fabric* (denim, tweed, etc.)	*Knits* (knitted fabrics)
Needles	PFAFF® EL x 705 size #12/80	PFAFF® EL x 705 size #14/90	PFAFF® EL x 705 size #14/90	PFAFF® EL x 705 size #12/80 – #14/90
Thread	Polyester (spun filament) Twisted thread: #60/2 - #100/3 #80/3 - #100/3	Twisted thread: #60/2	Twisted thread: #50/2 - #60/2	Twisted thread: #50/2 - #60/2

www.sewshop.eu

Placing the Thread Spools on the Spool Pins

Place the thread spools over the cone holders on the spool pin. Firmly insert the spool holder into the spool.

Note: If the spools are very large, place the cone holders up-side-down on the spool pin.

A. If sewing with small thread spools, remove the cone holders. Place the spool with its slit side up, and put the spool cap on top of it.

B. If the thread slips down from the spool during threading and/or sewing, put a net over the spool to avoid thread jams.

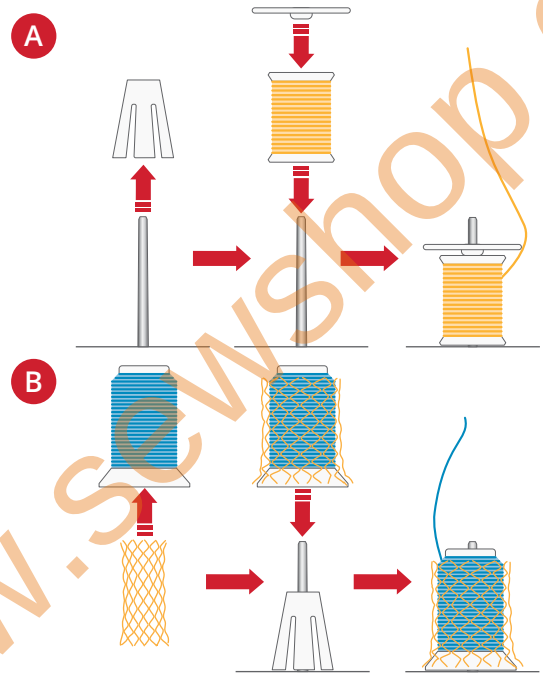

Changing Thread

To change the threads, re-thread the needles as described in section Threading the Needles, page 19, and the loopers using the air threading system as described in section Threading the Loopers, page 26.

The following is another easy way to change threads:

Cut the thread near the spool, behind the guides on the telescopic thread stand.

Remove the thread spool and place the new thread on the spool pin.

Tie the end of the new thread to the end of the old thread. Cut the thread tails to approx. 1" (2-3cm) in length and firmly pull both threads to test knot security.

Raise the presser foot, to release the thread tension.

Pull the threads through the machine one at a time until the knots are in front of the needle. If the threads cannot be pulled easily, check for tangles on thread guides or looping under thread stand.

Tip: By turning the handwheel a least a turn away from you, and pulling the threads straight backwards, you might find it easier to pull through the threads.

Cut the thread behind the knot and thread the needle.

Note: Do not use this method for heavy weight threads, instead thread according to recommendations on page 29.

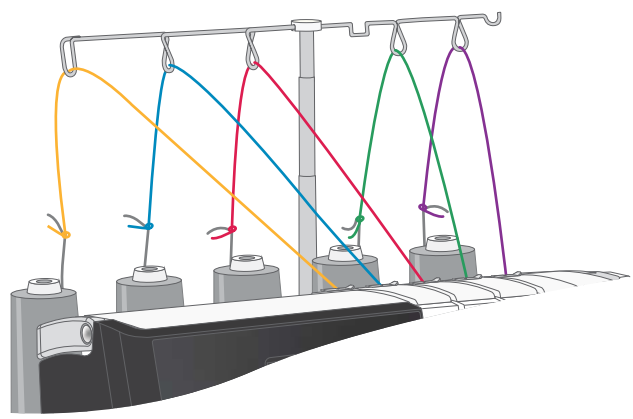

www.sewshop.eu

Threading the Needles

Threading the Left Overlock Needle (A)

Yellow threading path

Blue threading path for Safety Stitches no 1 and 4

Needle A

Note: Raise the presser foot to release the tension discs.

Note: Make sure to raise the telescopic thread stand to its highest position (illustration shows a "cropped" thread stand).

1. Place a thread spool on the left spool pin. Pull the thread through the left thread guide from back to front.
2. Carefully slide the thread under the pre-tension thread guide from right to left.
3. Pull the thread along the threading slit. Using both hands, insert the thread between the tension discs.
4. Pull the thread down along the slit and pass it to the left through the thread path.
5. Slip the thread into the middle slot on the thread guide.
6. Continue threading into the slot on the take-up lever.
7. Then slip the thread into the second slot on the next thread guide.
8. Place the thread in the third slot on the thread guide above the needle clamp.
9. Place the thread behind the guide above the A/B needles.

   Thread the eye of the needle. Use the needle threader (see page 25) to make needle eye threading easier. Pull about 4" (10 cm) of thread through needle eye to hang free.

   Place the thread to the back, under the presser foot.

Close the front cover and lower the presser foot to start sewing.

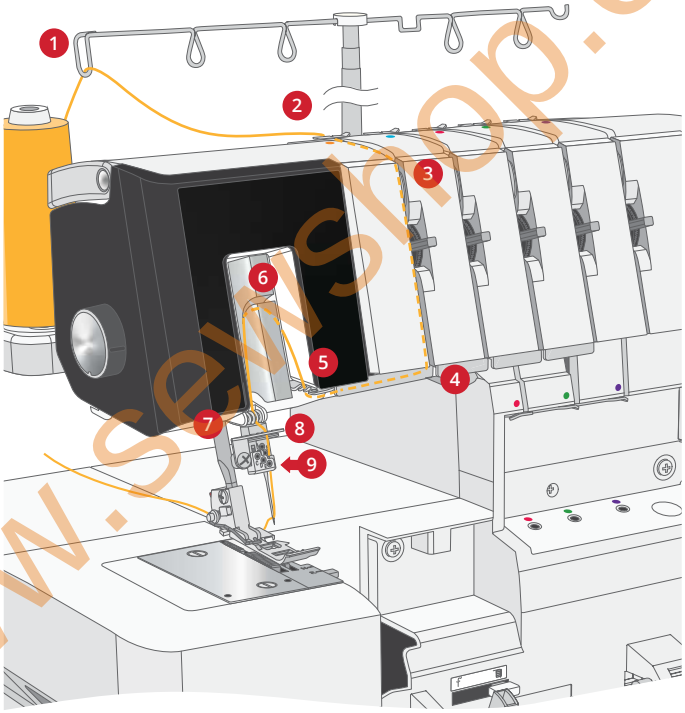

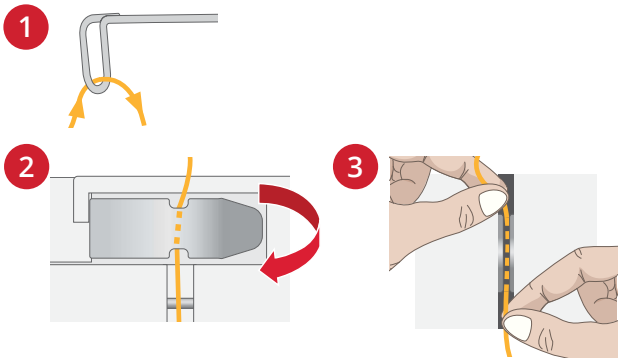

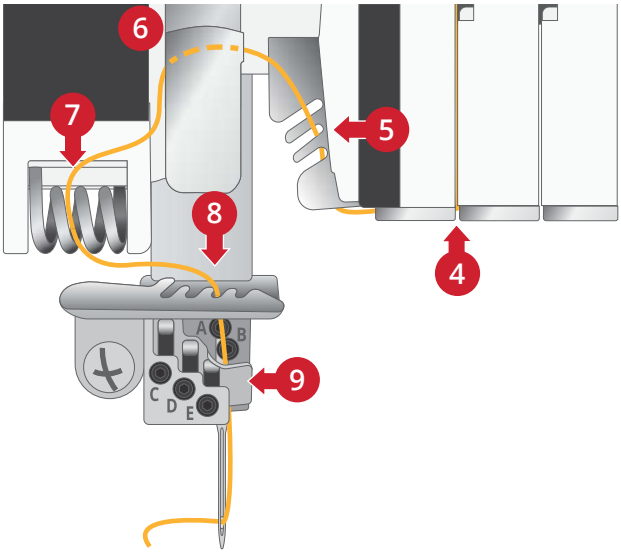

www.sewshop.eu

Threading the Right Overlock Needle (B)

Blue threading path

Needle B

Note: Raise the presser foot to release the tension discs.

Note: Make sure to raise the telescopic thread stand to its highest position (illustration shows a "cropped" thread stand).

1. Place a thread spool on the second left spool pin. Pull the thread through the second left thread guide from back to front.
2. Carefully slide the thread under the pre-tension thread guide from right to left.
3. Pull the thread along the threading slit. Using both hands, insert the thread between the tension discs.
4. Pull the thread down along the slit and pass it to the left following the thread path.
5. Slip the thread into the front slot on the thread guide.
6. Continue threading into the slot on the take-up lever.
7. Then slip the thread into the third slot on the next thread guide.
8. Place the thread in the fourth slot on the thread guide above the needle clamp.
9. Place the thread behind the guide above the A/B needles.

   Thread the eye of the needle. Use the needle threader (see page 25) to make needle eye threading easier. Pull about 4" (10 cm) of thread through needle eye to hang free.

   Place the thread to the back, under the presser foot.

Close the front cover and lower the presser foot to start sewing.

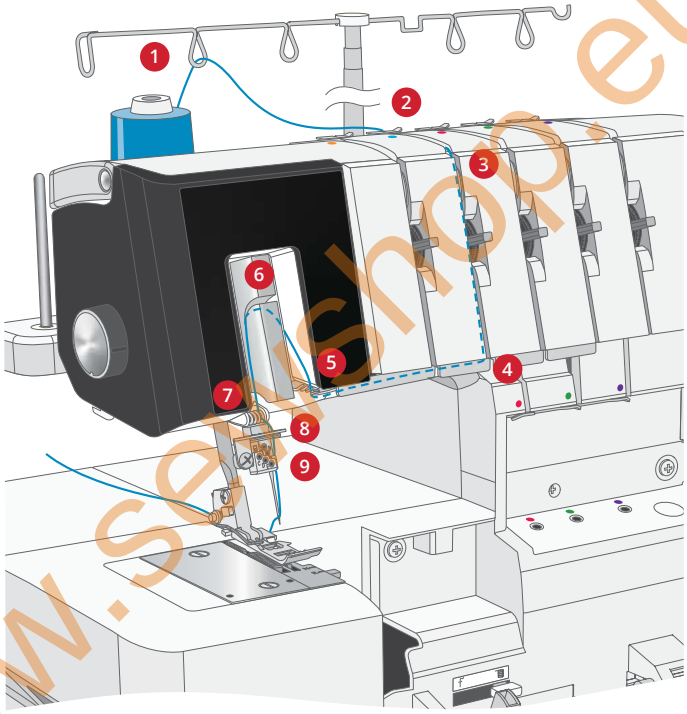

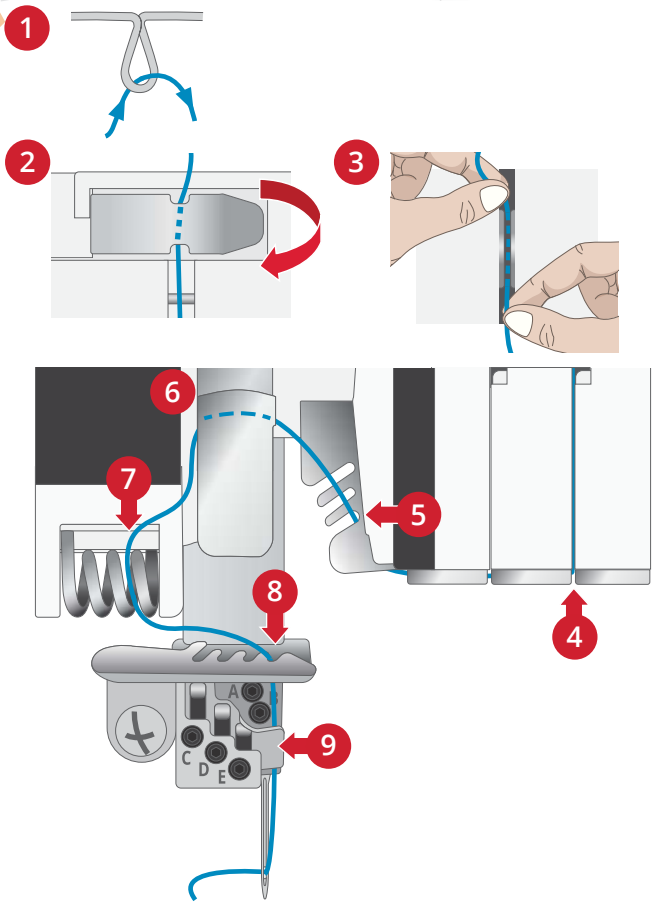

www.sewshop.eu

Threading the Chainstitch Needle (D)

Blue threading path

Yellow threading path for Safety Stitches no 1, 2, 4 and 5

Needle D

Note: Raise the presser foot to release the tension discs.

Note: Make sure to raise the telescopic thread stand to its highest position (illustration shows a "cropped" thread stand).

1. Place a thread spool on the second left spool pin. Pull the thread through the second left thread guide from back to front.
2. Carefully slide the thread under the pre-tension thread guide from right to left.
3. Pull the thread along the threading slit. Using both hands, insert the thread between the tension discs.
4. Pull the thread down along the slit and pass it to the left following the thread path.
5. Slip the thread into the middle slot on the thread guide.
6. Continue threading into the slot on the take-up lever.
7. Then slip the thread into the second slot on the next thread guide.
8. Place the thread in the second slot on the thread guide above the needle clamp.

   Thread the eye of the needle. Use the needle threader (see page 25) to make needle eye threading easier. Pull about 4" (10 cm) of thread through needle eye to hang free.

   Place the thread to the back, under the presser foot.

Close the front cover and lower the presser foot to start sewing.

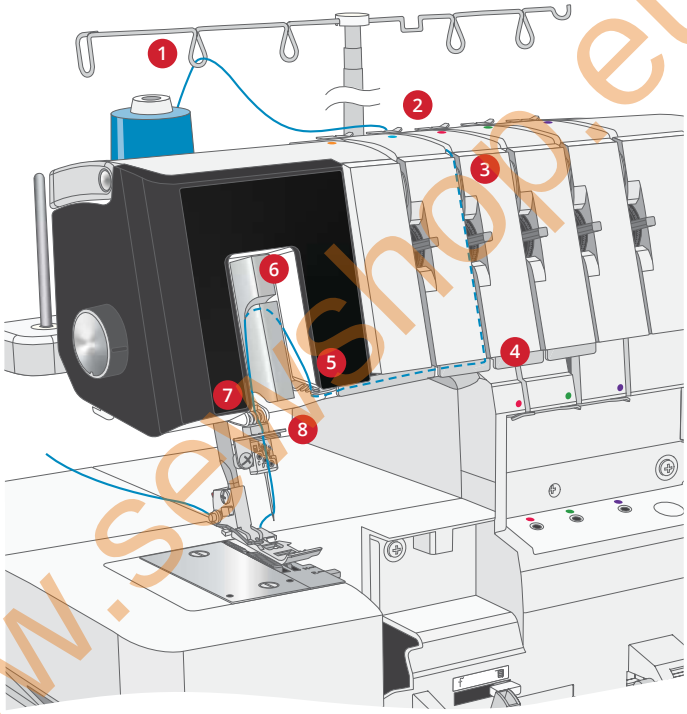

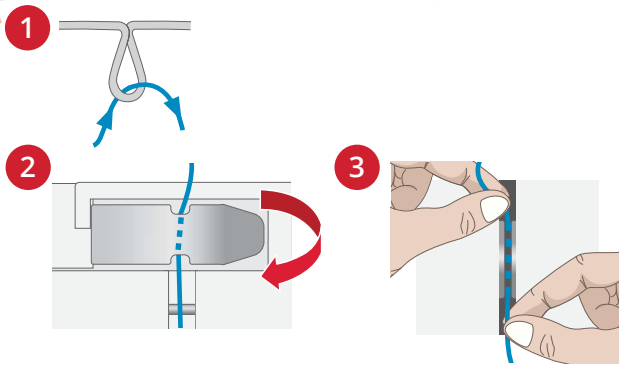

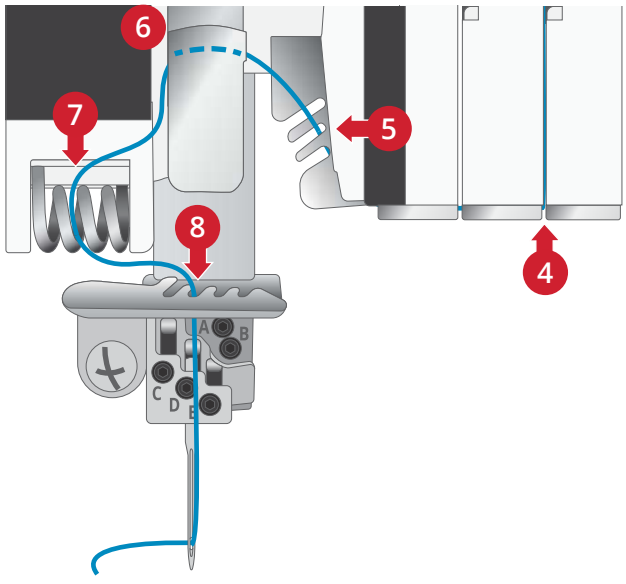

www.sewshop.eu

Threading the Coverstitch Needles

Note: Thread the needles in the following order: left (C), middle (D), right (E)

Threading the Left Coverstitch Needle (C)

Yellow threading path

Needle C

Note: Raise the presser foot to release the tension discs.

Note: Make sure to raise the telescopic thread stand to its highest position (illustration shows a "cropped" thread stand).

1. Place a thread spool on the left spool pin. Pull the thread through the left thread guide from back to front.
2. Carefully slide the thread under the pre-tension thread guide from right to left.
3. Pull the thread along the threading slit. Using both hands, insert the thread between the tension discs.
4. Pull the thread down along the slit and pass it to the left following the thread path.
5. Slip the thread into the rear slot on the thread guide.
6. Continue threading into the slot on the take-up lever.
7. Then slip the thread into the first slot on the next thread guide.
8. Place the thread in the first slot on the thread guide above the needle clamp.

   Thread the eye of the needle. Use the needle threader (see page 25) to make needle eye threading easier. Pull about 4" (10 cm) of thread through needle eye to hang free.

   Place the thread to the back, under the presser foot.

Close the front cover and lower the presser foot to start sewing.

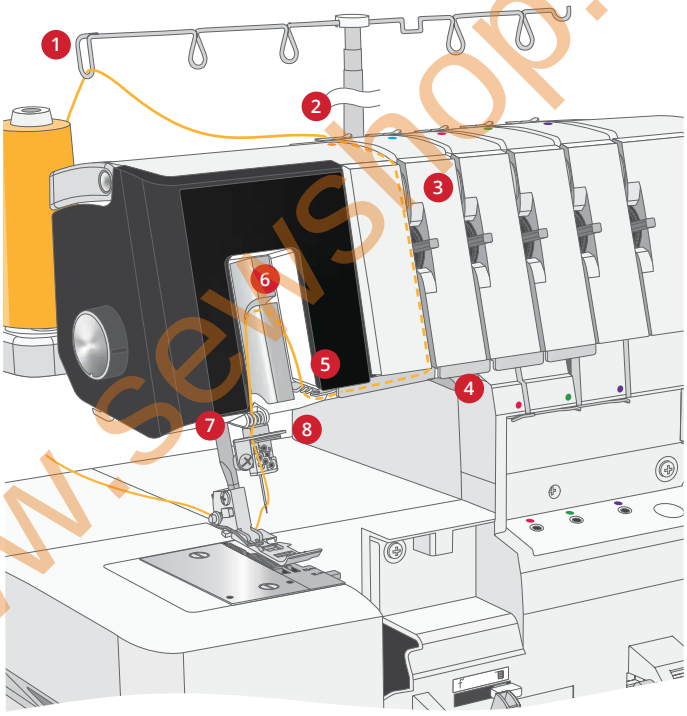

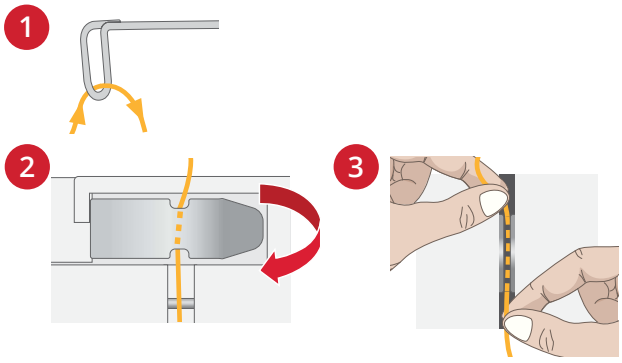

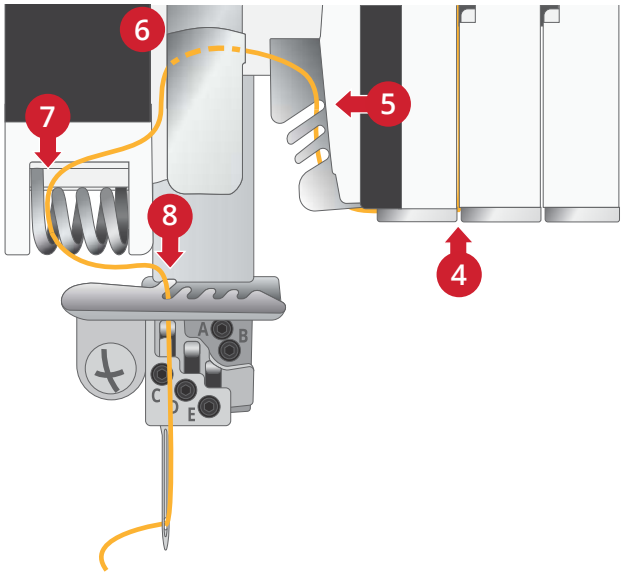

www.sewshop.eu

Threading the Middle Coverstitch Needle (D)

Blue threading path

Needle D

Note: Raise the presser foot to release the tension discs.

Note: Make sure to raise the telescopic thread stand to its highest position (illustration shows a "cropped" thread stand).

1. Place a thread spool on the second left spool pin. Pull the thread through the second left thread guide from back to front.
2. Carefully slide the thread under the pre-tension thread guide from right to left.
3. Pull the thread along the threading slit. Using both hands, insert the thread between the tension discs.
4. Pull the thread down along the slit and pass it to the left following the thread path.
5. Slip the thread into the middle slot on the thread guide.
6. Continue threading into the slot on the take-up lever.
7. Then slip the thread into the second slot on the next thread guide.
8. Place the thread in the second slot on the thread guide above the needle clamp.

   Thread the eye of the needle. Use the needle threader (see page 25) to make needle eye threading easier. Pull about 4" (10 cm) of thread through needle eye to hang free.

   Place the thread to the back, under the presser foot.

Close the front cover and lower the presser foot to start sewing.

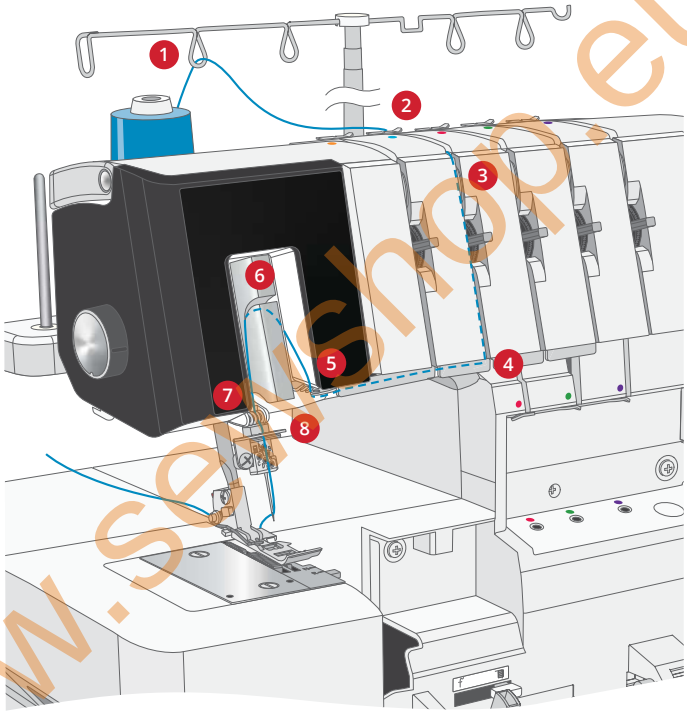

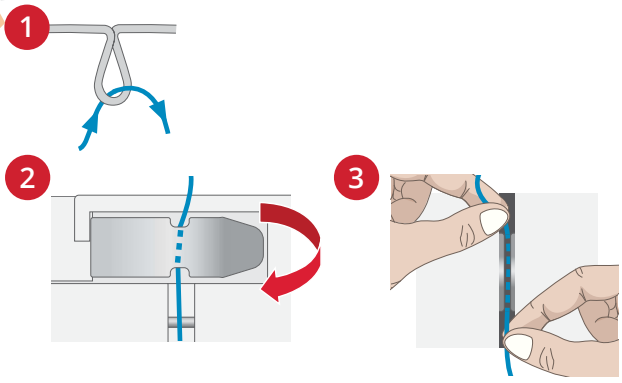

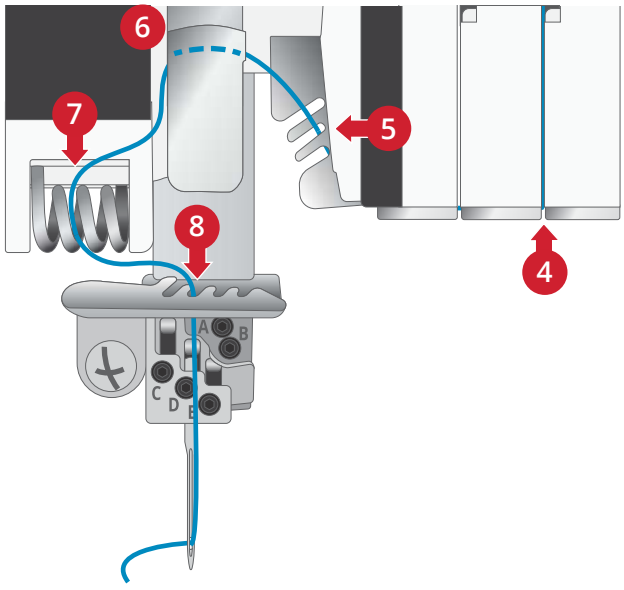

www.sewshop.eu

Threading the Right Coverstitch Needle (E)

Red threading path

Needle E

Note: Raise the presser foot to release the tension discs.

Note: Make sure to raise the telescopic thread stand to its highest position (illustration shows a "cropped" thread stand).

1. Place a thread spool on the middle spool pin. Pull the thread through the left thread guide from back to front.
2. Carefully slide the thread under the pre-tension thread guide from right to left.
3. Pull the thread along the threading slit. Using both hands, insert the thread between the tension discs.
4. Pull the thread down along the slit and pass it to the left following the thread path.
5. Slip the thread into the front slot on the thread guide.
6. Continue threading into the slot on the take-up lever.
7. Then slip the thread into the third slot on the next thread guide.
8. Place the thread in the third slot on the thread guide above the needle clamp.

   Thread the eye of the needle. Use the needle threader (see page 25) to make needle eye threading easier. Pull about 4" (10 cm) of thread through needle eye to hang free.

   Place the thread to the back, under the presser foot.

Close the front cover and lower the presser foot to start sewing.

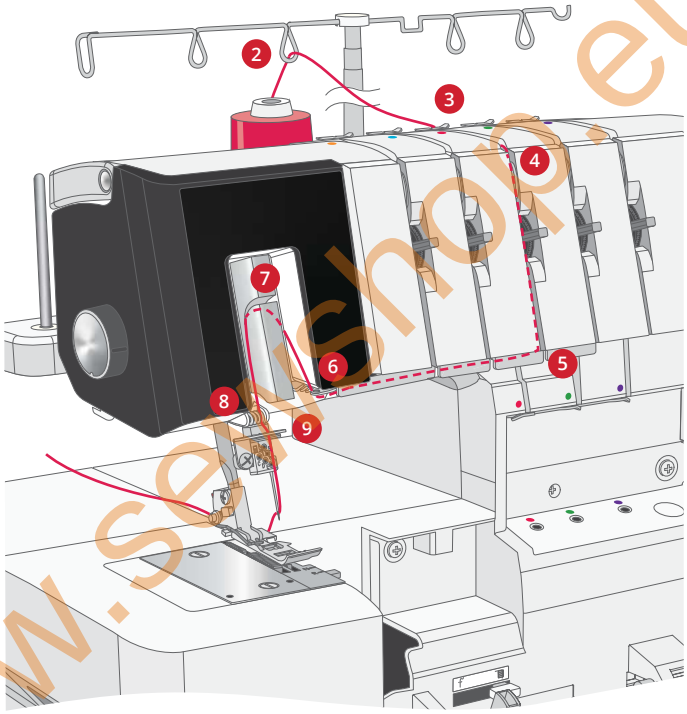

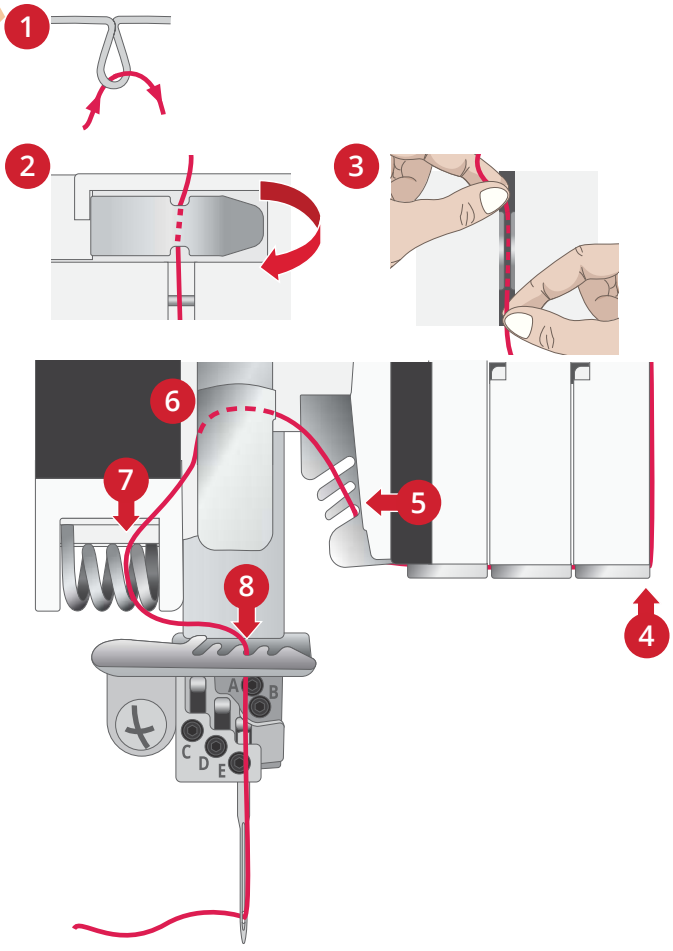

www.sewshop.eu

Needle Threader

To make threading the needles easier, use the needle threader included with the accessories.

Turn the handwheel so the needles are in their highest position and lower the presser foot. Make sure one of the rectangular markings of the needle threader is pointing upwards (A). Place the thread from right to left in the notch on the tip of the needle threader (B).

Hold the needle threader against the needle. Move the needle threader down to the needle eye and press gently against the needle, causing a small metal pin to push the thread through the needle eye and form a thread loop (C).

Use the needle threader to pull the thread loop out behind the needle (D).

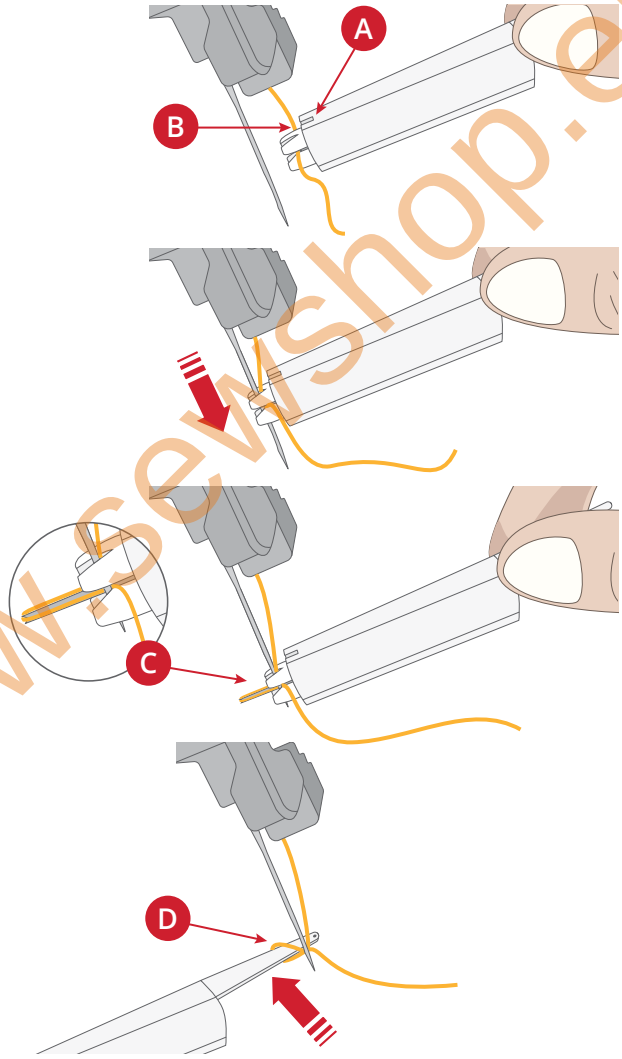

www.sewshop.eu

Threading the Loopers

Threading the Upper Looper

Red threading path

Note: Raise the presser foot to release the tension discs.

Note: Make sure to raise the telescopic thread stand to its highest position (illustration shows a "cropped" thread stand).

Note: Make sure the upper looper is in up-position, by sliding the upper looper positioning lever to the right (page 15).

Note: If threading special threads, such as wooly nylon, etc., refer to page 29.

1. Set the Threading/Sewing lever in "Threading" position by sliding it to the left.

   Turn the handwheel slowly toward you until it clicks and the loopers are locked in threading position.
2. Place a thread spool on the middle spool pin. Pull the thread through the middle thread guide from back to front.
3. Carefully slide the thread under the top cover thread guide from right to left, as illustrated.
4. Pull the thread along the threading slit. Using both hands, insert the thread between the tension discs.
5. Pull the thread down along the slit and into the upper looper thread guide.
6. Pull out approximately 22″ (56 cm) of thread. Make sure that the thread does not get tangled around the cover.

   Using the tweezers, insert the end of the thread 1″ (2 cm) or more into the upper looper threading hole.

   Note: Trim the thread end so that it can be inserted into the threading hole smoothly.
7. Push the Threading Button to thread the looper.
8. Make sure that the thread comes out from the hole of the looper tip.

   If the thread does not come out from the hole, follow the procedure from step "6" again.

   Pull 4″ (10 cm) of the thread under the toe of the foot, and back between the presser foot and the upper cutter.
9. Set the Threading/Sewing lever in "Sewing" position by sliding it to the right.

Close the front cover and lower the presser foot.

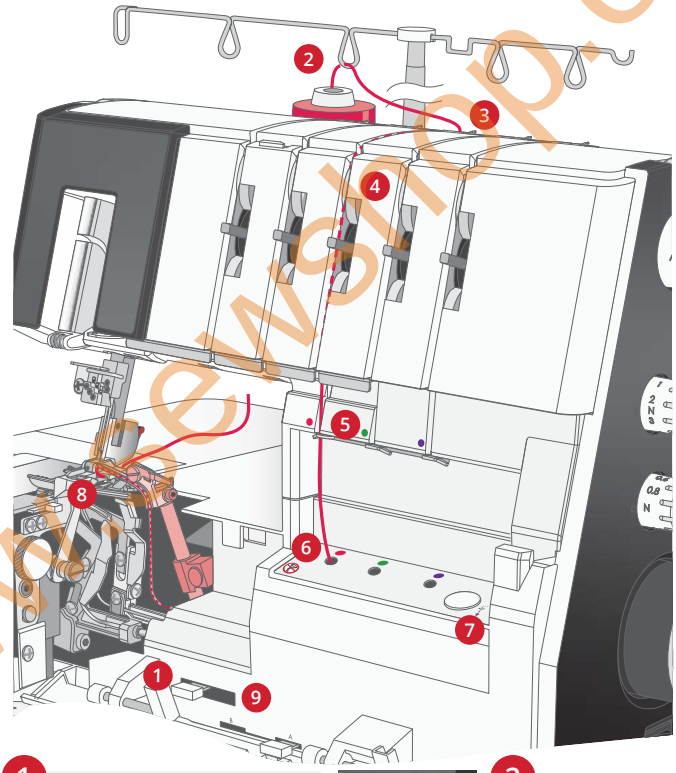

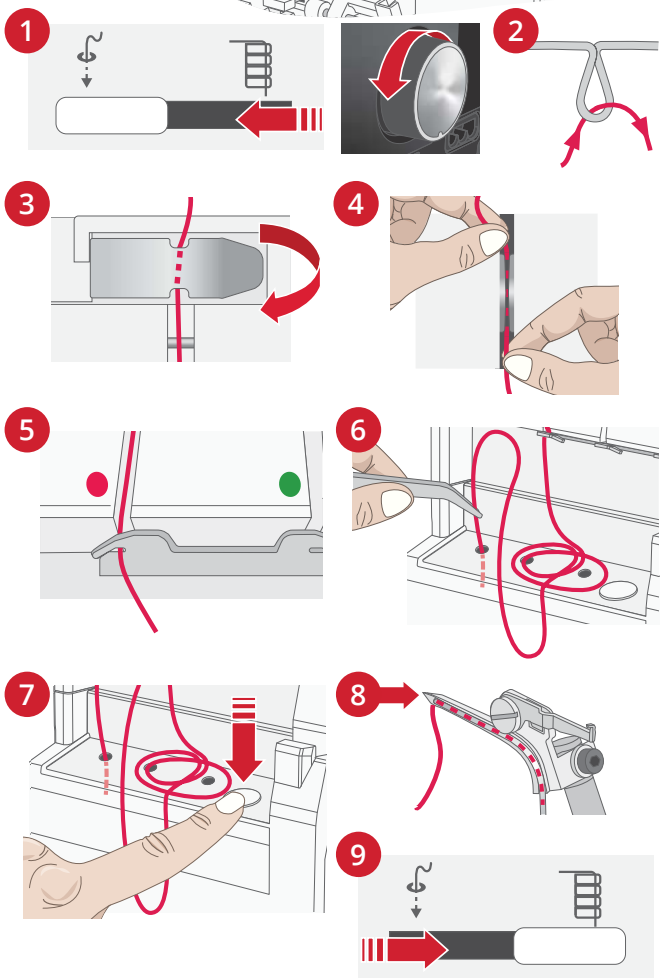

www.sewshop.eu

Threading the Lower Looper

Green threading path

Note: Make sure to raise the telescopic thread stand to its highest position (illustration shows a "cropped" thread stand).

Note: Raise the presser foot to release the tension discs.

Note: If threading special threads, such as wooly nylon, etc., refer to *page 29*.

1. Set the Threading/Sewing lever in "Threading" position by sliding it to the left.

   Turn the handwheel slowly toward you until it clicks and the loopers are locked in threading position.
2. Place a thread spool on the second right spool pin. Pull the thread through the second right thread guide from back to front.
3. Carefully slide the thread under the top cover thread guide from right to left, as illustrated.
4. Pull the thread along the threading slit. Using both hands, insert the thread between the tension discs.
5. Pull the thread down along the slit and into the lower looper thread guide.
6. Pull out approximately 22˝ (56 cm) of thread. Make sure that the thread does not get tangled around the cover.

   Using the tweezers, insert the end of the thread 1˝ (2 cm) or more into the upper looper threading hole.

   Note: Trim the thread end so that it can be inserted into the threading hole smoothly.
7. Push the Threading Button to thread the looper.
8. Make sure that the thread comes out from the hole of the looper tip.

   If the thread does not come out from the hole, follow the procedure from step "6" again.

   Pull 4˝ (10 cm) of the thread under the toe of the foot, and back between the presser foot and the upper cutter.
9. Set the Threading/Sewing lever in "Sewing" position by sliding it to the right.

Close the front cover and lower the presser foot.

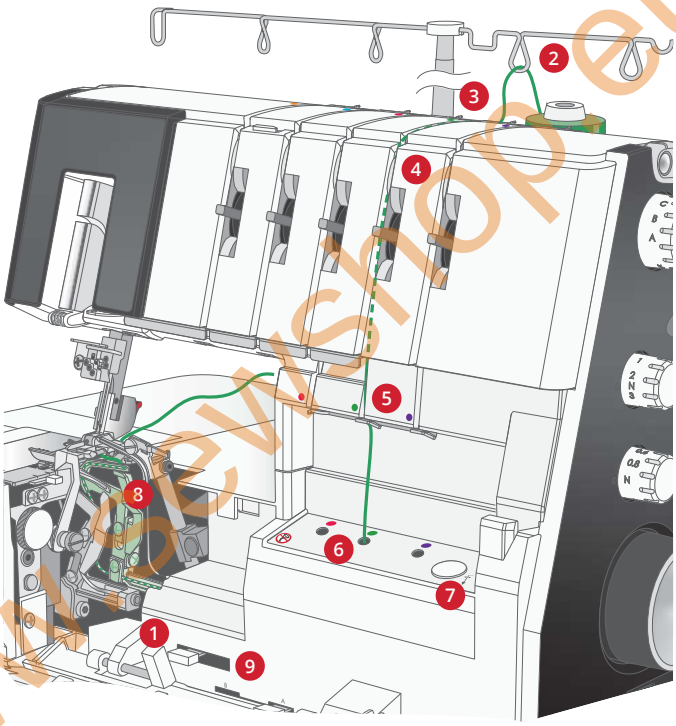

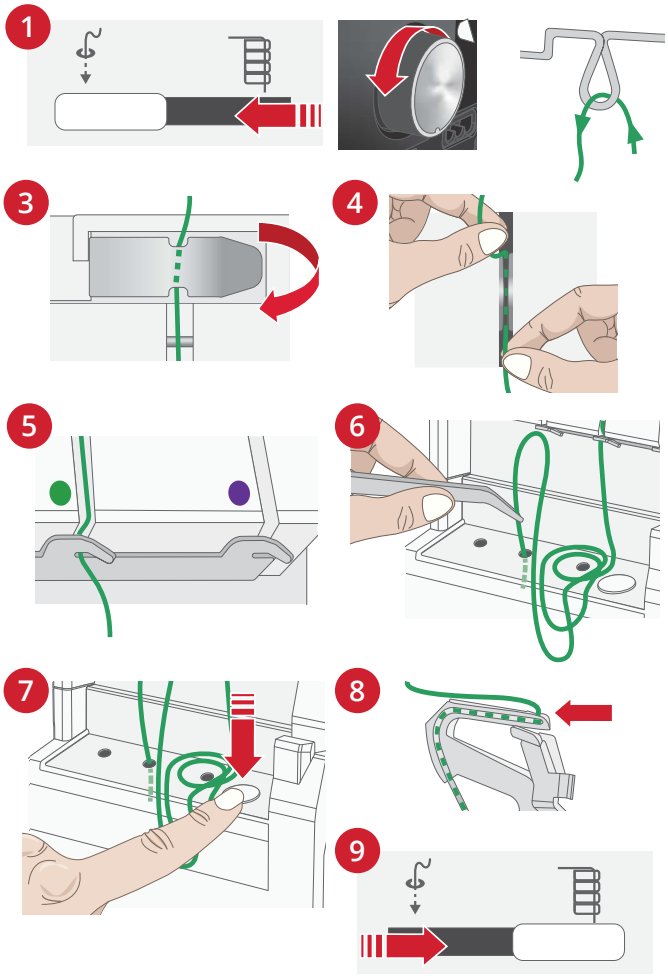

www.sewshop.eu

Threading the Chainstitch Looper

Purple threading path

Note: Make sure to raise the telescopic thread stand to its highest position (illustration shows a "cropped" thread stand).

Note: Raise the presser foot to release the tension discs.

Note: If threading special threads, such as wooly nylon, etc., refer to *page 29*.

1. Set the Threading/Sewing lever in "Threading" position by sliding it to the left.

   Turn the handwheel slowly toward you until it clicks and the loopers are locked in threading position.
2. Place a thread spool on the right spool pin. Pull the thread through the right thread guide from back to front.
3. Carefully slide the thread under the top cover thread guide from right to left, as illustrated.
4. Pull the thread along the threading slit. Using both hands, insert the thread between the tension discs.
5. Pull the thread down along the slit and into the chainstitch looper thread guide.
6. Pull out approximately 22˝ (56 cm) of thread. Make sure that the thread does not get tangled around the cover.

   Using the tweezers, insert the end of the thread 1˝ (2 cm) or more into the upper looper threading hole.

   Note: Trim the thread end so that it can be inserted into the threading hole smoothly.
7. Push the Threading Button to thread the looper.
8. Make sure that the thread comes out from the hole of the looper tip.

   If the thread does not come out from the hole, follow the procedure from step "6" again.

   Pull 4˝ (10 cm) of the thread, and place it in the looper cover.
9. Set the Threading/Sewing lever in "Sewing" position by sliding it to the left.

Close the front cover and lower the presser foot.

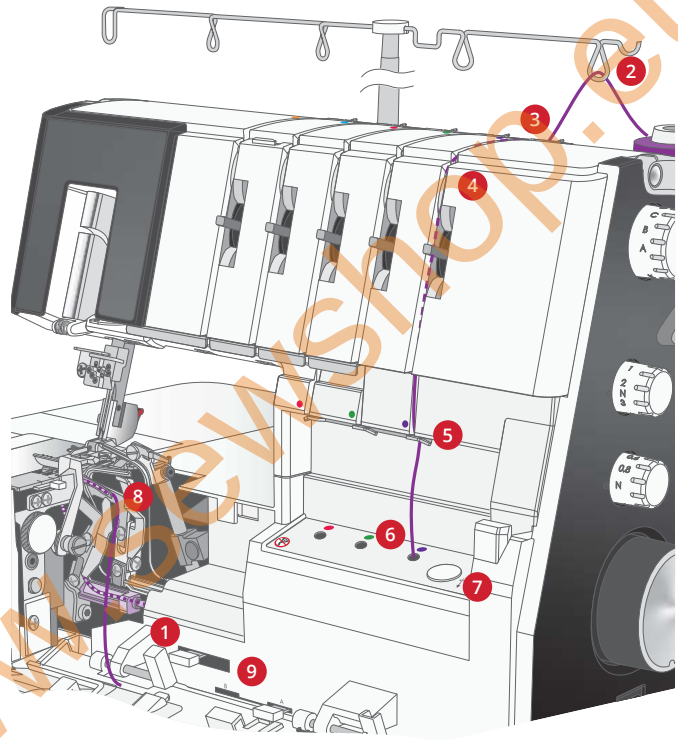

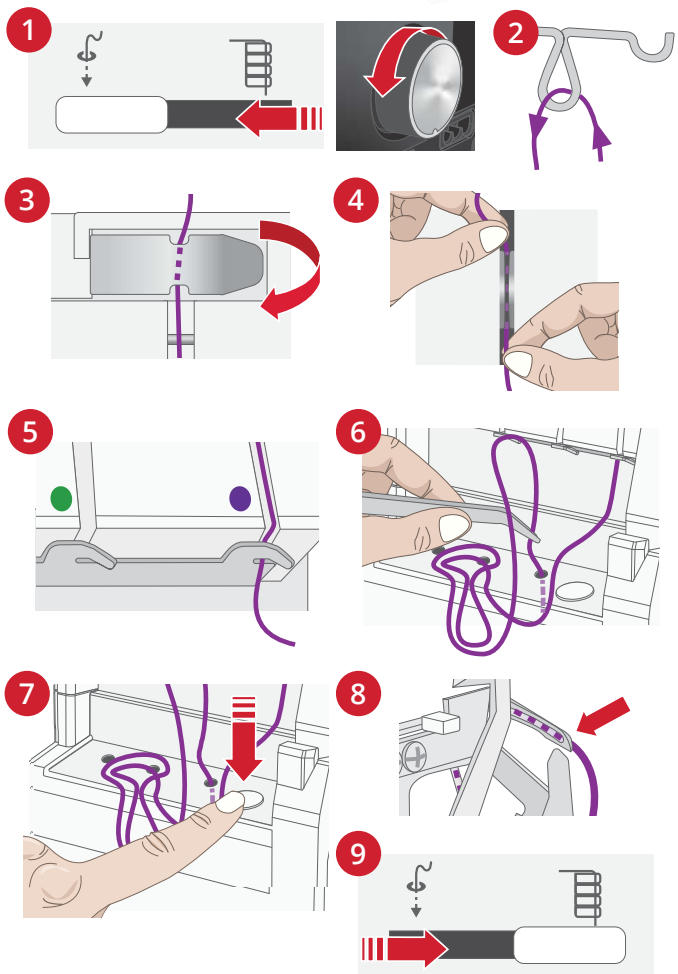

www.sewshop.eu

Threading Specialty Threads

When sewing with specialty threads (such as wooly nylon), it can be easier to thread the loopers using the looper threading wire or a standard overlock thread.

Before threading:

Note: Raise the presser foot to release the tension discs.

Set the Threading/Sewing lever in "Threading" position by sliding it to the left.

Turn the handwheel slowly toward you until it clicks and the loopers are locked in threading position.

Thread the looper threads up to the front of the looper threading hole.

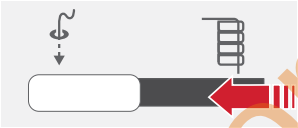

Threading Position

Once the loopers are threaded:

Set the Threading/Sewing switch to "Sewing" position.

Pull 4″ (10 cm) of the thread under the toe of the foot, and back between the presser foot and the upper cutter.

Close the front cover and lower the presser foot.

Sewing Position

Using the Looper Threading Wire

Note: Do not push the threading button when using the threading wire.

Take the looper threading wire and push the straight end (not the loop end) through the looper threader hole until it comes out from the hole of the looper tip (A).

Pass approximately 2″ (5 cm) of thread through the loop of the looper threading wire (B).

Carefully pull the end of the looper threading wire until the thread comes out from the hole of the looper tip (C).

Remove the thread from the looper threading wire.

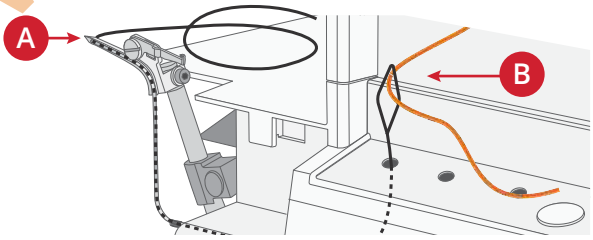

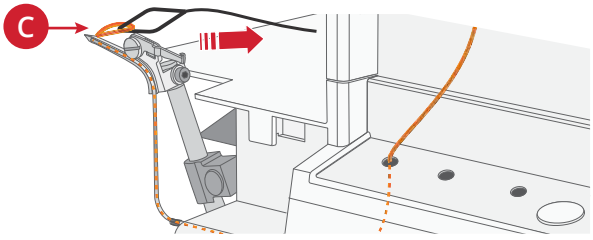

Using a Standard Thread

Prepare 12″ (30 cm) of a standard thread and tie it 2″ (5 cm) from the end of the looper thread as shown (A).

Note: When tying the standard thread to the looper thread, tie a knot as small as possible and cut any excess standard thread.

Using the tweezers, insert the end of the thread 1″ (2 cm) or more into the looper threading hole (B).

Push the Threading Button to thread the looper (C).

Make sure that the thread comes out from the hole of the looper tip. Carefully pull the standard thread until the knot is about to go into the looper threader hole.

Then fold the loose end of the specialty thread as illustrated (D). Continue pulling the standard thread until the specialty thread is pulled through the threading channel and is threaded through the hole in the looper tip (E).

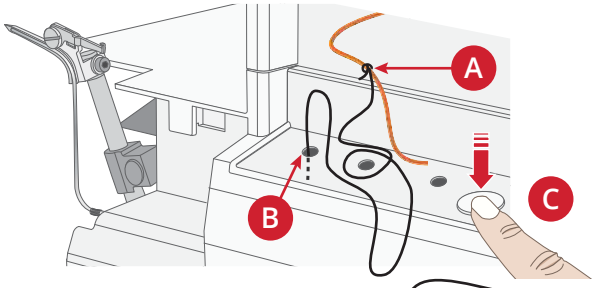

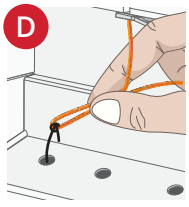

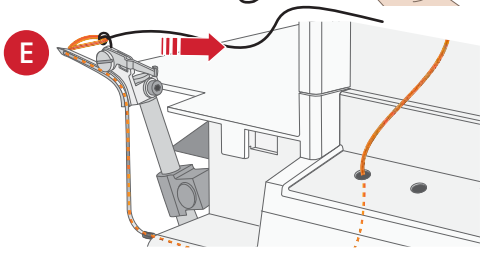

www.sewshop.eu

4 Stitches and Sewing Techniques

Stitch Overview

The settings shown in the stitch overview are our recommendations based on normal conditions. The correct tension is set automatically when using the Stitch Selection Dial. It may be necessary to adjust the settings according to the stitch, type of fabric and thread you are using. For best results make adjustments in small steps of no greater than half a number at a time. Always test sew on a sample of your fabric before sewing on your project.

Different stitches are obtained by combining the stitch selection dial with different needle positions, threading methods, and the use of the 2-thread converter.

The differential feed should be set to 1.0 for overlock stitching on normal fabric. To adjust the differential feed, turn the dial.

Icon Explanation

Stitch Selection Dial

Needle Position

N/R Stitch Finger Lever Setting

2–Thread Converter

Stitch Length

Cutting Width

A/B A or B Setting
Position for Upper Cutter/ Upper Looper and usage of Cutter Cover A or Coverstitch Table B

Threading Path
Color dots indicate what threading paths that shall be used

5-Thread Safety Stitch, Wide

For joining with a reinforced stitch and overcasting in one step. A durable chainstitch seam with overlock edge for garment sewing, quilt piecing and other projects.

Suitable for all fabrics.

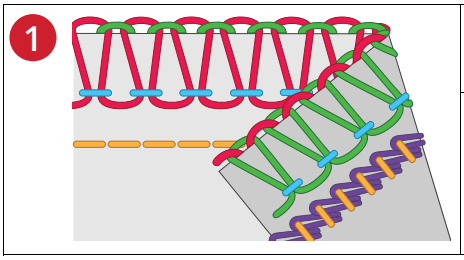

				N/R		A/B	
B	D, A	2.5	6.0	N	–	A	

5-Thread Safety Stitch, Narrow

For joining with a reinforced stitch and overcasting in one step. A durable chainstitch seam with overlock edge for garment sewing, quilt piecing and other projects.

Suitable for all fabrics.

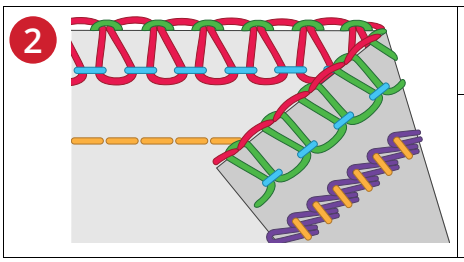

				N/R		A/B	
H	D, B	2.5	6.5	N	–	A	

www.sewshop.eu

4–Thread Overlock

For all seams where stretch or give is needed, such as neck edges, side seams, sleeves, etc. Specialty techniques can be done with a 4-thread overlock seam such as gathering, applying piping with the optional piping foot and elastic with the optional elastic foot.

Suitable for all fabrics.

3		A/B C D E			N/R		A/B	
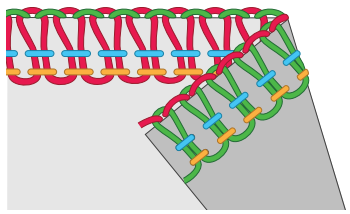	A	A, B	2.5	6.5	N	–	A	

4-Thread Safety Stitch, Wide

For joining with reinforced stitch and overcasting in one step.

Suitable for all fabrics.

4		A/B C D E			N/R		A/B	
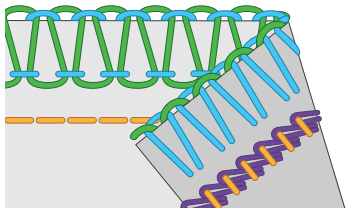	I	D, A	2.5	6.0	N	YES	A	

4-Thread Safety Stitch, Narrow

For joining with reinforced stitch and overcasting in one step.

Suitable for all fabrics.

5		A/B C D E			N/R		A/B	
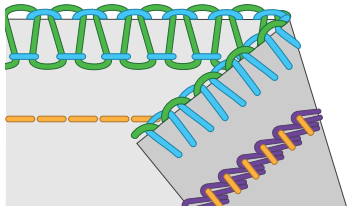	I	D, B	2.5	6.5	N	YES	A	

3-Thread Overlock, Wide

For sewing two layers of stretchy fabric or overcasting a single layer of light to medium fabric. Use heavier threads in the loopers to create decorative braids. (Hold your hand behind the presser foot and gently and slowly pull the thread chain as you sew, trying to keep the same tension as it has been sewn onto fabric.)

Suitable for all fabrics.

6		A/B C D E			N/R		A/B	
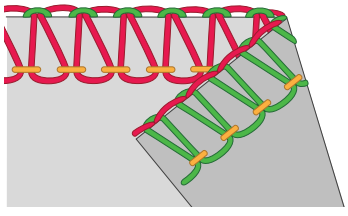	B	A	2.0	6.0	N	–	A	

www.sewshop.eu

3-Thread Overlock, Narrow

For sewing two layers of stretchy fabric or overcasting a single layer of light fabric. Popular for creating decorative tucks. Use decorative threads in the loopers and regular thread in the needle. Use different colors in the loopers to get an interesting effect.

Suitable for all fabrics.

7 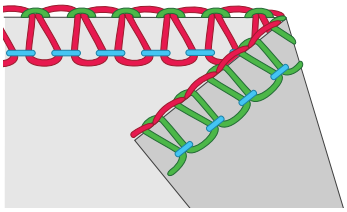		A B C D E			N/R		A/B	
	H	B	2.5	6.5	N	–	A	

3-Thread Narrow Edge

For edging lightweight fabrics. It gives a nice finish on silky scarves, pillow ruffles and napkins. Thread the upper looper with a decorative thread, such as 40 weight rayon for a beautiful satin edge. Read more on page 39.

Suitable for light and medium weight woven fabrics and light and medium knits.

Note: Not recommended for heavyweight woven fabrics or heavyweight stretch fabrics.

8 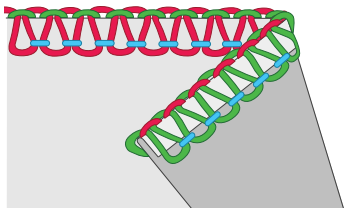		A B C D E			N/R		A/B	
	H	B	1.5	6.5	R	–	A	

3-Thread Flatlock, Wide

For sewing stretchy fabrics together with a decorative effect either with the flatlock side or the ladder stitch side. Create varying effects by threading the upper looper with decorative thread. Read more on page 40.

Suitable for all fabrics.

9 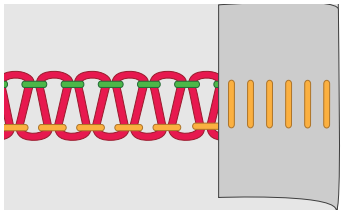		A B C D E			N/R		A/B	
	F	A	2.0	6.5	N	–	A	

3-Thread Flatlock, Narrow

For sewing stretchy fabrics together with a decorative effect either with the flatlock side or the ladder stitch side. Create varying effects by threading the upper looper with decorative thread. Read more on page 40.

Suitable for light and medium weight fabrics.

Note: Not recommended for heavyweight stretch fabrics.

10 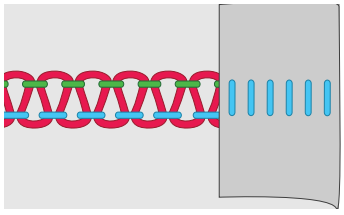		A B C D E			N/R		A/B	
	F	B	2.0	6.5	N	–	A	

www.sewshop.eu

3-Thread Stretch Overlock

For sewing extra stretchy fabrics. Add additional stretch by using a stretchy type thread in the lower looper. Change the thread tension accordingly.

Note: Not recommended for woven fabrics.

11		A B C D E			N/R		A/B	
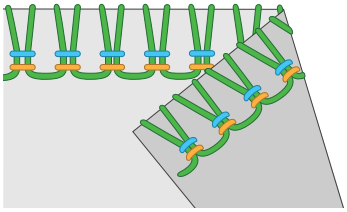	G	A, B	2.5	6.0	N	YES	A	

3-Thread Rolled Edge

For edging lightweight fabrics. It gives a nice finish on silky scarves, pillow ruffles and napkins. For a beautiful rolled edge, thread the upper looper with decorative thread and the needle and lower looper with lightweight regular thread. Read more on page 39.

Suitable for light and medium weight woven fabrics and light and medium stretch fabrics.

Note: Not recommended for heavyweight woven fabrics or heavyweight stretch fabrics.

12		A B C D E			N/R		A/B	
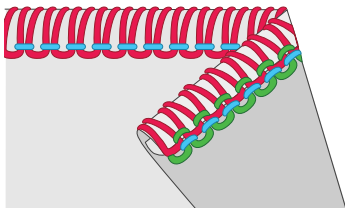	C	B	1.3	6.0	R	–	A	

2-Thread Overlock, Wide

For overcasting a single layer of light to medium weight fabrics.

Note: Not recommended for heavyweight fabrics.

13		A B C D E			N/R		A/B	
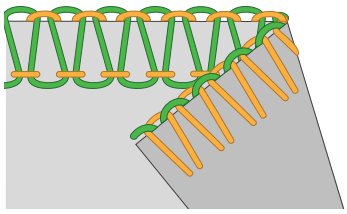	E	A	2.0	6.5	N	YES	A	

2-Thread Overlock, Narrow

For overcasting a single layer of light to medium weight fabrics.

Note: Not recommended for heavyweight fabrics.

14		A B C D E			N/R		A/B	
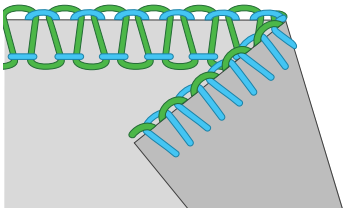	E	B	2.0	6.5	N	YES	A	

www.sewshop.eu

2-Thread Narrow Edge

Use for edging lightweight fabrics. Read more on page 39.

Only for very soft lightweight fabrics.

Note: Not recommended for heavyweight woven fabrics or medium to heavyweight stretch fabrics.

15					N/R		A/B	
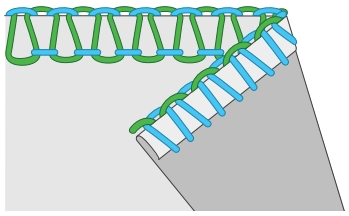	K	B	1.5	6.5	R	YES	A	

2-Thread Flatlock, Wide

For sewing stretchy fabrics together with a decorative effect either with the flatlock side or the ladder stitch side. Create varying effects by threading the lower looper with decorative thread. Read more onpage 40.

Suitable for all fabrics.

16					N/R		A/B	
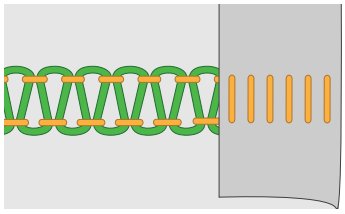	E	A	2.0	6.5	N	YES	A	

2-Thread Wrapped Overlock, Wide

For sewing two layers of stretchy fabrics together. Add additional stretch by using a stretchy type thread in the lower looper. Change the thread tension accordingly.

Suitable for medium and heavy stretch fabrics.

Note: Not recommended for light, medium, heavy woven fabrics or light stretch fabrics.

17					N/R		A/B	
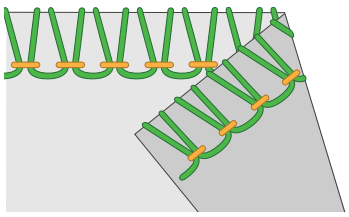	G	A	2.5	6.0	N	YES	A	

2-Thread Wrapped Overlock, Narrow

For sewing two layers of stretchy fabrics together. Add additional stretch by using a stretchy type thread in the lower looper. Change the thread tension accordingly.

Suitable for medium and heavy stretch fabrics.

Note: Not recommended for light, medium, heavy woven fabrics or light stretch fabrics.

18					N/R		A/B	
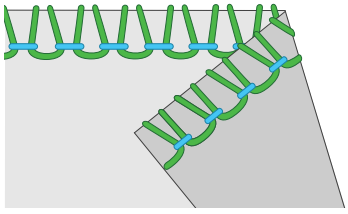	D	B	2.0	6.5	N	YES	A	

www.sewshop.eu

2-Thread Rolled Edge

For edging lightweight fabrics. It gives a nice finish on silky scarves, pillow ruffles and napkins. Thread the lower looper with a decorative thread, such as 40 weight rayon for a beautiful satin edge. Read more on page 39.

Suitable for very soft and flexible lightweight woven fabrics and lightweight knits.

Note: Not recommended for heavyweight woven fabrics or heavyweight stretch fabrics.

19		A B C D E			N/R		A/B	
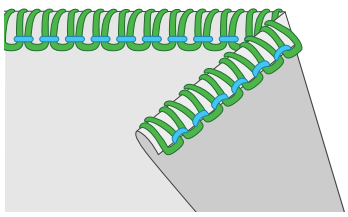	B	B	1.5	6.0	R	YES	A	

Coverstitch, Triple

For hems on stretch fabrics and for decorative effects on all kind of fabrics. Use decorative thread in looper for embellishment. Read more on page 41.

Suitable for all fabrics.

20		A B C D E			N/R		A/B	
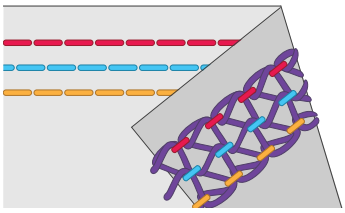	J	C, D, E	3.0	–	R	–	B	

Coverstitch, Wide

For hems on stretch fabrics and for decorative effects on all kind of fabrics. Use decorative thread in looper for embellishment. Read more on page 41.

Suitable for all fabrics.

21		A B C D E			N/R		A/B	
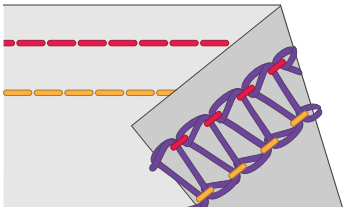	J	C, E	3.0	–	R	–	B	

Coverstitch, Narrow

For hems on stretch fabrics and for decorative effects on all kind of fabrics. Use decorative thread in looper for embellishment. Read more on page 41.

Suitable for all fabrics.

22		A B C D E			N/R		A/B	
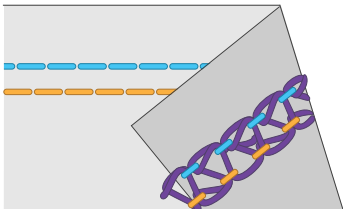	J	C, D	2.5	–	R	–	B	

www.sewshop.eu

Chainstitch

For construction and hemming. Baste with ease,as it is an easily removable stitch. Use decorative thread in looper for embellishment. Read more on page 42.

Suitable for all fabrics.

23					N/R		A/B	
	D	D	2.5	–	R	–	B	

www.sewshop.eu

Start Sewing

Tip: Some fabrics have a lot of excess dye which can cause discoloration on other fabric but also on your machine. This discoloring may be very difficult or impossible to remove. Fleece and denim fabric, especially red and blue, often contain a lot of excess dye. If you suspect that your fabric/ready-to-wear garment contains a lot of excess dye, always pre-wash it before sewing to avoid the discoloring of your machine.

When the machine is completely threaded, close the front cover and bring all of the threads over the stitch plate and slightly to the left under the presser foot.

Ensure that the upper cutter moves against the stationary cutter correctly by turning the hand wheel slowly toward you. If the upper cutter blade does not move correctly, check if there are any fabric or waste thread stuck between the blades.

Hold the threads and apply a slight tension.

Turn the hand wheel toward you 2 or 3 complete turns to start making a thread chain. Check if all threads wind around the stitch finger of the stitch plate. If the threads do not wind around the finger, make sure each thread is threaded correctly.

A. Continue holding the thread chain while pressing the foot control. Sew until the chain is 2″-3″ (5-8cm) long.

   Place fabric under the front of the presser foot and sew a test sample. Guide the fabric slightly with your left hand while sewing. Do not pull on the fabric as this may deflect the needle, causing it to break.

B. When you reach the end of the fabric, continue sewing while drawing the finished fabric gently backwards and to the left. This is called chaining off. It prevents the threads from coming undone and prepares for next sewing.

C. Cut the threads with the thread cutter, leaving a thread chain approximately 2″-3″ (5-8cm) long at the end of the fabric. Pull the threads around the thread cutter from the back, then toward you.

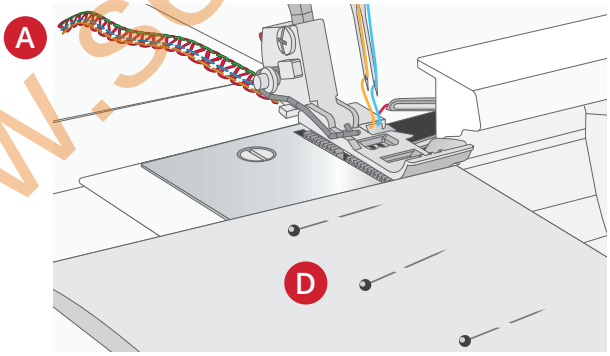

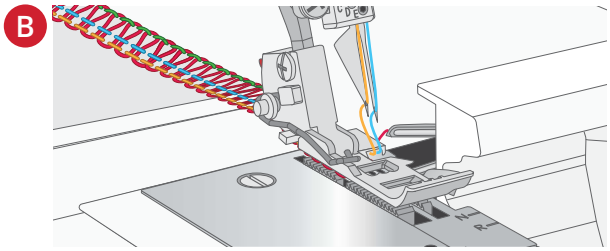

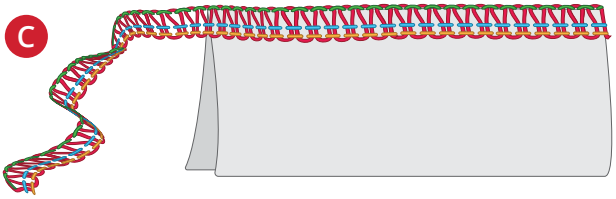

Pin Placement

Insert straight pins to the left of the presser foot (D). The pins will be easy to remove and are away from the cutters.

Note: Sewing over pins will damage and might destroy the edge of the cutters.

Securing the Thread Chain

Tie a Knot

To avoid the thread chain from ravelling, separate and tie the thread ends together.

Use a Sewing Needle

Thread the chain into a large eyed, hand sewing needle.

Insert the needle into the end of the seam and pull the chain into the seam to secure the threads.

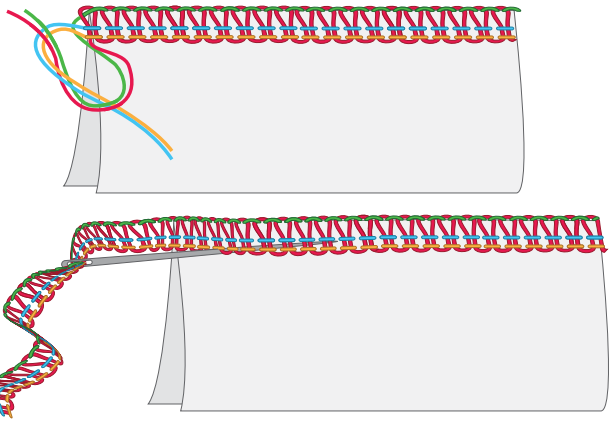

www.sewshop.eu

Use the Machine at the Start of a Seam

1. Before placing the fabric in the machine, sew a thread chain approximately 2"-3" (5-8cm) long.

   Place your fabric in front of the presser foot. Sew a few stitches and stop.

2. Raise the presser foot and bring the thread chain to the left around and under the presser foot.

   Place the thread chain between the presser foot and upper knife, holding it in position as you lower the presser foot to sew.

3. After sewing approximately 1˝ (2.5 cm), move the chain to the right and under the upper knife, cutting the chain as you sew.

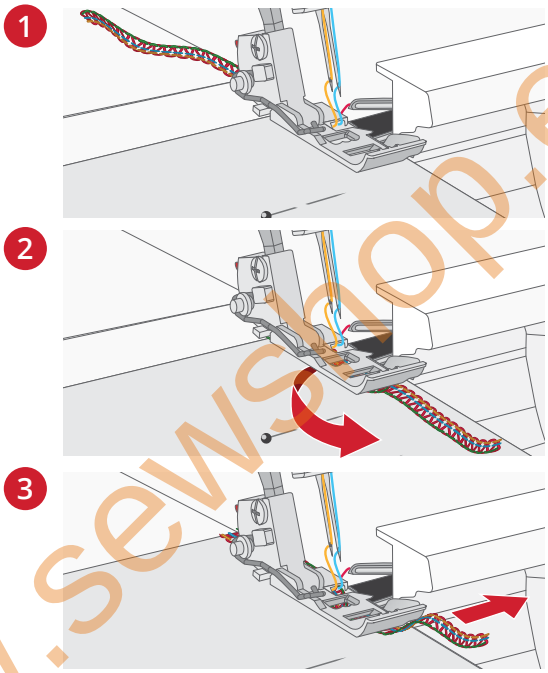

Use the Machine at the End of a Seam

1. Serge one stitch off the end of the seam.

   Raise the needle and presser foot, and gently pull the threads off the stitch finger.

2. Turn the fabric over so that the under side is up.
3. Serge approximately 1˝(2.5cm) over the stitching and angle off the fabric.

Note: Not for Coverstitch, see page 41.

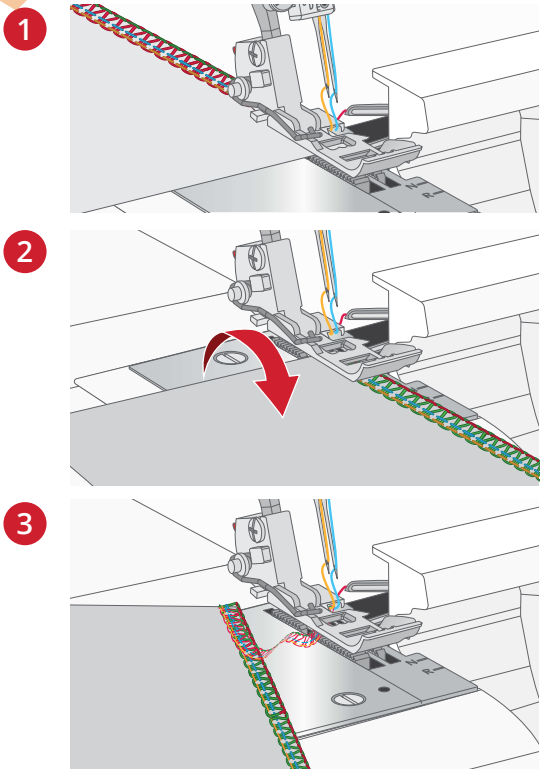

Cutting the Seams Open

Cut the upper looper thread with a seam ripper (not included with the machine) to cut the seams.

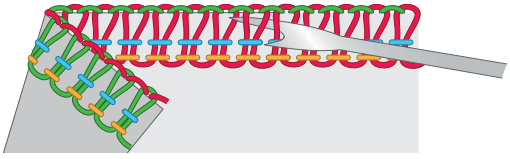

www.sewshop.eu

Rolled Edge Sewing

The rolled edge stitch is appropriate for light weight fabrics such as lawn, voile, organdy, crepe, etc. The rolled edge is achieved by adjusting the thread tension to make the fabric edge roll under the fabric while overlocking. Adjust the thread tension to change the degree of rolling. To sew rolled edge you need to set the stitch finger lever to "R".

Tip: For a beautiful rolled edge, thread the upper looper with a decorative thread and the needle and lower looper with lightweight regular thread.

2–Thread Rolled Edge

Select the 2–thread rolled edge stitch.

Engage the 2-thread overlock converter (see page 14).

Use the right needle thread and lower looper thread.

Move the stitch finger lever to "R" (see page 15).

Set the stitch length to 1.5 for a fine seam.

Make a thread chain and test sew on a sample of your fabric before sewing on your project. Hold the thread chain while beginning to sew to keep it from curling into the seam.

Tip: Use 40 weight thread in the looper for a nice seam.

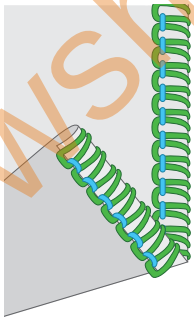

2–Thread Rolled Edge

3–Thread Rolled Edge/Narrow Edge

A variant of the rolled edge stitch is the narrow edge. Due to different thread tension, the seams get a different appearance and density.

Select the 3-thread rolled edge stitch or the 3–thread narrow edge stitch.

Use the right needle thread and the upper and lower looper threads.

Move the stitch finger lever to "R" (see page 15).

Set the stitch length to "1.3–1.5" for a fine seam.

Make a thread chain and test sew on a sample of your fabric before sewing on your project. Hold the thread chain while beginning to sew to keep it from curling into the seam.

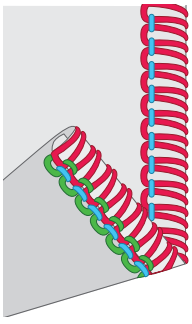

3–Thread Rolled Edge

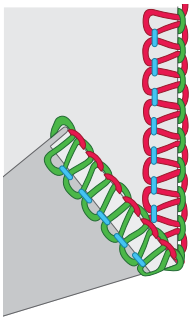

3–Thread Narrow Edge

www.sewshop.eu

Flatlock Sewing

A flatlock is made by adjusting the tension of the 3-thread overlock stitch, sewing the seam and pulling the fabrics apart to flatten the seam. The tensions must be adjusted correctly for the fabric to pull flat properly.

A flatlock can be used both as a decorative construction stitch, sewing two pieces together (Standard Flatlock), or for decoration only on one piece of fabric (Decorative Flatlock).

There are two ways to sew a Flatlock. Either with the wrong sides of the fabric together to create a decorative look, or with the right sides together, to create a Ladder Stitch.

Standard Flatlock, Wide

Thread the lower and upper looper and the left needle.

Place the wrong sides of the two pieces of fabric together to sew a decorative stitch on the right side of the project.

Sew the seam, trimming the excess fabric. The needle thread will form a V on the underside of the fabric. The lower looper thread will pull into a straight line at the fabric edge.

Unfold the fabric and pull on opposite sides of the seam to pull the stitches flat.

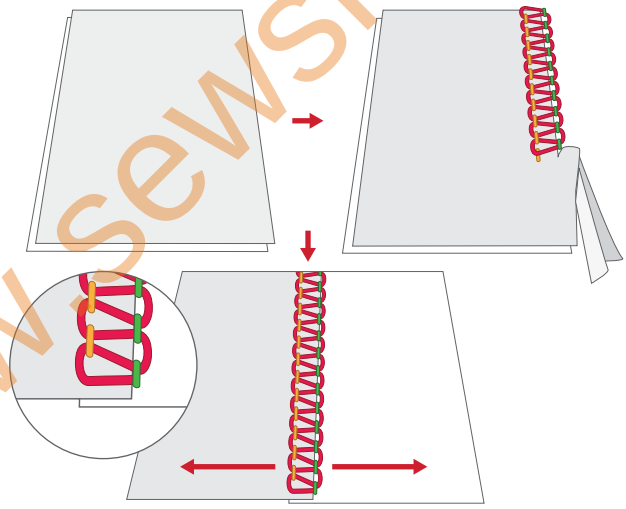

Decorative Flatlock, Wide

Deactivate the upper cutter (see page 14). The fabric should not be trimmed on this stitch.

Thread the lower looper, upper looper and the left needle.

Fold the fabric piece, wrong sides together, to sew a decorative stitch on the right side of the project.

Position the fabric so the seam is sewn with part of the stitch extending off the fabric.

Unfold the fabric and pull on opposite sides of the stitch to flatten.

Tip: The upper looper thread is the prominent thread in the flatlock stitch. Place a decorative thread in the upper looper and regular threads in the lower looper and needle.

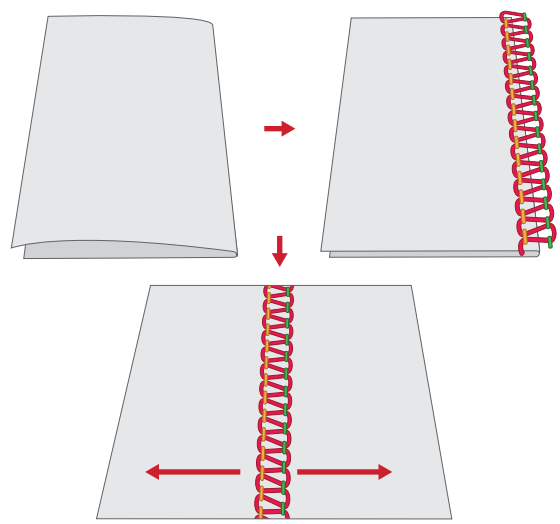

Ladder Stitch

A ladder stitch is sewn as a decorative flatlock, but is sewn with the right sides of the fabric together. The needle thread will be the prominent thread that creates the ladder.

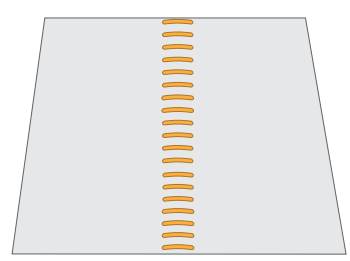

www.sewshop.eu

Coverstitch Sewing

The coverstitch can be used for covering, binding or top-stitching necklines and for hemming the bottom of T-shirts and sweatsuits, etc., in addition to flat joining seams (plain seaming). The coverstitch is most suitable for stretchy fabrics. It can also be used for woven fabrics.

Note: The free arm is convenient for sewing trousers legs and other small areas such as children's garments (see page 10).

Machine Set Up

Deactivate the upper cutter (see page 14). The fabric should not be trimmed on this stitch.

Set the stitch finger lever to R (see page 15).

If inserted, remove needle A and needle B.

Install needles C, D and/or E depending on desired coverstitch.

Deactivate the upper looper (see page 15).

Remove Cutter Cover A and install Coverstitch Table B (see page 11). The markings on Coverstitch Table B indicate the distance, in cm and inches, from the coverstitch middle needle. Use it as a guide when positioning the fabric edge.

Set the machine in Threading Position (page 15) and thread the machine.

Set the machine in Sewing Position (page 15) and close the front cover.

Start Sewing

Raise the presser foot.

Place fabric under the presser foot behind the needle.

Lower the presser foot.

Press the foot control to start sewing.

Note: When you start to sew from the middle of the fabric, place the fabric at the desired starting point of sewing.

Securing the Coverstitch Seam End

Chaining off is not possible after sewing coverstitch because it causes the seam to unravel when the looper thread is pulled out at the end of sewing. Therefore, secure the seam end in the following manner.

When Sewing Through to the Edge of Fabric

1. Separate the thread ends.
2. Knot the needle threads (2 or 3 threads) together first.
3. Tie these threads with the looper threads.

Cut extra threads.

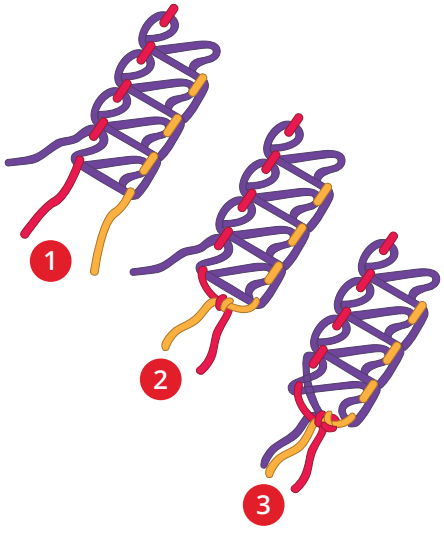

When Sewing is Stopped Halfway

Raise the presser foot and turn the handwheel one full rotation away from you. Pull the fabric under and behind the presser foot while securing the thread ends with your thumb and your forefinger to prevent the seam from unraveling.

Pull out the needle threads (2 or 3 threads) on the underside of the fabric and knot the threads in the same manner as described above.

Cut extra threads.

Note: Normally, the seams at the start of sewing do not unravel, but it is wise to secure the seam end following the same steps as described when sewing through to the edge of the fabric.

www.sewshop.eu

Chainstitch Sewing

The chainstitch is sewn with two threads, one needle and one looper. Normally, the machine trims the fabric edge while the seam is being sewn. However, a chainstitch seam can be placed at a desired distance from edge of fabric by putting the upper cutter in B position, disengaging the upper looper and installing coverstitch table B (see page 11).

⚠ *Turn off the main power switch and unplug the machine.*

Machine Set Up

Deactivate the upper cutter (see page 14). The fabric should not be trimmed on this stitch.

If inserted, remove needle A, B, C and E.

Install needle D.

Deactivate the upper looper (see page 15).

Remove Cutter Cover A and install Coverstitch Table B (see page 11). The markings on Coverstitch Table B indicate the distance, in cm and inches, from the coverstitch middle needle. Use it as a guide when positioning the fabric edge.

Set the machine in Threading Position (page 15) and thread the machine.

Set the machine in Sewing Position (page 15) and close the front cover.

Start and End Sewing

When starting to sew after threading the machine, sew aprox 1" (2-3 cm) on a scrap fabric and chain off to make a chain. At end of sewing, pull the fabric lightly to the rear of machine and chain off.

Sewing Tips & Hints

Sewing with Decorative Thread in the Loopers

Heavy decorative threads can be a beautiful highlight to your sewing project. Thread the loopers as described in the threading section (see page 29).

When using decorative threads, remove the spool holder and place the spool caps as shown, to prevent the thread from getting caught on the edge of the spool.

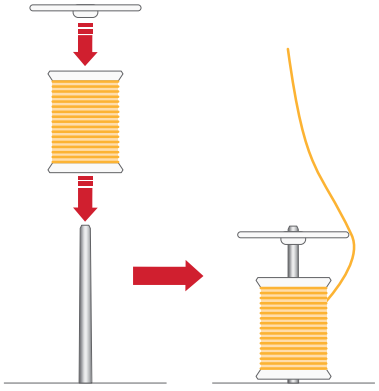

Gathering with Differential Feed

The differential feed can be used to gather lightweight fabrics. Use it for sleeves, making ruffles, and more.

Set the differential feed between 1.5 and 2 to obtain the best gathering effect for your project. Always test sew on a scrap piece of your fabric first. See page 46, to learn how to adjust the differential feed.

Set the stitch length to 4-5 depending on the fabric.

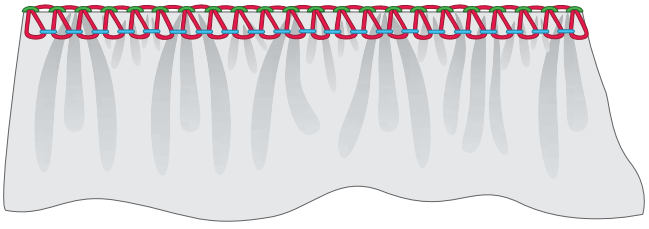

www.sewshop.eu

Sewing Corners

Outer Corners

Trim three of the corners approximately 1¼" (3cm) as illustrated (A). Start sewing at the corner that is not trimmed.

When you reach a corner, stop the machine. Raise the needle and the presser foot. Remove the threads from the stitch finger. Turn the fabric and align the cutting line with the upper knife (B).

Lower the presser foot lifter. Continue to sew from where the previous stitches on the corner ended.

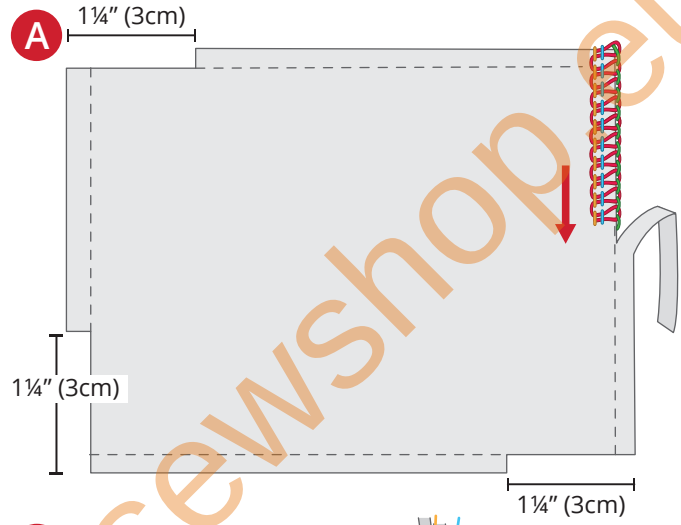

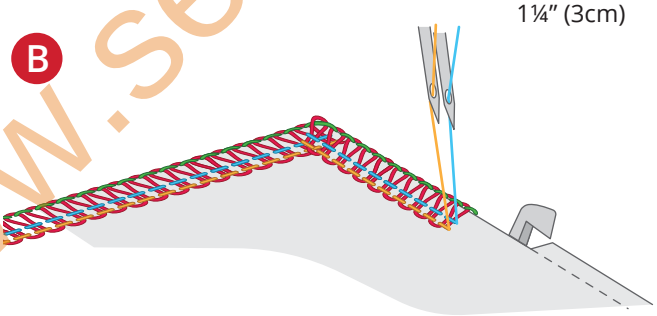

Inner Corners

Cut the inner corner as illustrated (A). Sew and stop approximately 1¼" (3 cm) before the inner corner.

Turn the fabric so that the cutting lines are straight (B).

Continue sewing.

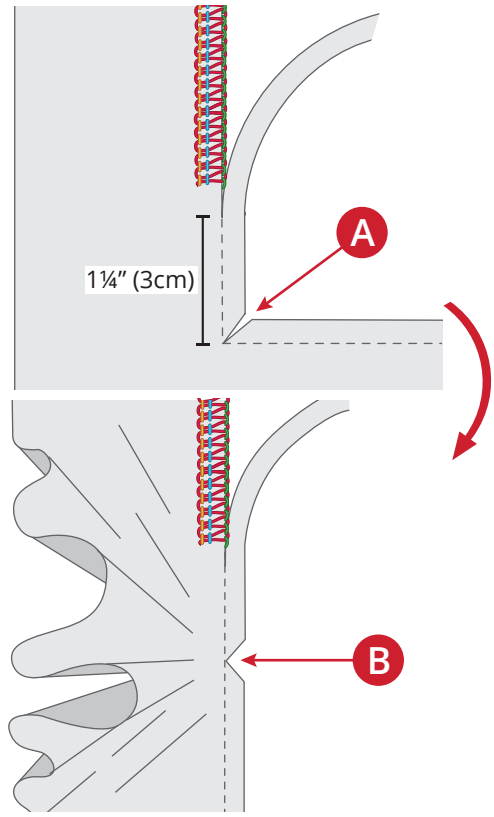

www.sewshop.eu

Circular Sewing

Note: Circular sewing is only suitable for medium and heavy weight fabrics. Stabilizer is also recommended.

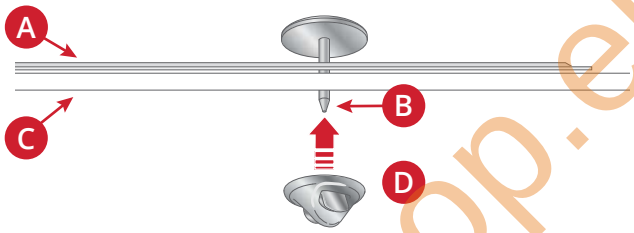

Remove the flat bed extension from the machine (page 10). Attach the extension table. The extension table has 13 holes, to accommodate the Pivot Pin which is used for circular sewing. Sew circles with the upper cutter engaged to get a beautiful edge finish with overlock stitches. Disengage the upper cutter to sew circular embellishments with cover stitches.

Mark a dot on the fabric to designate the center of the circle you want to sew. Place stabilizer underneath the fabric.

Pierce the fabric (A) at the mark with the sharp end of the Pivot Pin (B). Place the end of the pin into the selected hole on the extension table (C). Push the pin and its bottom plate (D) together.

Lower the presser foot and sew. The fabric will feed in a circle around the Pivot Pin.

When the circle is complete, overlap the seam for approximately an inch (2-3cm). Bring the threads into a large-eyed, hand sewing needle and pull them to the wrong side of the fabric and secure.

www.sewshop.eu

5 Stitch Adjustments

Presser Foot Pressure

The presser foot pressure for sewing based on normal conditions should be set to "N"(A). Adjustments may be necessary due to fabric type and weight. Increase or decrease the pressure until you are satisfied with the result. Always test sew on a sample of your fabric before sewing on your garment.

Less pressure: Decrease the pressure by turning the dial in counter-clockwise direction to a value between N and 1.

More pressure: Increase the pressure by turning the dial in clockwise direction to a value between N and 7.

Back to standard setting: Turn the adjustment dial until the mark on the knob is set to N.

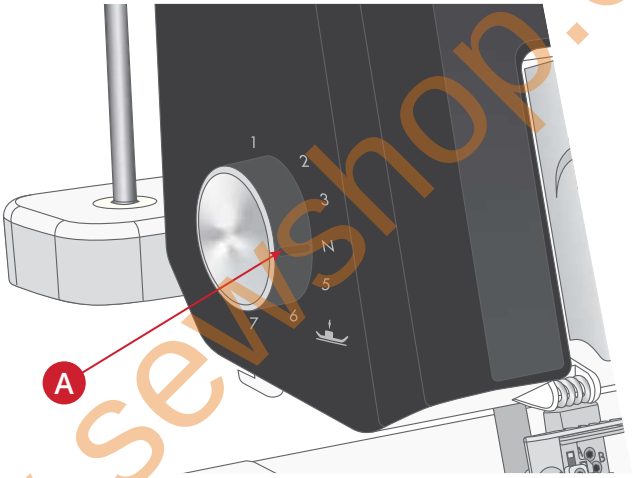

Stitch Width Adjustment

The stitch width can be increased or decreased by changing the needle position or with the cutting width dial.

Adjustment Using Needle Position

When only the left needle, or when both needles are used the stitch width is 6 mm (A).

When only the right needle is used the stitch width is 4 mm (B).

When using the chainstitch needle the stitch width is 9 mm (C).

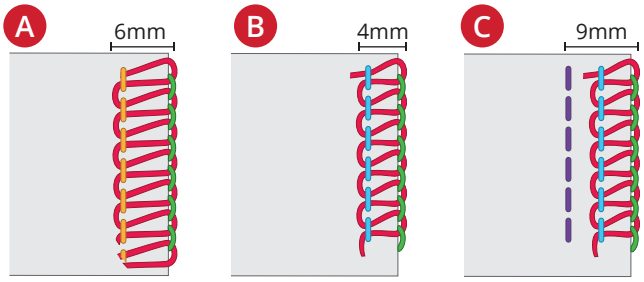

Adjustment Using Cutting Width Dial

The cutting width can be fine tuned by turning the cutting width dial (A). The set value should match the mark on the cover (B). By doing so, the upper cutter position and cutting width can be adjusted within the range shown below.

When only the left needle is used: 5 - 7 mm

When only the right needle is used: 3 - 5 mm

When using the chainstitch needle: 8 - 10 mm

For standard setting the dial should be set to 6.0.

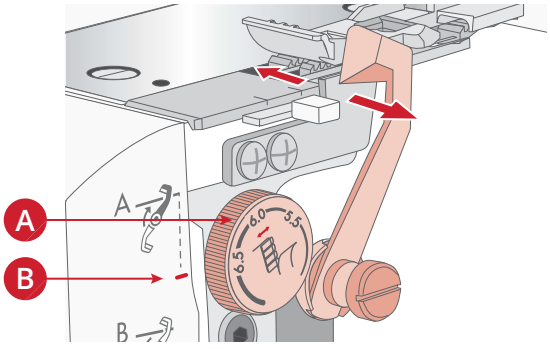

www.sewshop.eu

Stitch Length Adjustments

Stitch length should be set to “2.5” for most sewing conditions, but it may have to be adjusted depending on fabric type. Adjust the stitch length to 3 mm when sewing on heavyweight fabrics. Adjust the stitch length to 2 mm when sewing on lightweight fabrics.

To adjust the stitch length, turn the stitch length dial to the desired value.

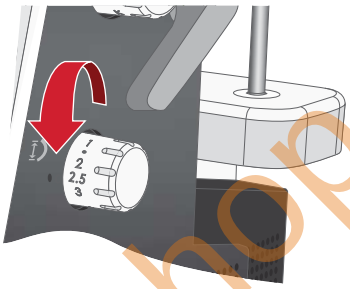

Differential Feed Adjustment

The differential feed system consists of two sets of feed teeth arranged one behind the other. Both feed teeth work independently of each other to give perfect results when sewing on speciality fabrics. When the amount of feed by the front feed teeth is changed in relation to the feed by the rear feed teeth it will "stretch" or "gather" the fabric.

Use the differential feed to prevent stretching of knit fabrics and puckering of lightweight fabrics.

The differential feed should be set to 1.0 for overlock stitching on normal fabric. To adjust the differential feed, turn the dial.

Normally, the seam and fabric should lay flat (A).

If the sewn fabric stretches (B), adjust the value toward 2.0.

If the sewn fabric is gathered (C), adjust the value toward 0.6.

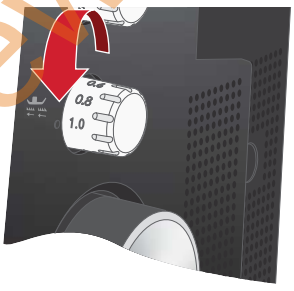

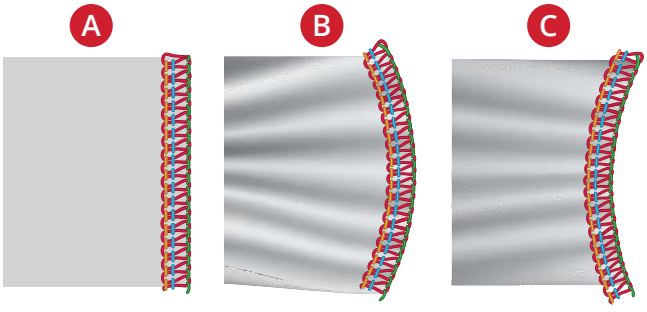

www.sewshop.eu

Thread Tension

Thread tension is automatically set when selecting a stitch but it may have to be fine tuned depending on:

- Type and thickness of the fabric
- Needle size
- Size, type and fiber content of the thread

See page 16 for how to adjust the thread tension settings.

The below describes how the tension settings can be adjusted for 4–thread overlock stitch.

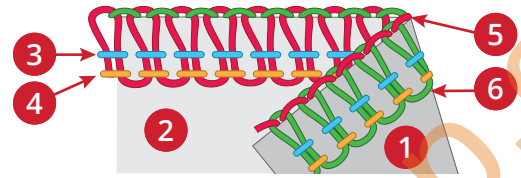

1. Wrong side of fabric
2. Right side of fabric
3. Right needle thread
4. Left needle thread
5. Upper looper thread
6. Lower looper thread

Correct Tension

Lower looper thread and upper looper thread should be well balanced with the same tension (both looper threads should cross at the edge of the fabrics). Needle threads should not be too loose or too tight, but equally balanced tension.

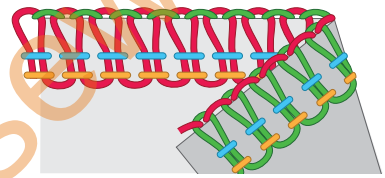

Upper Looper Tension

When the upper looper thread is too loose (A): Tighten the thread tension of the upper looper or loosen the thread tension of the lower looper.

When the upper looper thread is too tight (B): Loosen the thread tension of the upper looper or tighten the thread tension of the lower looper.

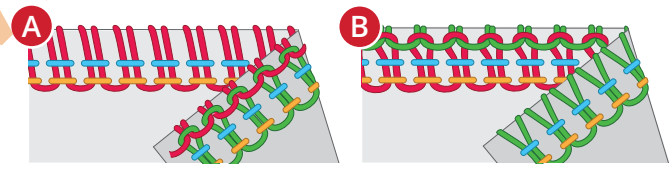

Lower Looper Tension

When the lower looper thread is too loose (C): Tighten the thread tension of the lower looper or loosen the thread tension of the upper looper.

When the lower looper thread is too tight (D): Loosen the thread tension of the lower looper or tighten the thread tension of the upper looper.

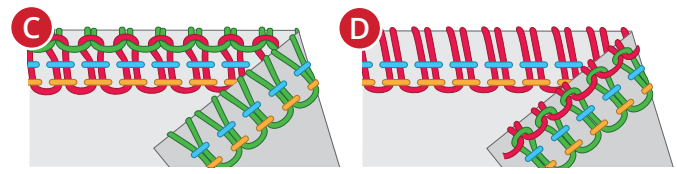

Left Needle Tension

When the left needle thread is too loose (E): Tighten the thread tension of the left needle or loosen both looper threads.

When the left needle thread is too tight (F): Loosen the thread tension of the left needle.

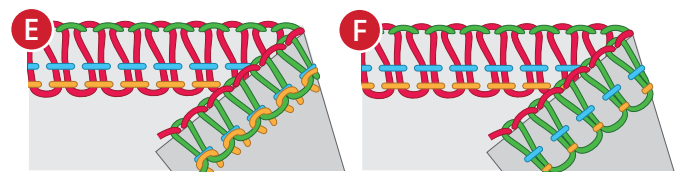

Right Needle Tension

When the right needle thread is too loose (G): Tighten the thread tension of the right needle.

When the right needle thread is too tight (H): Loosen the thread tension of the right needle.

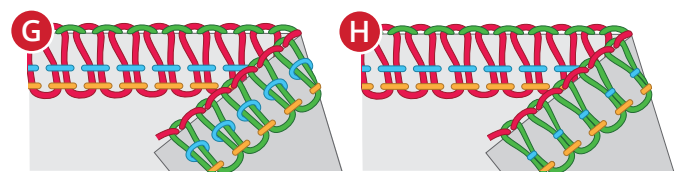

www.sewshop.eu

6 Maintenance

Cleaning

After use, wipe the exterior surface of your machine and the touch screen with a soft and damp cloth to remove any dust or lint built up.

Cleaning the Looper Area

⚠ *Turn off the main power switch and unplug the machine.*

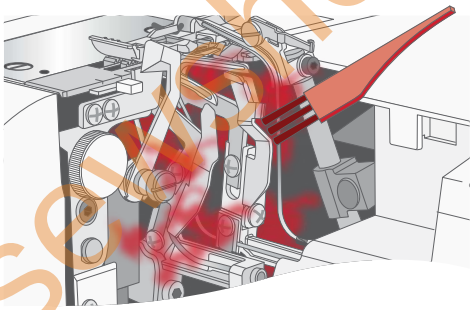

Open the front cover.

With a forward brushing movement, use the lint brush to remove any lint.

Note: You may use a vacuum cleaner to clean the upper knife area or feed teeth.

Cleaning the Looper Threading Pipes

Use the looper threading wire to clean the pipe of the looper threader device.

Set the Threading/Sewing lever to "Threading" position by sliding it to the left.

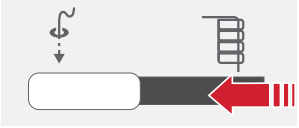

Threading Position

Turn the handwheel slowly toward you until it will click and is locked in threading position.

Take the looper threading wire and push the straight end (not the loop end) through the looper threader hole until it comes out from the hole of the looper tip (A).

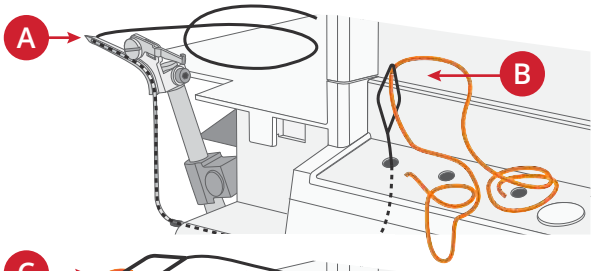

Use a 60wt thread about 24" (60cm) long to clean the looper threader pipes. Pass the thread through the loop of the looper threading wire until the loop is at the halfway point of the thread (B).

Carefully pull the end of the looper threading wire until the thread comes out from the hole of the looper tip (C).

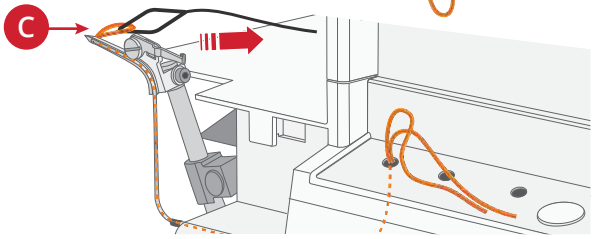

Pull the thread until it is all the way through the threader pipe.

Repeat the above procedure 2-3 times.

With the machine unthreaded, push the looper threader button 4-5 times to clean out the remaining lint (D).

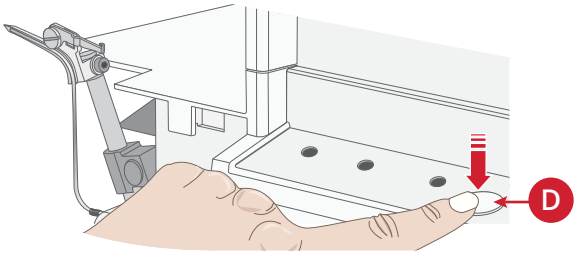

Set the Threading/Sewing lever to "Sewing" position.

Close the front cover.

Note: Clean the looper threader pipe once every 10 hours of use or when the looper threader does not work well.

Tip: Also clean the looper threading pipes if you experience that your stitches turn out irregular and other adjustments does not work.

Tip: You can also use an compressed air duster or camera dust blower to clean the looper threader pipe.

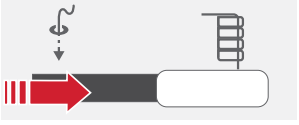

Sewing Position

www.sewshop.eu

Oiling

⚠ *Turn off the main power switch and unplug the machine.*

To keep the machine running smoothly and quietly the moving parts (on the upper looper), pointed out in the picture, must be lubricated often. We recommend lubricating once a week for normal use or once every 10 hours of continuous use.

Use sewing machine oil. Do not use any other oil, it could damage the machine.

With the machine unthreaded, place a scrap of fabric under the presser foot and run the machine for a few minutes.

Wipe the machine surface to remove all excess oil before sewing.

⚠ *Important when oiling!*

Never inject oil into the looper threader holes, the pipe openings or the looper tips (marked in red in the picture).

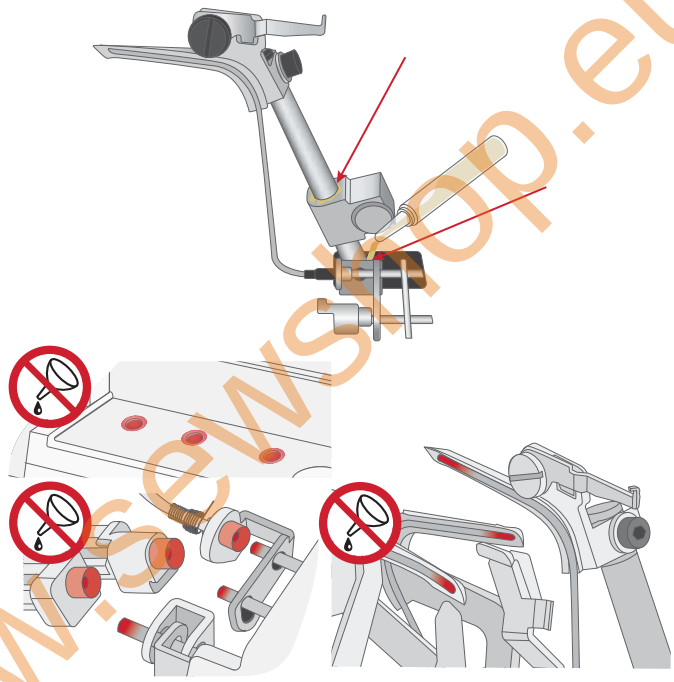

Replace the Upper Cutter

⚠ *Turn off the main power switch and unplug the machine.*

The movable upper cutter should be changed when it becomes dull. The upper cutter can be replaced according to the following directions. If you are having any difficulties, consult your authorized service technician.

Open the front cover and set the movable upper cutter (A) in A position (see page 14).

Loosen the set screw (B), by turning it towards you, and remove the upper cutter.

Turn the handwheel until the upper cutter holder is in its lowest position.

Place a new upper cutter in the groove of the upper cutter holder and tighten the set screw (C).

Make sure the front edge of the movable upper cutter is 0.5-1.0 mm lower than the cutting edge of the stationary cutter (D).

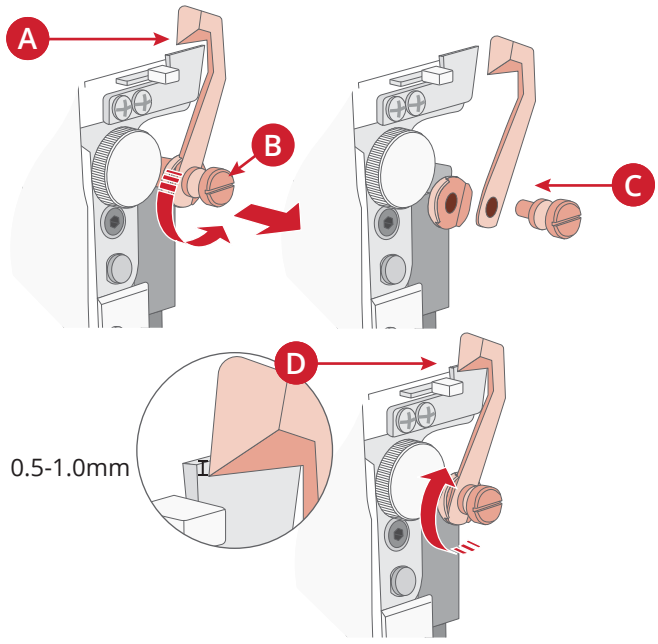

Storage

When the machine is not in use, be sure to keep it unplugged. Cover the machine with the soft dust cover to protect it and store the machine, so it is not exposed to direct sunlight or humidity.

Servicing

If you have any questions regarding service and/or operation, contact our Customer Care department.

www.sewshop.eu

Trouble Shooting

Machine Does Not Run

Possible Cause: Machine not properly connected to power source.

Solution: *Check that machine has been properly connected to power source (page 8).*

Possible Cause: The safety device is activated.

Solution: Close open covers and lower the presser foot.

Fabric Does Not Feed Well

Possible Cause: Stitch length is set too short for the fabric being sewn.

Solution: *Increase the stitch length setting (, page 46).*

Possible Cause: Differential feed is not set in the correct position for the fabric being sewn.

Solution: *Adjust the differential feed (, page 46).*

Possible Cause: Presser foot pressure not correctly set for fabric being sewn.

Solution: *Adjust presser foot pressure (page 45).*

Needle Breaks

Possible Cause: Needle may not be properly seated in the needle clamp.

Solution: *Insert needle so that it is all the way up in the needle clamp, then tighten the screw securely (page 13).*

Possible Cause: Manually pulling fabric from behind presser foot while sewing which causes needles to deflect.

Solution: *Refrain from pulling fabric manually; allow feed teeth to draw fabric under presser foot.*

Possible Cause: Needle may not be the correct size for the fabric being sewn.

Solution: *Use a needle size that is compatible for the fabric (page 17).*

Thread Breaks

Possible Cause: Machine may not be threaded correctly; threads threaded in the incorrect sequence.

Solution: *Check that machine is threaded in correct order (from left to right).*

Possible Cause: Thread is not unreeling smoothly off the thread spool.

Solution: *Check the thread spool to ensure thread is not getting caught.*
Place the thread spool and spool cap as shown on page 18.

Possible Cause: Needle(s) may have a bent, dull or broken point.

Solution: *Replace needle(s) (page 13).*

Possible Cause: The needle is inserted incorrectly.

Solution: *Insert the needle correctly (page 13).*

Possible Cause: Using thread that is poor quality or has uneven filament.

Solution: *Use good quality thread with a smooth, even filament.*

Possible Cause: Thread tension is set too tight.

Solution: *Loosen thread tension (page 16, page 47).*

Possible Cause: Thread is caught in one of the thread guides.

Solution: *Check threading path to ensure all threads are feeding smoothly.*

www.sewshop.eu

Stitches Skipping

Possible Cause: Needle(s) may have a bent, dull or broken point.

Solution: *Replace needle(s) (page 13).*

Possible Cause: Needle may not be properly seated in the needle clamp.

Solution: *Insert needle so that it is all the way up in the needle clamp, then tighten the screw securely.*

Possible Cause: Needle may not be the correct size for the fabric being sewn.

Solution: *Use a needle size that is compatible for the fabric (page 17).*

Possible Cause: Machine may not be threaded correctly or threads were threaded in the incorrect sequence.

Solution: *Check that machine is threaded in correct order as shown in machine manual (from left to right).*

Possible Cause: Using thread that is poor quality or has uneven filament.

Solution: *Use good quality thread with a smooth, even filament.*

Irregular Stitches

Possible Cause: Stitches are not balanced.

Solution: *Adjust thread tensions and possibly cutting width (page 16, page 45).*

Possible Cause: Thread is not unreeling smoothly off the thread spool.

Solution: *Check the thread spool to ensure thread is not getting caught.*

Place the thread spool and spool cap as shown on page 18.

Possible Cause: Machine may not be threaded correctly or threads threaded in the incorrect sequence.

Solution: *Check that machine is threaded in correct order (from left to right).*

Possible Cause: There is lint or dust in the looper threading pipes.

Solution: *Clean the looper threading pipes as described in page 48.*

Fabric Puckers

Possible Cause: Thread tensions are set too tightly.

Solution: *Loosen thread tensions (page 16, page 47).*

Possible Cause: Thread is not unreeling smoothly off the thread spool.

Solution: *Check the thread spool to ensure thread is not getting caught.*

Place the thread spool and spool cap as shown on page 18.

Possible Cause: Using thread that is poor quality or has uneven filament.

Solution: *Use good quality thread with a smooth, even filament.*

Possible Cause: Stitch length is set too short.

Solution: *Adjust stitch length to a longer setting (page 46,).*

Possible Cause: Differential Feed is not set in the correct position for the fabric being sewn.

Solution: *Adjust the differential feed (page 46).*

Irregular Trimming

Possible Cause: Upper— and stationary cutters are not in proper position.

Solution: *Check alignment of cutters (page 49).*

www.sewshop.eu

Possible Cause: Cutter(s) are damaged or worn out.

Solution: *Replace one or both cutters (page 49).*

Fabric Jams

Possible Cause: Upper— and stationary cutters are not in proper position.

Solution: *Check alignment of cutters (page 49).*

Possible Cause: Thread is not unreeling smoothly off the thread spool.

Solution: *Check the thread spool to ensure thread is not getting caught.*

Place the thread spool and spool cap as shown on page 18.

Possible Cause: Too much fabric thickness.

Solution: *Compress thick layers with conventional sewing machine before sewing on your overlock machine.*

The Looper Threader Does Not Work

Possible Cause: The Threading/Sewing lever is not set to the "Threading" position.

Solution: *Set the Threading/Sewing position lever to threading position (page 15).*

Possible Cause: The thread is not correctly inserted into the looper threader hole.

Solution: *Insert at least 1" (2 cm) of thread into the looper hole.*

Possible Cause: The thread is not long enough.

Solution: *Pull out approximately 22" (56 cm) of thread before putting it in the looper threading hole.*

Possible Cause: The thread is tangled, wet or frayed.

Solution: *Trim the thread end.*

Possible Cause: Lint is accumulated in the looper threader pipe.

Solution: *Clean the looper threading pipe (page 48).*

www.sewshop.eu

Technical Specifications

Sewing Speed Maximum 1100 ± 150rpm	**Stitch Length** 1–5mm	**Presser Foot Rise** 6mm
Needles PFAFF® ELx705 #90/14, #12/80	**Stitch Width — Overlock Stitch** 3–7 mm	**Weight** 10.8kg
Number of Needles 1–3	**Differential Feed Ratio** 0.6–2.0	**Machine Dimensions** Width: ≈420mm Depth: ≈300mm Height: ≈300mm
Number of Threads 2–5	**Type of Lamp** LED light x5	**Rated Voltage** 120V/60Hz (North America) 230V/50Hz (Europe)
Protection Class II (Europe)	**Power Rating** Machine: 113Watt LED Light: 1.6Watt	

www.sewshop.eu

www.sewshop.eu

We reserve the right to change the machine equipment and the assortment of accessories without prior notice, or make modifications to the performance or design. Such modifications, however, will always be to the benefit of the user and the product.

www.sewshop.eu

INTELLECTUAL PROPERTY

ADMIRE, PFAFF, and PERFECTION STARTS HERE are trademarks of KSIN Luxembourg II, S.a.r.l.

Please note that on disposal, this product must be safely recycled in accordance with relevant National legislation relating to electrical/ electronic products. Do not dispose of electrical appliances as unsorted municipal waste, use separate collection facilities. Contact your local government for information regarding the collection systems available. When replacing old appliances with new ones, the retailer may be legally obligated to take back your old appliance for disposal free of charge.

If electrical appliances are disposed of in landfills or dumps, hazardous substances can leak into the groundwater and get into the food chain, damaging your health and well-being.

Importer to the UK:

VSM UK

Ravensbank House, Ravensbank Drive

North Moons Moat, Redditch. B98 9NA, United Kingdom

Manufacturer

VSM GROUP AB, **SVP Worldwide**

Soldattorpsgatan 3, SE-54474, Jonkoping, SWEDEN

PFAFF

Perfection starts here.™

www.sewshop.eu

www.pfaff.com

4710489-26D · © 2024 KSIN Luxembourg II, S.a.r.l. · All rights reserved