PFAFF

Perfection starts here.™

admire 1000

User's Guide

www.sewshop.eu

This household overlock machine is designed to comply with IEC/EN/CSA C22.2 No. 60335-1 & 60335-2-28 and UL1594.

IMPORTANT SAFETY INSTRUCTIONS

Read all instructions before using this household overlock machine.

When using an electrical appliance, basic safety precautions should always be followed, including the following:

Keep the instructions at a suitable place close to the machine. Make sure to hand them over if the machine is given to a third party.

This appliance can be used by children aged from 13 years and above and persons with reduced physical, sensory or mental capabilities or lack of experience and knowledge if they have been given supervision or instruction concerning use of the appliance in a safe way and understand the hazards involved. Cleaning and user maintenance shall not be made by children without supervision. It is not allowed for children up to and including 13 years to play with the machine. Children up to 13 years are not allowed to use the machine.

WARNING – To reduce the risk of burns, fire, electric shock, or injury to person:

www.sewshop.eu

- A overlock machine should never be left unattended when plugged in. The electrical socket, to which the machine is plugged in, should be easily accessible. Always unplug this overlock machine from the electric outlet immediately after using and before cleaning, removing covers, lubricating or when making any other user servicing adjustments mentioned in the instruction manual.
- Do not allow to be used as a toy. Close attention is necessary when this overlock machine is used by or near children.
- Use this overlock machine only for its intended use as described in this manual. Use only attachments recommended by the manufacturer as contained in this manual.
- Never operate this overlock machine if it has a damaged cord or plug, if it is not working properly, if it has been dropped or damaged, or dropped into water. Return the overlock machine to the nearest authorized dealer or service center for examination, repair, electrical or mechanical adjustment.
- Never operate the overlock machine with any air openings blocked. Keep ventilation openings of the overlock machine and foot control free from the accumulation of lint, dust, and loose cloth.
- Keep fingers away from all moving parts. Special care is required around the overlock machine needle.
- Always use the proper needle plate. The wrong plate can cause the needle to break.
- Do not use bent needles.
- Do not pull or push fabric while stitching. It may deflect the needle causing it to break.
- Wear safety glasses.
- Switch the overlock machine off ("0") when making any adjustment in the needle area, such as threading needle, changing needle, changing presser foot, etc.
- Never drop or insert any object into any opening.
- Do not use outdoors.
- Do not operate where aerosol (spray) products are being used or where oxygen is being administrated.
- To disconnect, turn all controls to the off ("0") position, then remove plug from outlet.
- Do not unplug by pulling on cord. To unplug, grasp the plug, not the cord.

- The foot control is used to operate the machine. Never place other objects on the foot control.
- Do not use the machine if it is wet.
- If the LED lamp is damaged or broken, it must be replaced by the manufacturer or its service agent or a similarly qualified person, in order to avoid a hazard.
- If the cord connected with the foot control is damaged, it must be replaced by the manufacturer or its service agent or a similarly qualified person, in order to avoid a hazard.

SAVE THESE INSTRUCTIONS

We reserve the right to change the machine equipment and the assortment of accessories without prior notice, or make modifications to the performance or design. Such modifications, however, will always be to the benefit of the user and the product.

Intellectual Property

PFAFF, ADMIRE, and PERFECTION STARTS HERE are trademarks of KSIN Luxembourg II, S.a.r.l.

www.sewshop.eu

Please note that on disposal, this product must be safely recycled in accordance with relevant National legislation relating to electrical/electronic products. Do not dispose of electrical appliances as unsorted muncipal waste, use separate collection facilities. Contact your local government for information regarding the collection systems available. When replacing old appliances with new ones, the retailer may be legally obligated to take back your old appliance for disposal free of charge.

If electrical appliances are disposed of in landfills or dumps, hazardous substances can leak into the groundwater and get into the food chain, damaging your health and well-being.

TABLE OF CONTENTS

1. KNOWING YOUR MACHINE **6**
Foot control 8
Power / light switch 8
Opening front cover 8
Opening work table 8
Preparation for threading 9
Thread guide pole 9
Spool discs and spool holders for cone spools 10
Spool nets 10
Waste tray 11
Intergated seam guide 11
Thread knife 11
Changing presser feet 11
Needle / Thread / Fabric Chart 12
12

2. GETTING READY TO SEW
Threading the machine 13
Trimming needle thread 16
Stitch Settings 18
Adjusting thread tensions 24
Basic techniques 28
Turning curved edges 28
Removing stitches from sewn fabric 28
Flatlocking using two threads or using three threads (flat seam) 30
Butted seams using two threads or using three threads (flat seam) 30
Pintucking using three threads 30
Making decorative braid using three threads 30
Differential feed applications 31

3. CARING FOR YOUR MACHINE **32**

4. CHECKING PERFORMANCE PROBLEMS **34**

www.sewshop.eu

SPECIFICATION OF MACHINE

MODEL	admire 1000
Number of threads	2, 3 or 4 threads
Overedge stitch width (Max.)	7 mm (left needle)
Needle	Overlock Needle, Style 2022
Stitch length	1-5mm
Stitching speed	Up to 1300 stitches per minute
Dimensions	Width: 320mm (12.6 inches) Length: 385mm (15.2 inches) Height: 370mm (14.6 inches)
Weight	9 kg (20 Lbs)

www.sewshop.eu

1. KNOWING YOUR MACHINE

Identification chart

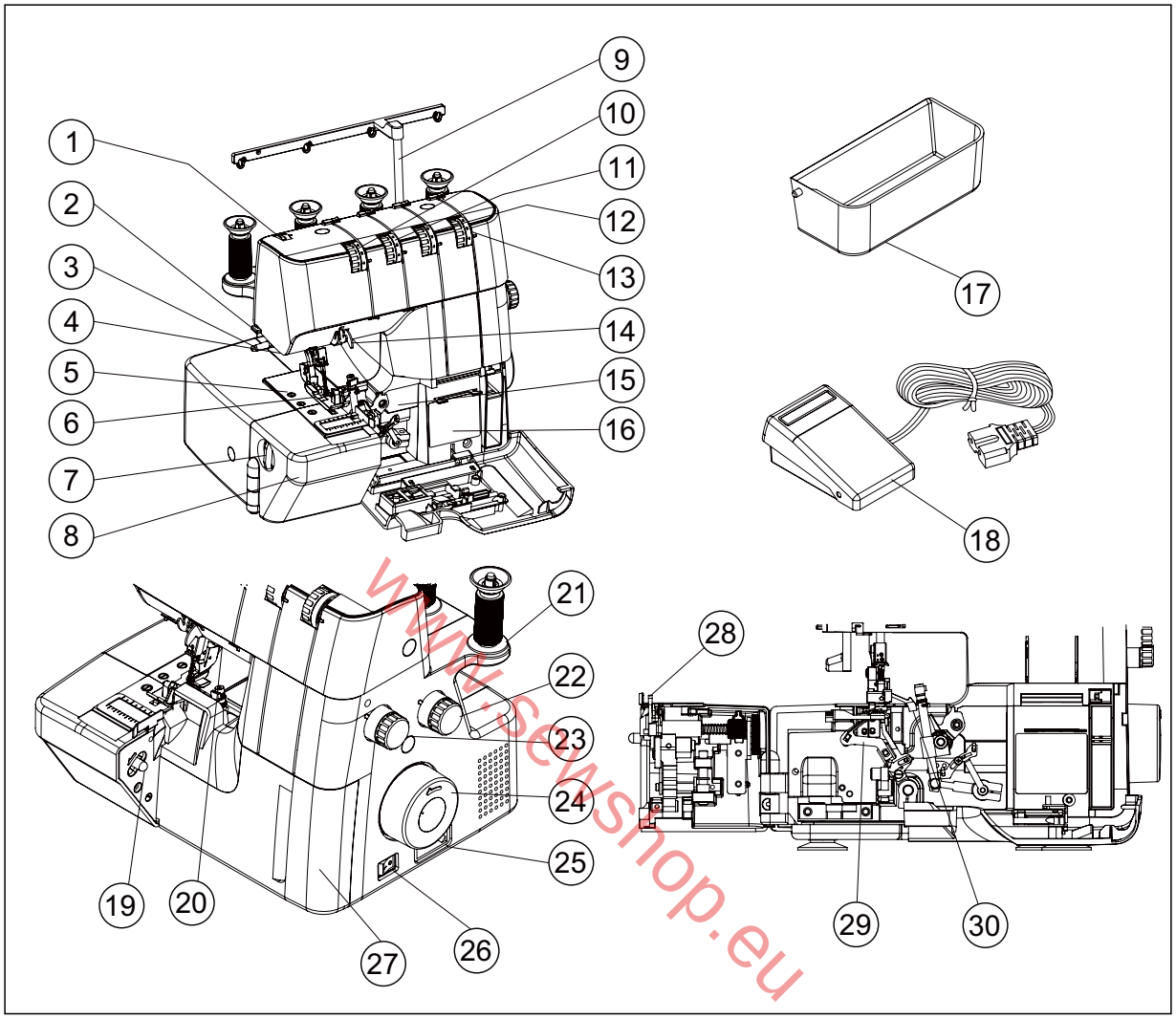

www.sewshop.eu

1. Presser foot pressure regulator
2. Thread knife
3. Presser foot lever
4. LED lamp
5. Needle plate
6. Presser foot
7. Overedge cutting width dial
8. Working table
9. Thread guide pole
10. Left needle thread tension control
11. Right needle thread tension control
12. Upper looper thread tension control
13. Lower looper thread tension control
14. Needle thread guides
15. Two thread converter instruction
16. Threading chart
17. Waste tray
18. Foot control
19. Release lever
20. Foot release lever
21. Spool disc
22. Differential feed control dial
23. Stitch length dial
24. Hand wheel
25. Plug connector socket
26. Light and power switch
27. Front cover
28. Moving cutter
29. Lower looper
30. Upper looper

Accessories

Parts listed are included with your machine.

1. Two-thread converter
2. Stitch finger (B) *(Stitch finger (A) is already on the machine upon delivery.)*
3. Needles
4. Lint brush
5. Screwdriver (small)
6. Soft dust cover
7. Screwdriver (large)
8. Moving cutter
9. Tweezer
10. Wrench
11. Thread spool nets
12. Spool discs
13. Spool holders
14. Accessory bag

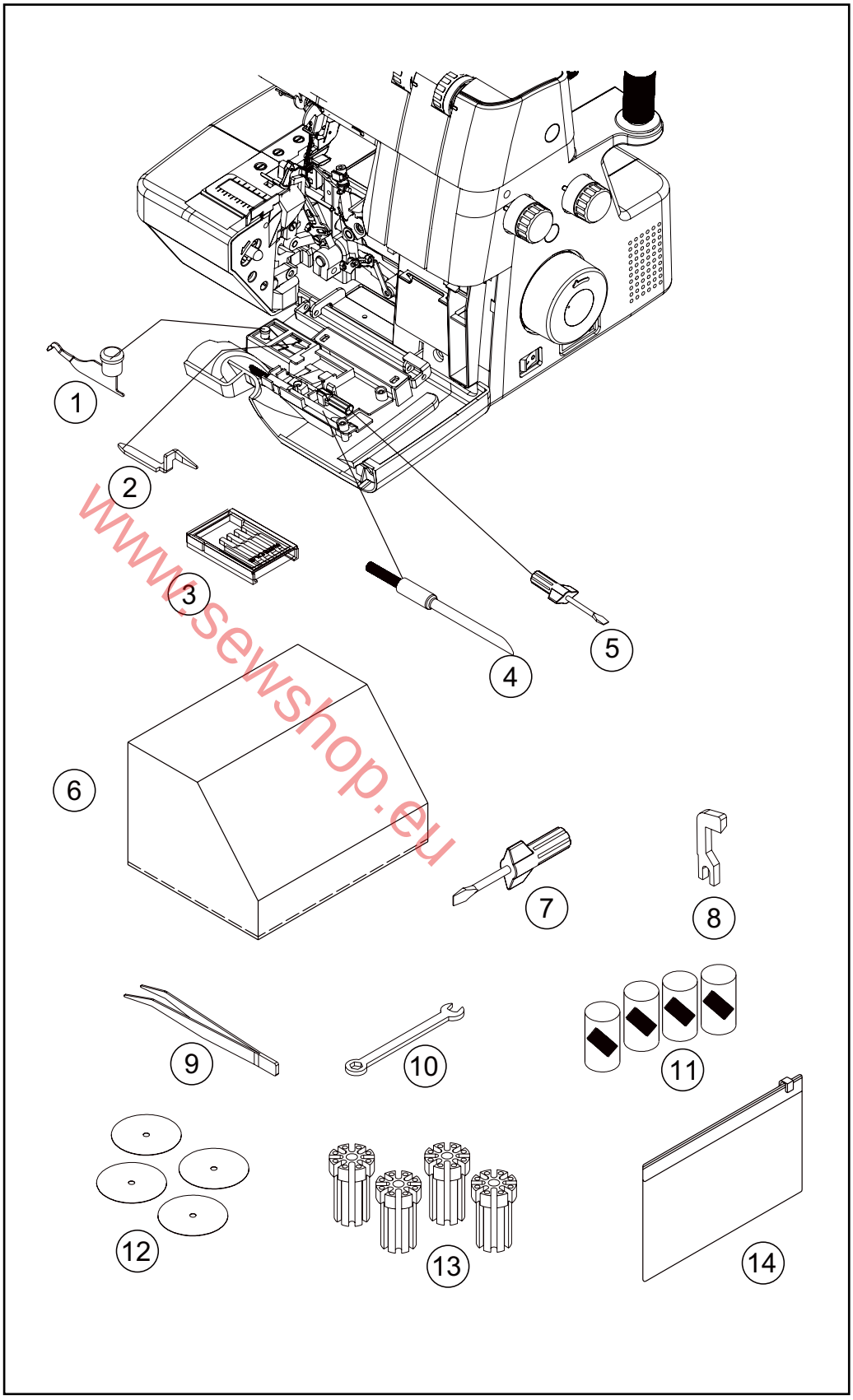

www.sewshop.eu

Setting up your machine

1. Wipe off any excess oil in the needle plate and bed areas.

2. FOOT CONTROL

Push foot control plug into connector socket, and connect the power line plug into power supply outlet.

Be aware that some appliances can be delivered with a polarized plug (one blade wider than the other). To reduce the risk of electric shock, this plug is intended to fit in a polarized outlet only one way. If the plug does not fit fully in the outlet, reverse the plug. If it still does not fit, contact a qualified electrician to install the proper outlet. Do not modify the plug in any way.

3. POWER/LIGHT SWITCH

Your machine will not operate unless the power/light switch is turned on. This same switch controls both machine power and sewing light.

When leaving the machine unattended, or servicing the machine, remove the power line plug from supply outlet.

4. OPENING FRONT COVER

To open front cover, pull it to the right and down towards you.

5. OPENING WORKING TABLE

To open working table, pull the release lever towards you with your right hand, and lift the front of presser foot up with your left hand.

Note: The moving part at the front of the presser foot is for protecting the fingers while sewing. Normally it is down, but can be lifted momentarily to check cutting status.

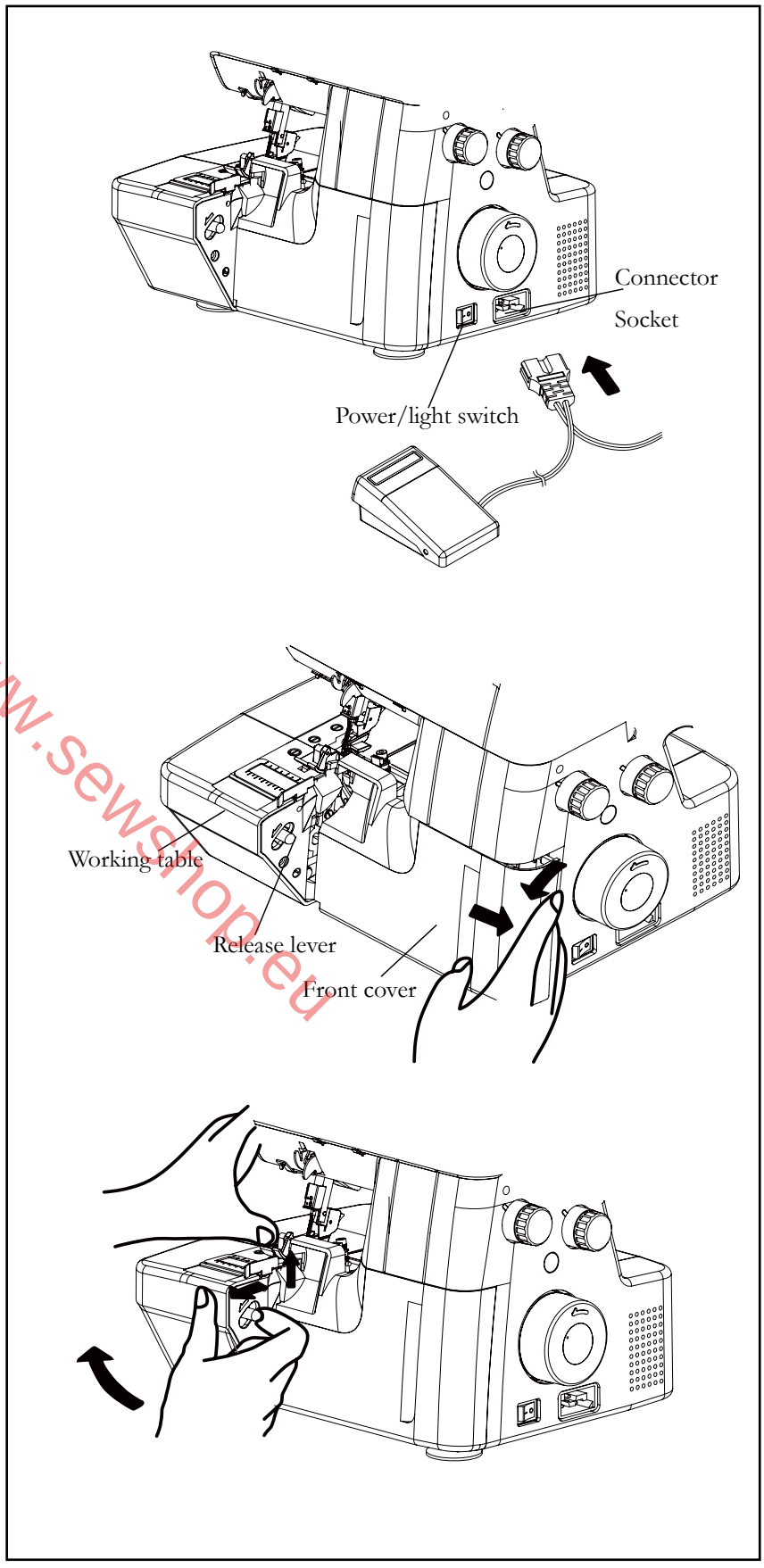

www.sewshop.eu

Thread guide pole

Pull up thread guide pole to the highest point until you hear it click.

Place thread spools on pins and draw thread through thread guides on the pole from back to front.

The thread guides of the pole can help hold thread spools in place while the machine is not in use. Push down on the pole, as illustrated below.

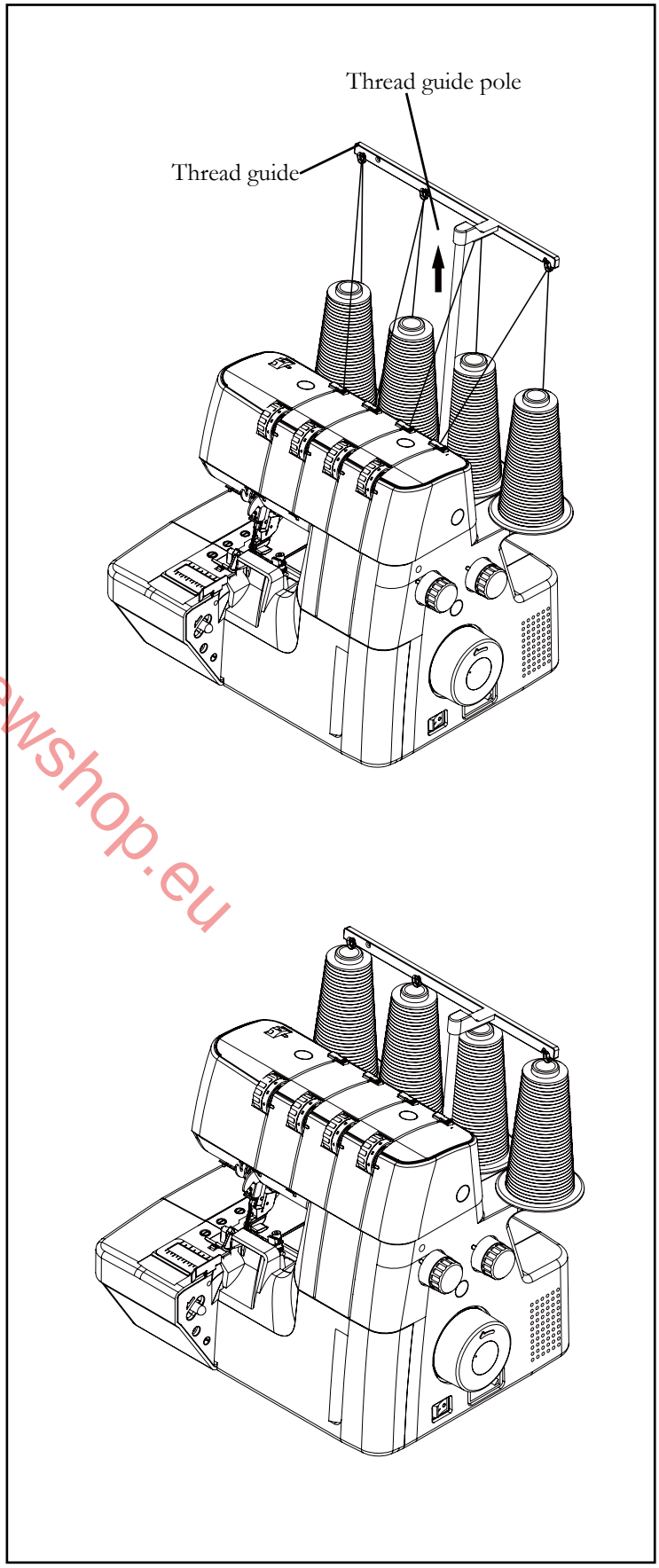

www.sewshop.eu

Spool caps for domestic type spools

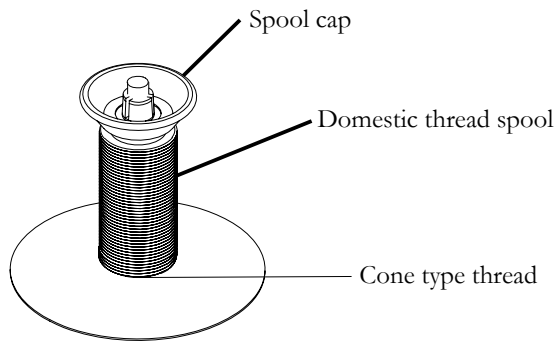

Spool discs and spool holders for cone spools

For large cone spools use the spool holders with the wide end at the top, and for small ones, use the same spool holders but with the narrow end at the top.

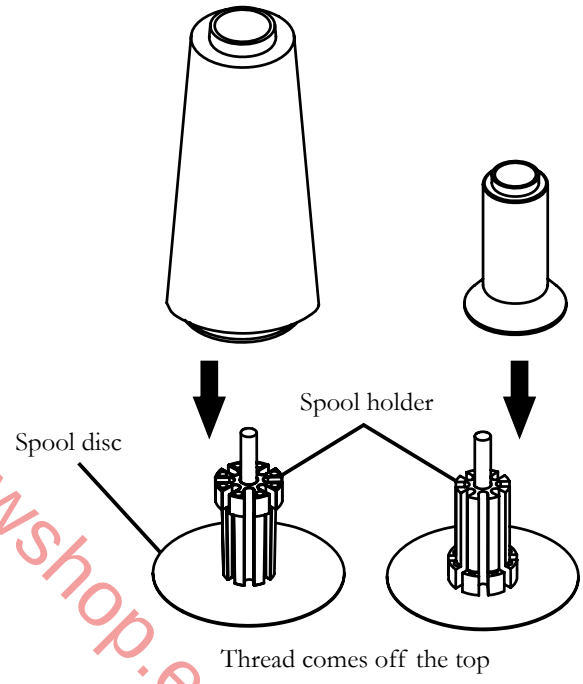

www.sewshop.eu

Spool nets

Polyester or bulky nylon threads may tend to spill from the spool while unwinding. To keep consistent feeding of such threads, utilize spool net sleeving over the spool.

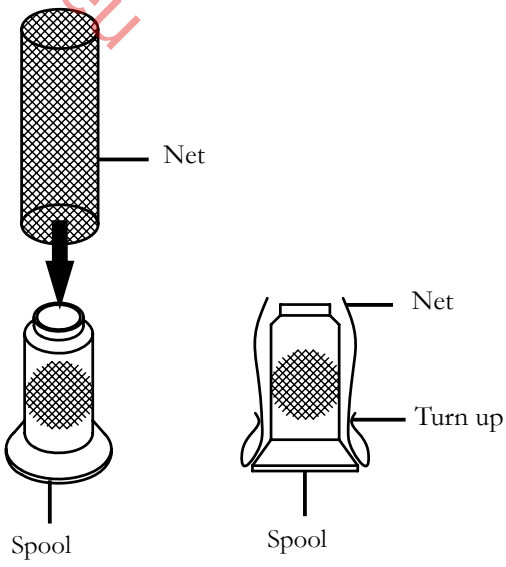

Waste tray

The waste tray can be attached to the machine, and it is used to catch waste trimmings as you sew.

After completion of work, remove the waste tray.

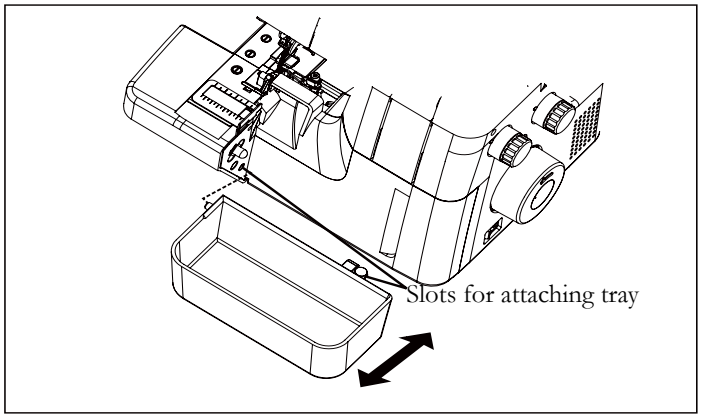

Intergated seam guide

The integrated seam guide helps you sew straight, whether sewing seams or edges. Fabric is placed along the edge of the guide. The guide is adjustable and can be set for desired seam allowance.

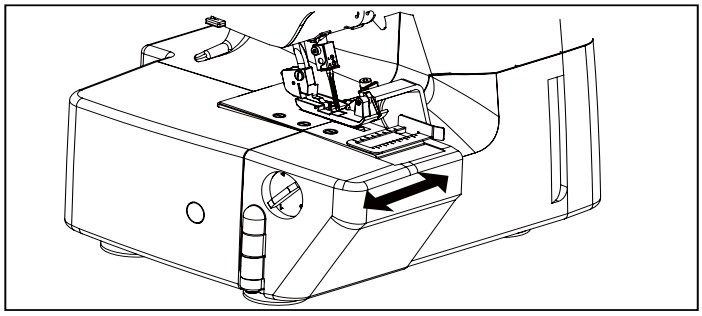

Thread knife

The thread knife is built in, toward the back side of the face cover. Draw the thread chain toward the rear and cut off excess threads with the thread knife, as shown.

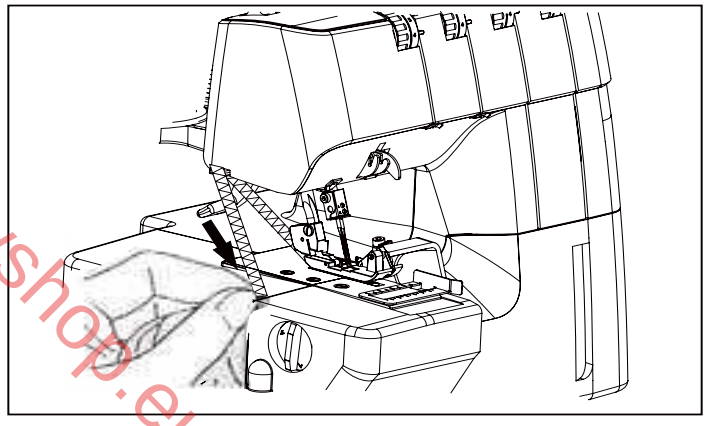

www.sewshop.eu

Changing presser feet

Be sure needle is in the up position.

Raise presser foot lever.

1. Push foot release lever to remove the foot.

2. Place the desired foot on the needle plate aligning needle holes.

3. Lower the presser foot lever and push foot release lever so that the foot holder snaps on the foot.

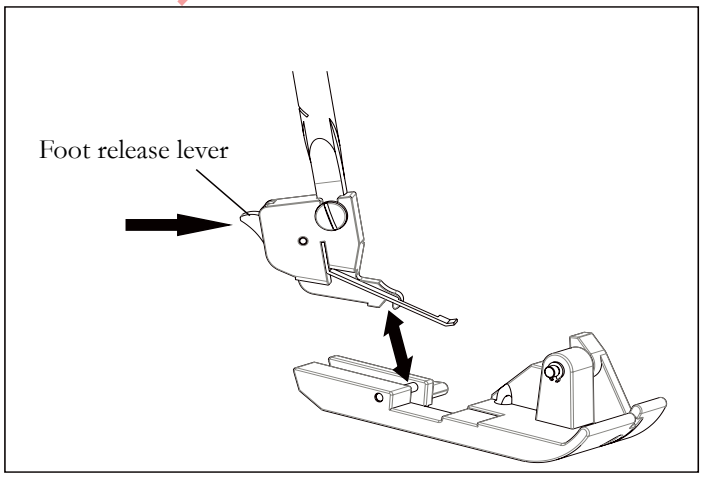

Changing the needle

Raise needle bar to its highest point by turning hand wheel towards you, but leave presser foot down. Loosen needle clamp screw to remove the needle, and place new needle with flat side away from you, into the needle bar as far as it will go, and tighten screw.

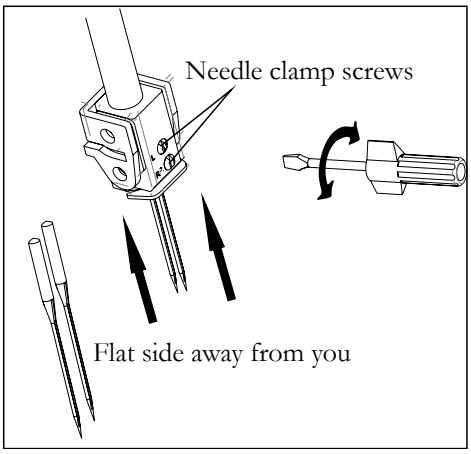

Fabric / Needle / Thread Chart

Your machine uses Style 2022 overlock needles. There are two Style 2022 needles, size 90/14, already inserted.

The additional needles in your included accessories are 3 more size 90/14 needles and 2 size 80/12 needles.

Light Fabric	*Medium Fabric*	*Heavy Fabric*	*Knits*
(voile, crepe, georgette, etc.)	(cotton, linen, chino, wool, satin, etc.)	(denim, tweed, etc.)	Stretch fabrics
Needles	*Needles*	*Needles*	*Needles*
Style 2022, size 80/12	Style 2022, size 80/12	Style 2022, size 90/14	Style 2022, size 80/12
Thread			
Thread suitable for overlock machines			

www.sewshop.eu

Synthetic threads are recommended for ordinary overlocking. Polyester thread, for example, is very useful for different types of fabric.

NOTE: Keep in mind that the lower and upper loopers will use about twice the amount of thread as the needles. When purchasing thread for sewing, therefore, especially if it is an special colour, you should buy sufficient for your requirements.

2. GETTING READY TO SEW

Threading your machine

Wrong threading may cause skipped stitches, breaking threads, or other problems.

Try to master the correct threading before moving on to test sewing.

Threading must be carried out in the sequence of Upper Looper - Lower Looper - Needle.

Open the front cover and the working table.

Raise needle to its highest point by turning hand wheel towards you, and raise the presser foot.

Before re-threading the lower looper after a thread break, remove thread from needle eye first, then re-thread the lower looper. This will prevent tangling.

Threading upper looper

1. Feed the thread through the thread guides as illustrated.
2. Pull the upper thread through the slot, holding the thread with your left hand.
3. Draw the thread through the thread guide as illustrated.
4. Pass the thread through wire thread guide and looper eye, leaving an excess length of about 4" (10 cm).

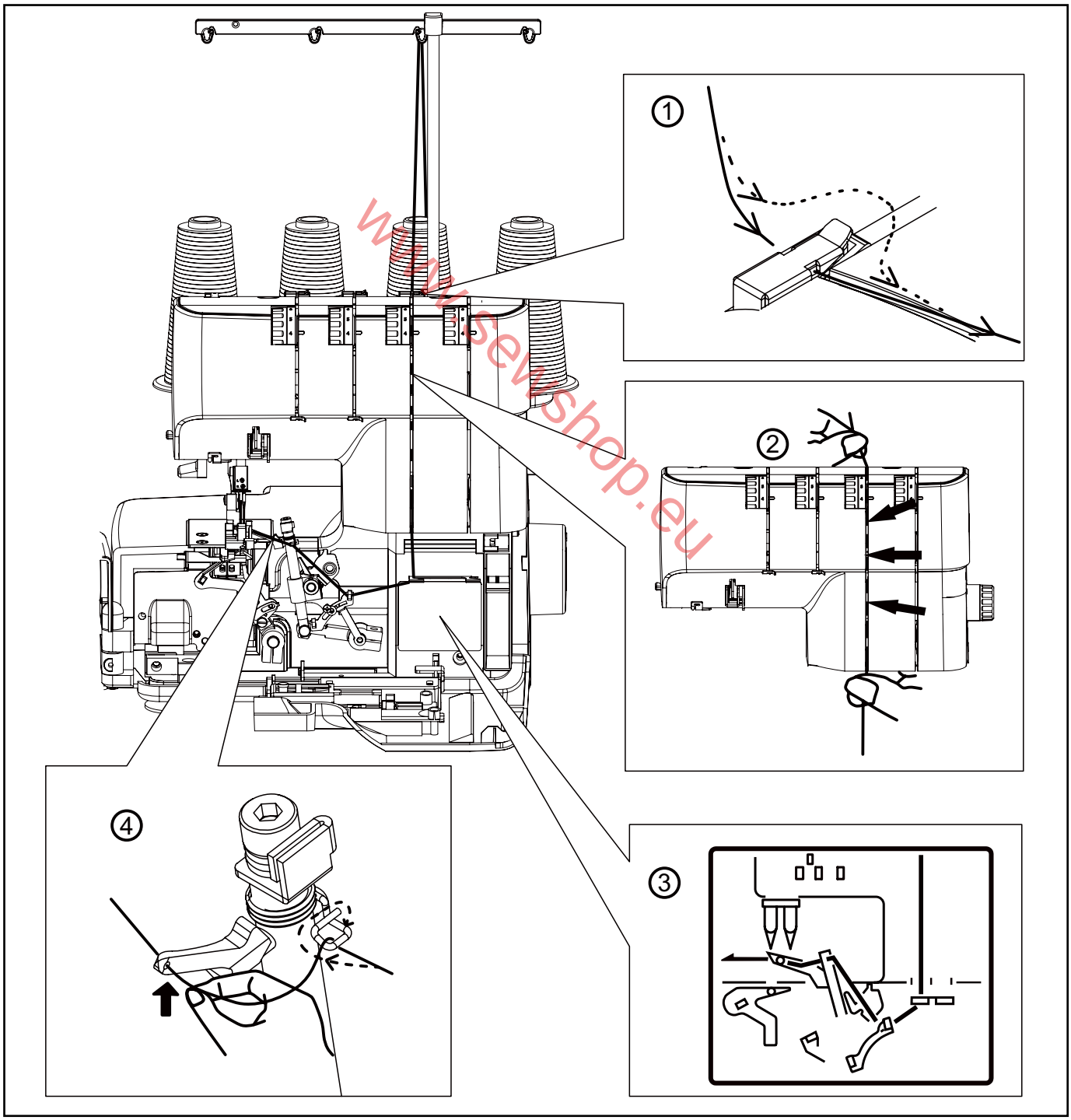

www.usewshop.eu

Threading lower looper

1. Feed the thread through the thread guide as illustrated.
2. Pull the lower thread through tension slot. Holding the thread with your left hand, pull down with right hand firmly.
3. Draw the thread through thread guides as illustrated.
4. Pass the thread through lower looper eye, and then place the thread over the upper looper. Make sure the thread is over the upper looper (not under it), or the machine will not sew. Leave about 4” (10cm) extra thread.

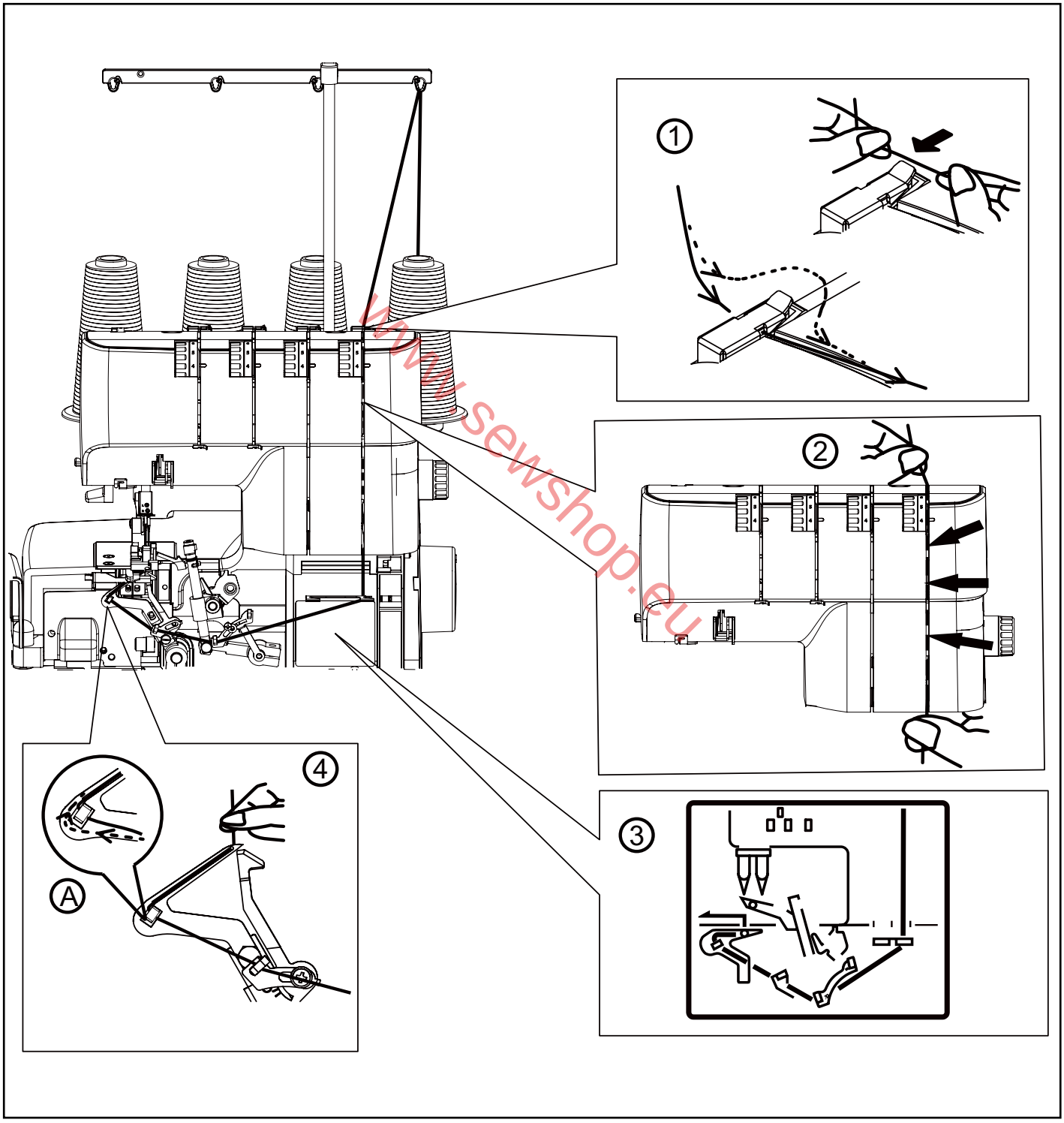

www.sewshop.eu

Threading needles

1. Feed the thread through the thread guide as illustrated.
2. Draw the needle threads through needle thread tension slots. Holding the thread with your left hand, pull down with right hand firmly.
3. Draw the thread through the thread guides as illustrated.
4. Thread the needles from front to back through needle eye and pull the threads towards the back passing along the right side of presser foot, leaving an extra length of about 4”(10cm).

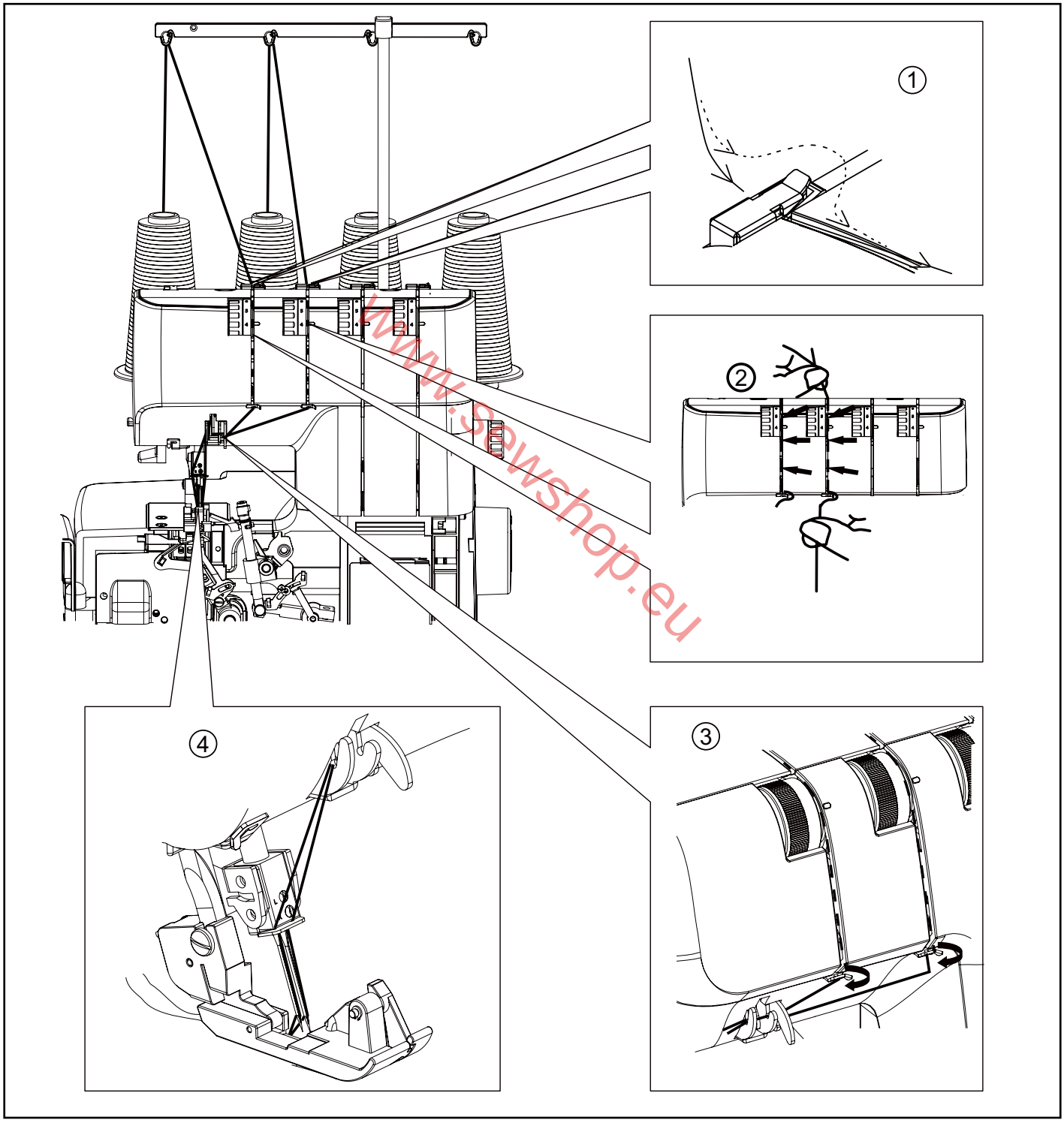

www.sewshop.eu

Helpful hints

Replacing thread spools

When replacing thread spools, the following steps may be helpful for quick changeover.

1. Cut off existing threads near the spools. Tie the cut ends thread from new spools as illustrated.
2. Raise presser foot.
3. Lower needle bar to its lowest position by turning hand wheel away from you. Carefully pull the existing threads until the connecting knots pass through needle eye and looper eyes.

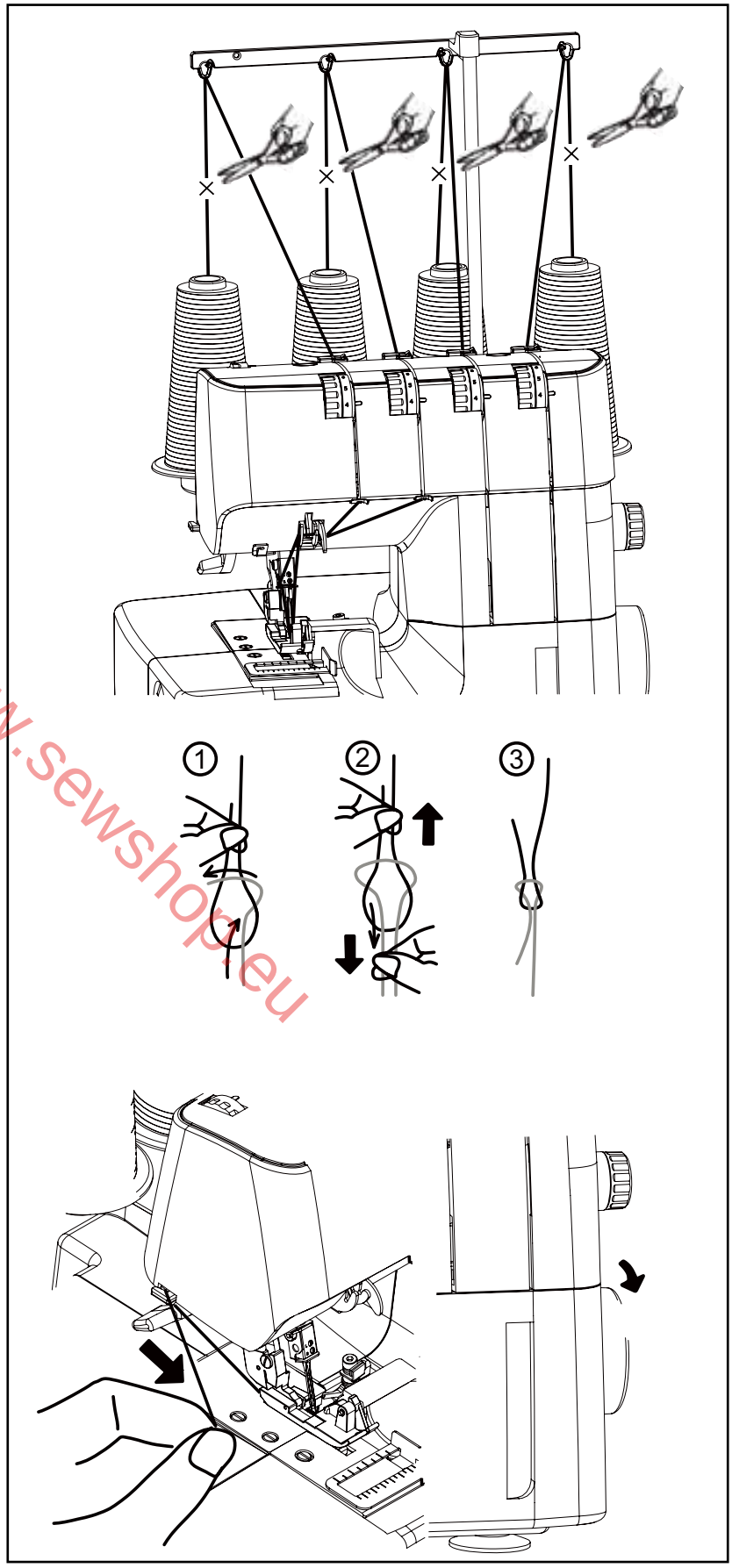

www.sewshop.eu

Trimming needle thread

Frayed thread may make needle threading difficult.

Draw the thread passing under the thread knife and turn hand wheel towards you to obtain clear cut end as illustrated.

Testing overlock stitches

After threading is completed, use a scrap of the same fabric you are planning to sew on and test sew following the instructions below.

1. With all threads under the presser foot, gently pull all threads to the left, then lower the presser foot. Rotate the hand wheel towards you a few times to see if the lock stitches are properly formed.

2. Start the machine at low speed and feed in test fabric under the presser foot by slightly pushing it forward. (This can be done with the presser foot down on most fabrics except bulky materials.)

Guide the fabric gently as machine automatically feeds the fabric.

3. Check thread tensions by test sewing on spare fabric.

4. At fabric end, carry on running machine at low speed, gently pulling the fabric towards the back, until about 5 to 6cm (2 to 2.5") of extra lock stitches are produced without fabric.

5. Cut thread by thread knife on face cover, or with scissors.

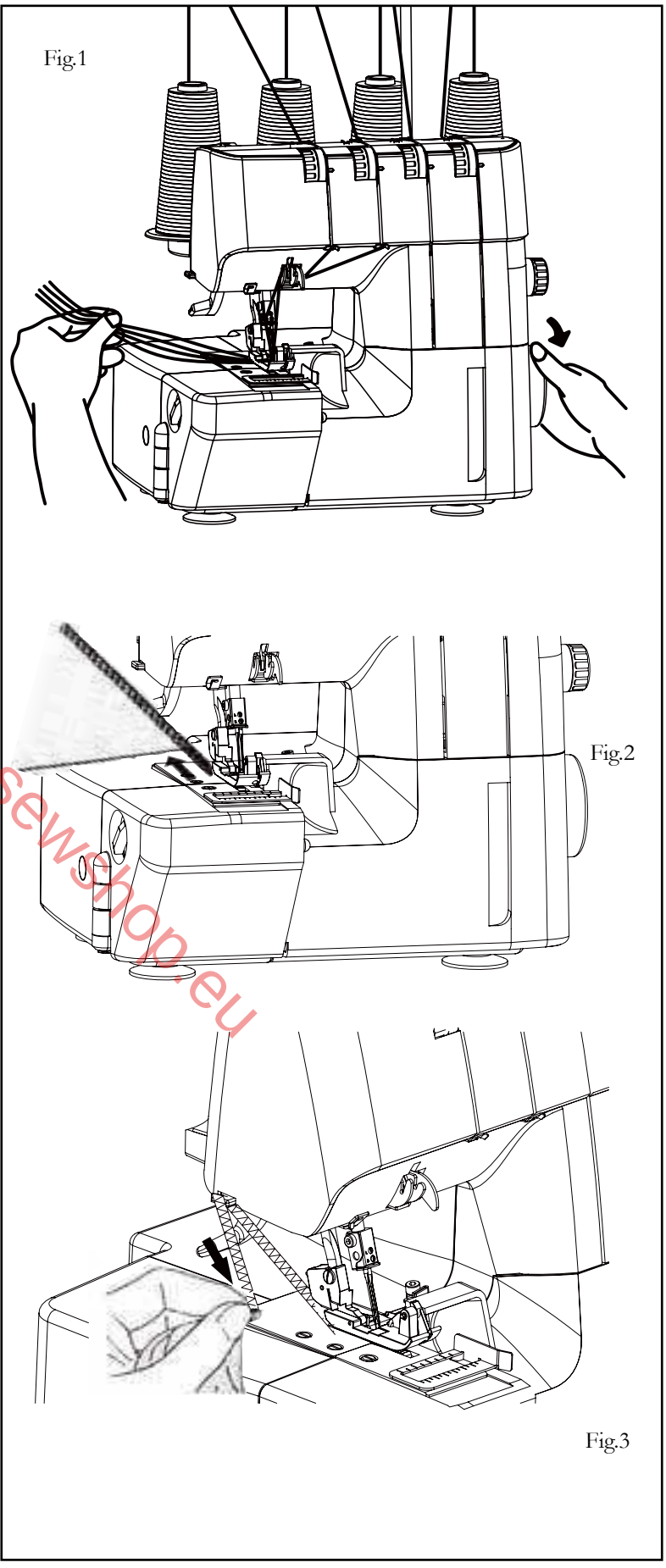

www.sewshop.eu

STITCH SETTINGS

Combination / Stitch	Needle position	Cutting width	Stitch length	Number of threads	Stitch finger	2-thread converter	Tension			
							Left Needle	Right Needle	Upper looper	Lower looper
2-thread overlock, wide	Left	6	2.5	2	A	Yes	1	---	---	7
2-thread overlock, narrow	Right	6	2.5	2	B	Yes	---	1	---	8.5
2-Thread wrapped edge overlock, wide	Left	6	3.5	2	A	Yes	4	---	---	1
2-Thread wrapped edge overlock, narrow	Right	6	3	2	B	Yes	---	4	---	5

www.sewshop.eu

Combination / Stitch	Needle position	Cutting width	Stitch length	Number of threads	Stitch finger	2-thread converter	Tension			
							Left Needle	Right Needle	Upper looper	Lower looper
2-thread rolled edge 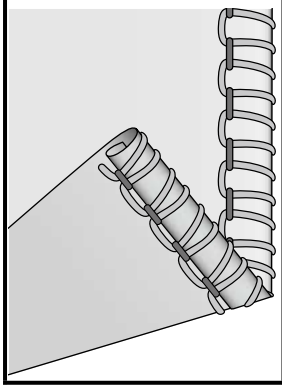	Right	6	2	2	None	Yes	---	5	---	4
2-thread narrow edge 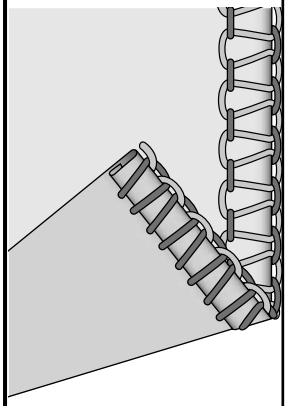	Right	4	2	2	None	Yes	---	1	---	8.5
2-thread flatlock stitch 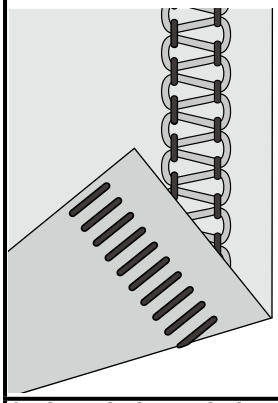	Left	6	2.5	2	A	Yes	1	---	---	5.5
3-Thread picot stitch 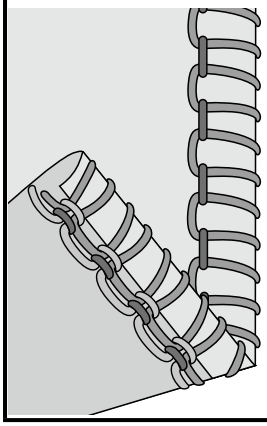	Right	7	P	3	None	No	---	4	3.5	5.5

www.sewshop.eu

Combination / Stitch	Needle position	Cutting width	Stitch length	Number of threads	Stitch finger	2-thread converter	Tension			
							Left Needle	Right Needle	Upper looper	Lower looper
3-thread overlock stitch, wide 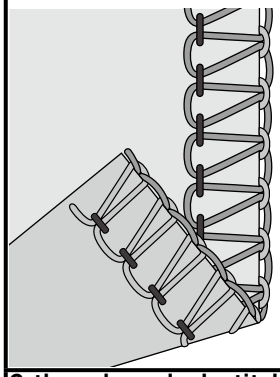	Left	6	3	3	A	No	4	---	4	3.5
3-thread overlock stitch, narrow 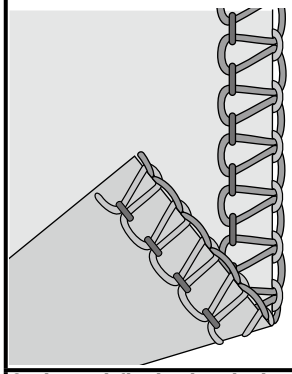	Right	6	3	3	B	No	---	4	5	4
3-thread flatlock stitch, narrow 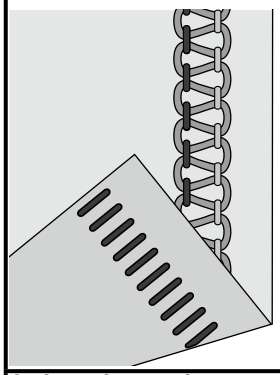	Right	5	3	3	B	No	---	0	4	9
3-thread stretch overlock 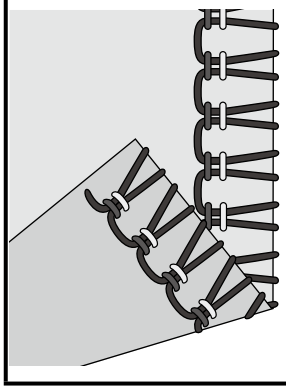	Left & Right	6	P	3	A	Yes	4	4	---	2

www.sewshop.eu

Combination / Stitch	Needle position	Cutting width	Stitch length	Number of threads	Stitch finger	2-thread converter	Tension			
							Left Needle	Right Needle	Upper looper	Lower looper
3-thread rolled edge 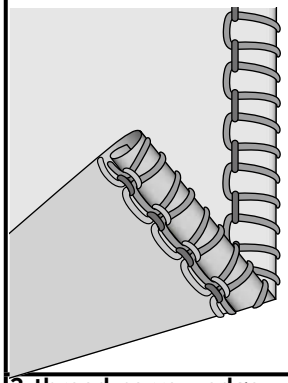	Right	6	R	3	None	No	---	4.5	3.5	4
3-thread narrow edge 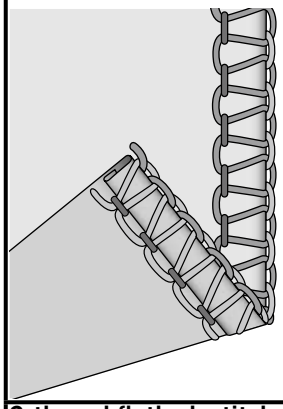	Right	6	2	3	None	No	---	4	4	0.5
3-thread flatlock stitch, wide 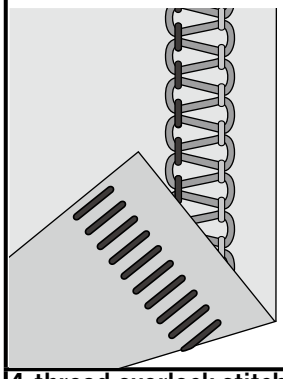	Left	5	3	3	B	No	0	---	3.5	9
4-thread overlock stitch 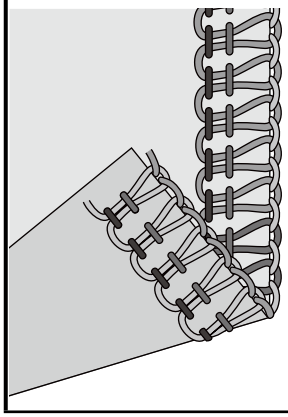	Left & Right	6	3	4	A	No	4	4	4	4

www.sewshop.eu

Three-thread overlock with one needle

By threading the LEFT needle only a width of 7mm will be produced and by threading the RIGHT needle only a width of 3.8mm will be produced.

Converting to two-thread use

To convert to two thread use, first open the front cover and working table and raise needle to its highest point by turning hand wheel towards you. When 2-thread sewing, only one needle is used, so place a needle in either the right or left position, depending on the stitch you are planning to sew.

Place the unused needle back into the needle pack or into the accessory bag.

1. Pull out the converter as shown in Fig.1.
2. Attach the two-thread converter onto the upper looper as shown in Fig. 2, Fig.3.
3. When not using converter, insert it into its holder securly, as illustrated in Fig. 4.

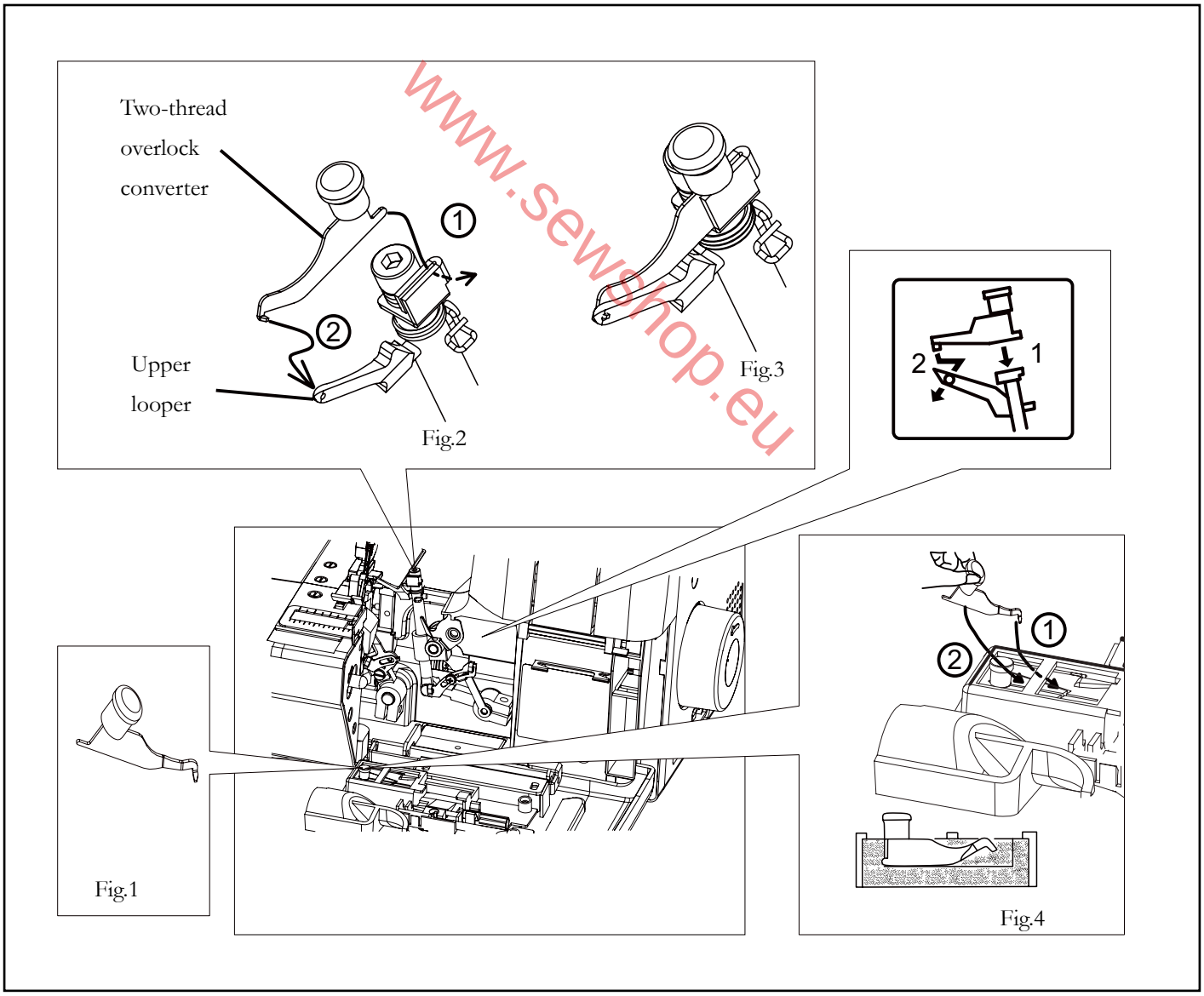

www.sewshop.eu

Narrow and rolled hem, picot stitch

Narrow and rolled edges are ideal for use on fine fabrics such as organza, lightweight cotton, silk, etc.

Also, the picot stitch can be used for edge finishing on fine fabrics such as sheers, rayon, voile, and more.

Due to the nature of these hems, they are not suitable for heavier weight fabrics.

1. Raise the presser foot.
2. Open the front cover and working table.
3. Remove the stitch finger from the needle plate by screw driver and place it securely in the front cover, as illustrated, or in the accessory bag.
4. Set the machine according to page 19.

NOTE: After finishing, reset the stitch finger in its place. Please ensure inserting it deep as illustrated in Fig 1. After removing the stitch finger from the machine, insert it securely in its holder on machine inside cover, as illustrated in Fig. 1, or place it in the accessory bag.

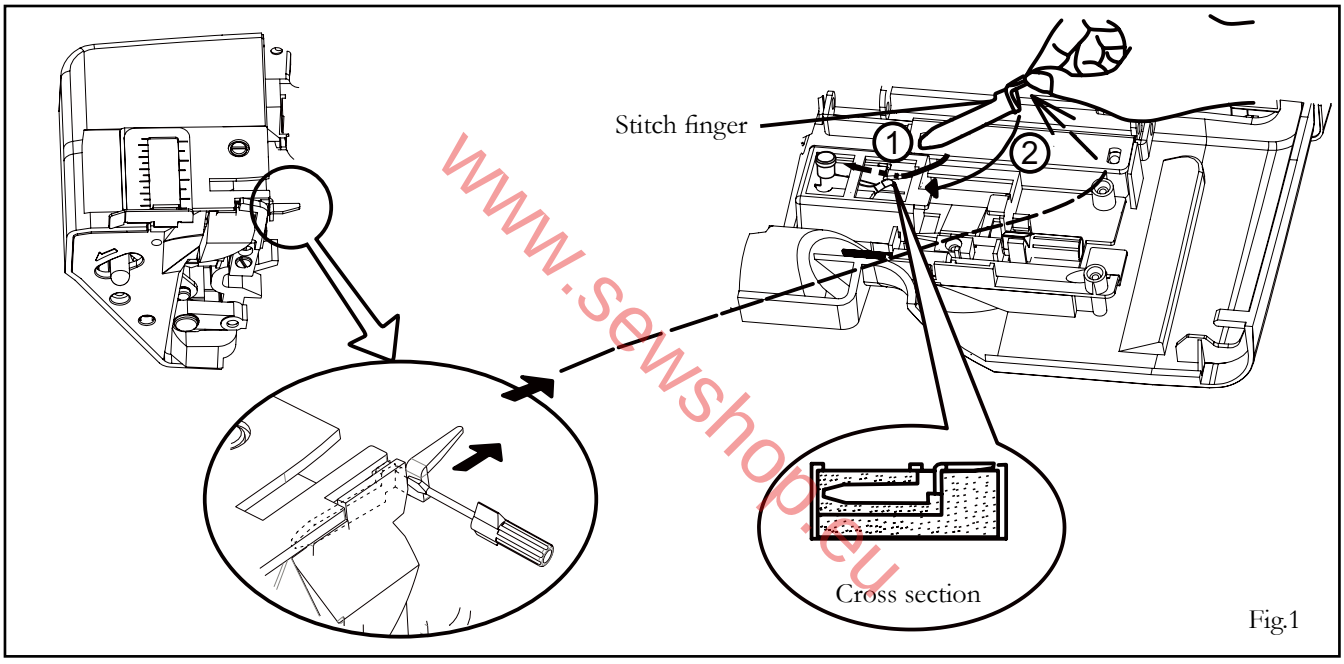

Fig.1

www.sewshop.eu

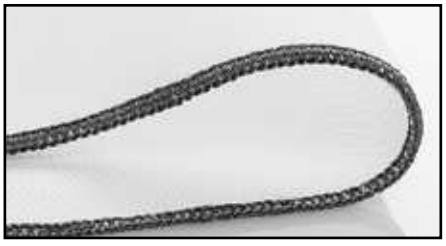
Narrow hem

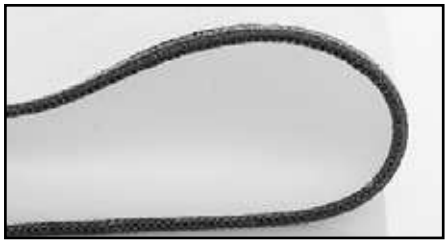
Rolled hem

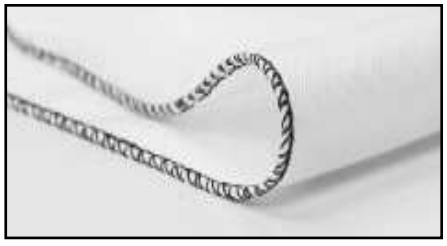
Picot stitch

Adjusting thread tensions

Turning tension dial to a higher number gives a tighter thread tension. Turning tension dial to a lower number gives a looser thread tension.

Test each thread tension on a scrap of the fabric you plan to use.

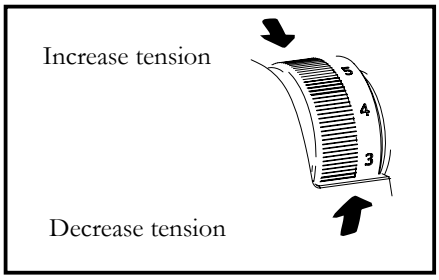

Two-thread use

Just right Fig.1

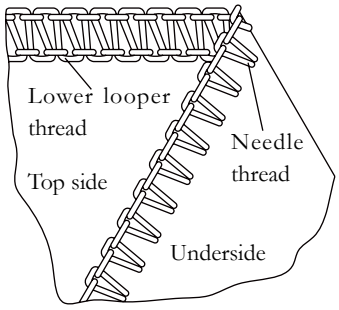

Lower looper thread pulled to underside Fig.2

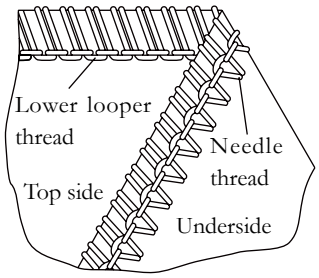

Decrease needle thread tension

Needle thread pulled to top side Fig.3

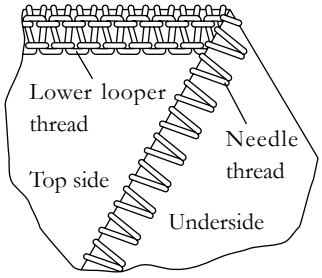

Increase needle thread tension

Four-thread use

Just right Fig.1

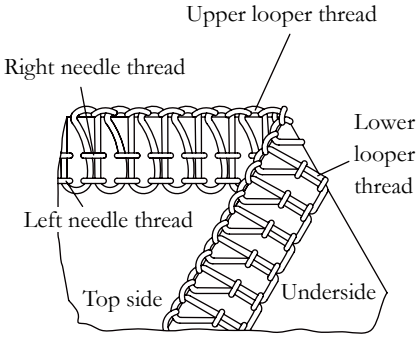

Upper looper thread pulled to top side Fig.2

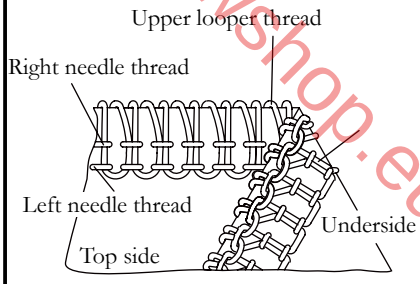

Increase Upper looper thread tension and/or decrease lower looper tension

Lower looper thread pulled to top side Fig.3

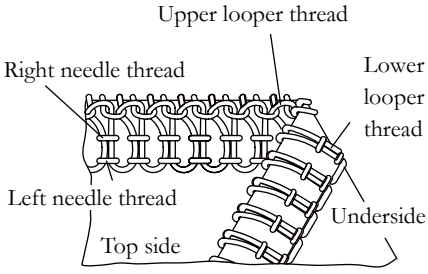

Increase lower looper thread tension and/or decrease upper looper tension

Left needle thread loose and visible on under side of fabric. Fig.4

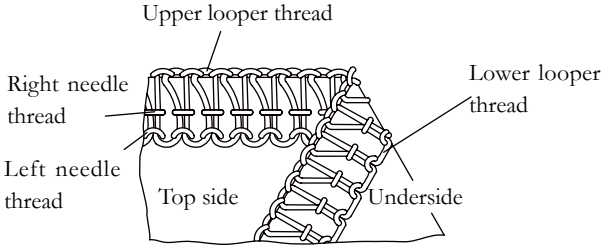

Increase left needle thread tension and/or decrease either or both looper threads.

Right needle thread loose and visible on under side of fabric. Fig.5

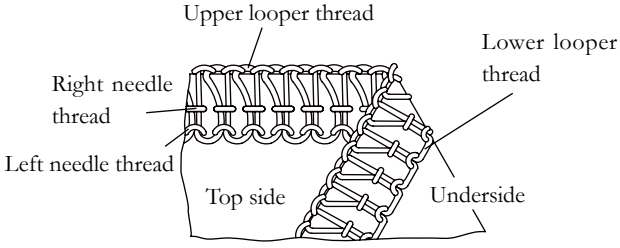

Increase right needle thread tension.

www.sewshop.eu

Adjusting stitch length

Turn the stitch length dial until the required length is indicated.

The higher the number, the longer the stitch. This dial can adjust the stitch length from 1 to 5mm.

Adjusting overedge cutting width

Overedge cutting width can be adjusted from 4 to 7mm by simply turning overedge cutting width dial according to the type of fabric.

It is set at standard width of 6mm when delivered from the factory.

Turn it towards "5" if fabric edge puckers while sewing. (Fig.1)

Turn it toward "7" if loops hang off the edge. (Fig.2)

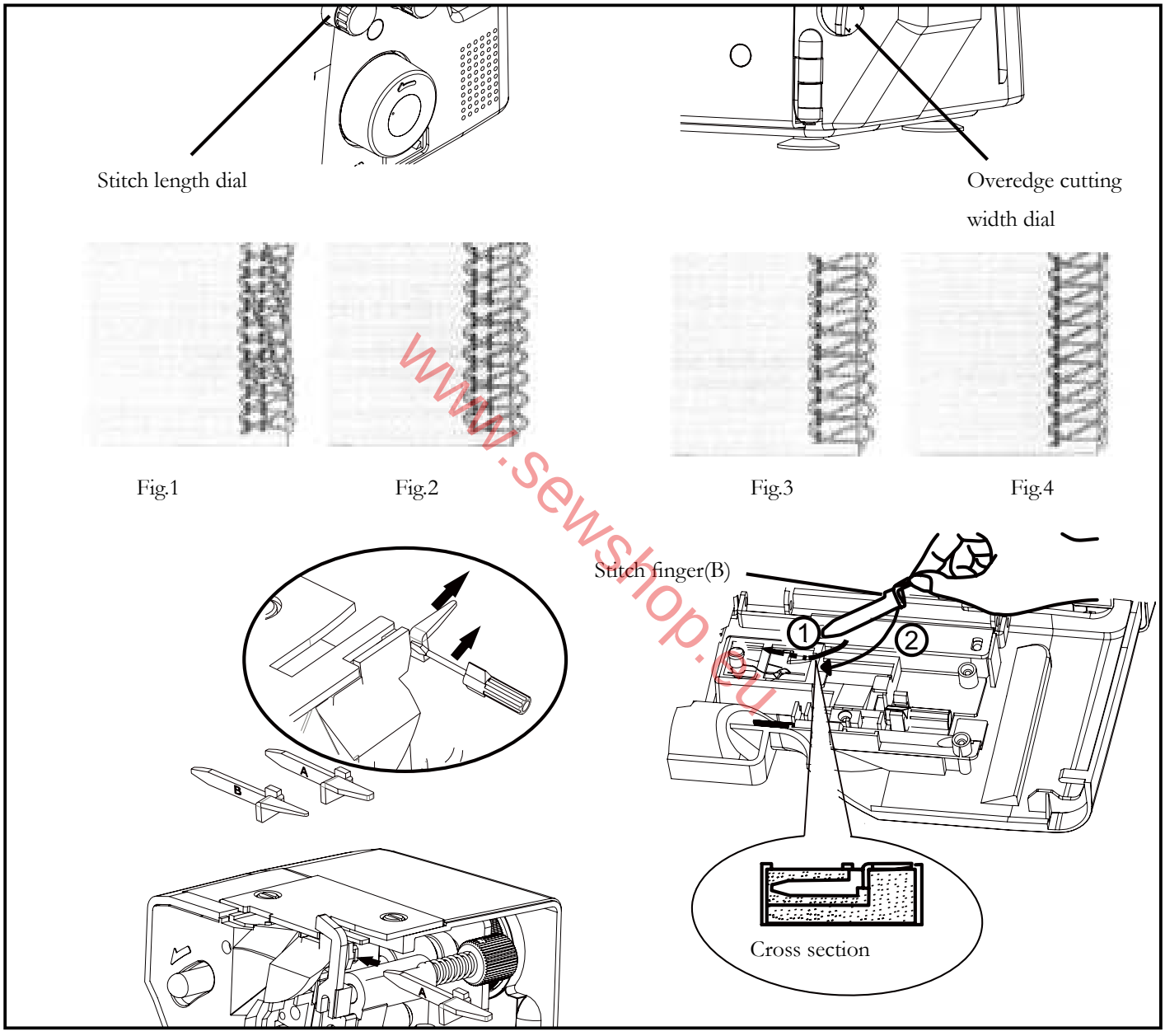

www.sewshop.eu

Stitch finger (B)

Loops may hang off the edge, when you sew with lightweight fabric using 3 threads (right needle only), and setting cutting width dial at 4-5(Fig. 3). In such a case change the stitch finger(A) to (B) to get neat stitching(Fig. 4).

Differential feed

The differential feed has two independent feed teeth, one front (A) and one rear (B).

Each row of feed teeth has an individual feed mechanism which enables the feeding of fabric at a different ratio.

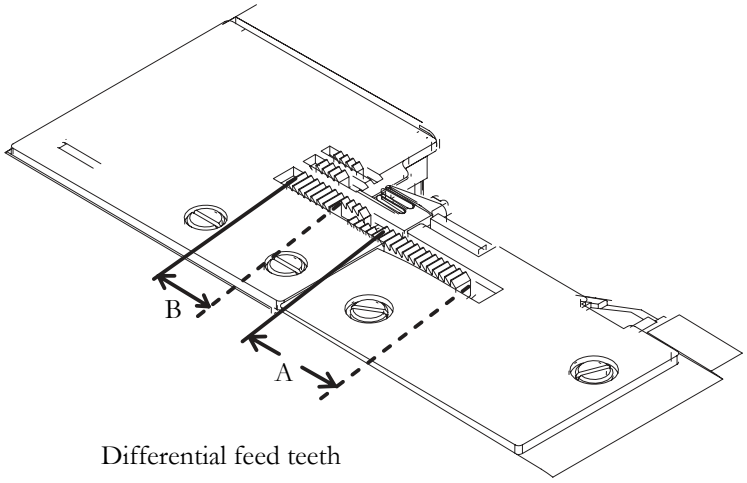

Differential feed teeth

Positive differential feed

When set for positive differential feed, the front row of feed teeth (A) makes a longer stroke than the rear row of feed teeth (B).

This has the effect of accumulating fabric under the presser foot to offset the wavering on the fabric, removing distortion.

www.sewshop.eu

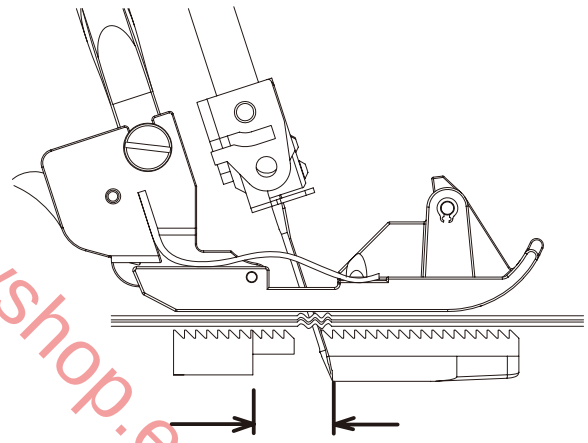

Positive differential feed

Negative differential feed

When set for negative differential feed, the front row of feed teeth (A) makes a shorter stroke than the rear row of feed teeth (B).

This has the effect of stretching fabric under the presser foot to offset the puckering on the fabric.

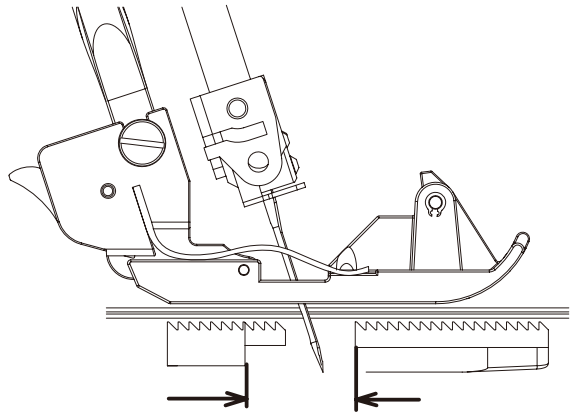

Negative differential feed

Setting differential feed

Set by simply turning the differential feed control dial in the direction desired referring to the chart below.

The adjustment can be made between 0.7 (negative effect) and 2 (positive effect). These settings give the best ratio of feeding.

For normal sewing, the dial should be set at 1.

The dial can be reset even while sewing.

EFFECT AND APPLICATION	TYPE OF FEEDING	SETTING	FEED RATIO REAR: FRONT
Waver-free seams, Gathering	Positive differential feed	1-2	
No differential feed	Neutral feed	1	
Pucker-free seams	Negative differential feed	0.7-1	

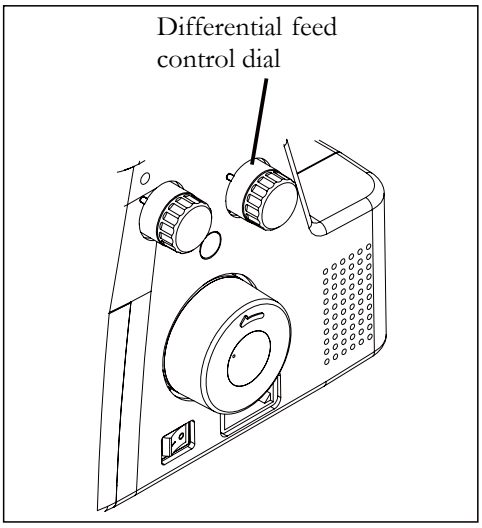

www.sewshop.eu

Presser foot pressure regulator

Presser foot pressure has been correctly set at the factory, so you do not need to adjust it for most of ordinary sewing. If adjustment is necessary, turn the presser foot pressure regulator to higher number to increase or to lower number to decrease pressure.

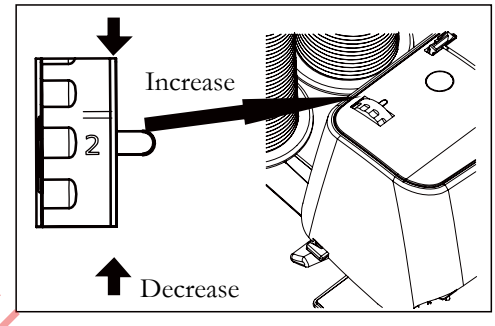

Sewing with extra heavyweight fabric or multiple layers of fabric

A wide range of fabric can be overlocked on this machine, but it is recommended to tighten screw as illustrated, when sewing with extra heavyweight fabrics or multiple layers of fabric. Open working table for adjustment.

Loosen the screw when sewing with light to normal weight fabric or turning overedge cutting width dial, or otherwise fabric may not be well cut.

The machine is set for normal weight fabrics from the factory.

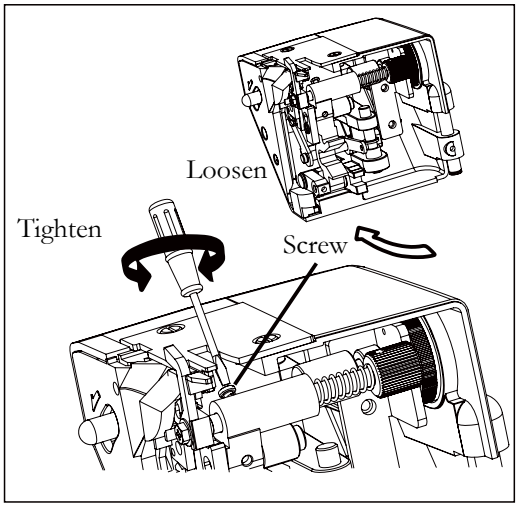

Basic techniques

1. When you reach the fabric edge, stop stitching with the needle above the fabric.
2. Raise the presser foot and gently pull on the thread chain just enough to clear the stitch finger.
3. Turn the fabric, lower the presser foot and begin stitching in the new direction. Fig. 1.

NOTE: When overlocking and trimming at the same time, cut the fabric along the new stitching line for about 3cm, before turning the fabric. Fig. 2.

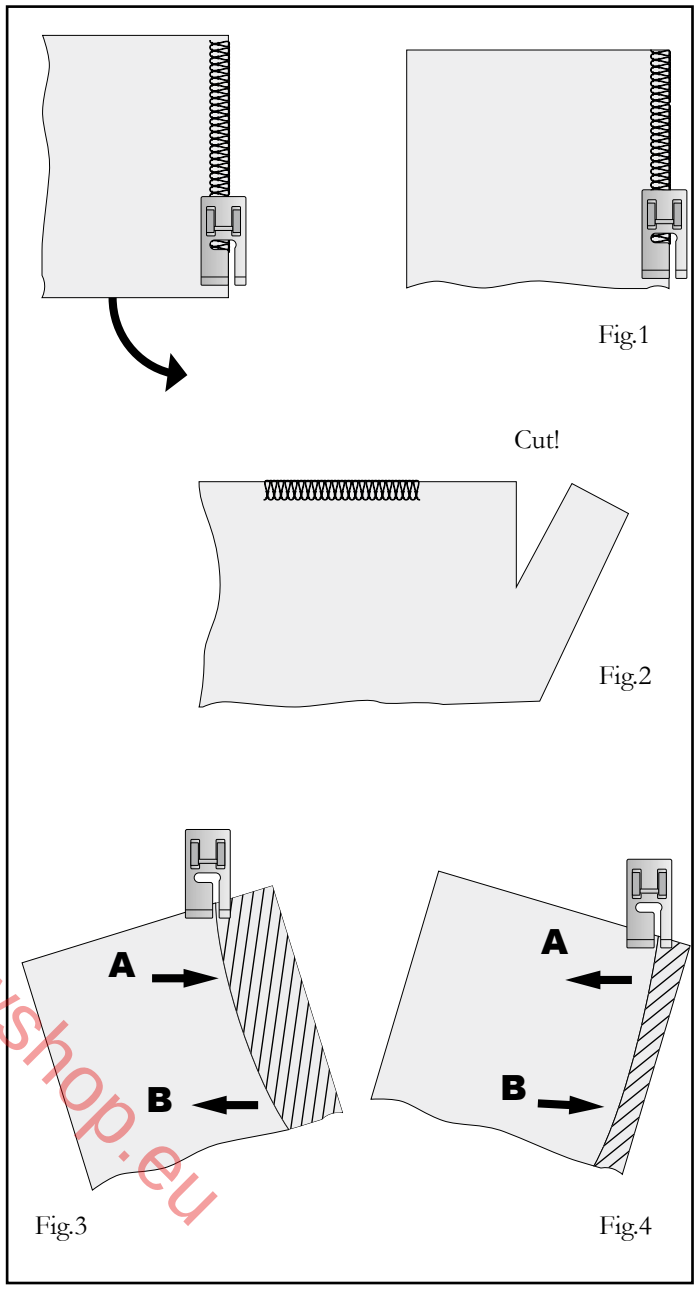

Fig.1 Fig.2 Fig.3 Fig.4

Turning curved edges

For inside curves, guide fabric gently with trimming line of the fabric under the right front of the presser foot (or a little to the left), applying pressure at point A in the direction of the arrow with your left hand, and at the same time applying a little opposite pressure at point B with your right hand. Fig.3.

For outside curves place under the presser foot in a similar manner but applying the pressure in the opposite directions. Fig. 4.

www.sewshop.eu

Removing stitches from sewn fabric

To remove stitches already sewn, snip off needle thread (s) at intervals and pull out looper threads.

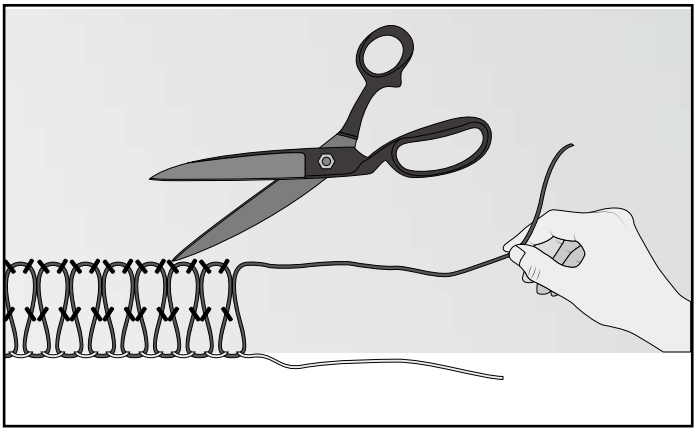

Corded overlock

Corded overlock can be used to strengthen shoulder, sleeve or side seams especially when sewing stretch garments. As a decorative feature you can use knitting yarn of contrasting colors to further enhance your garment. Your machine is equipped with a presser foot which has been designed to feed your cord or yarn to the left of the safety stitch or to the right. Follow instructions as follows:

1. Place a "filler" cord, such as a crochet cotton, gimp, wool, knitting yarn, or shirring elastic at the rear of the machine spool pin. Pass the cord through the cord guides (1) and (2) and then through the left needle thread guide (3). See Fig. 1.

2. Insert the cord through either the front or rear hole (according to the operation, see diagrams Figures 2 and 3), in the presser foot and pass it under and to the rear of the foot.

3. Place the fabric to be sewn as normal.

Start at slow speed observing if cord is feeding correctly and increase speed as desired.

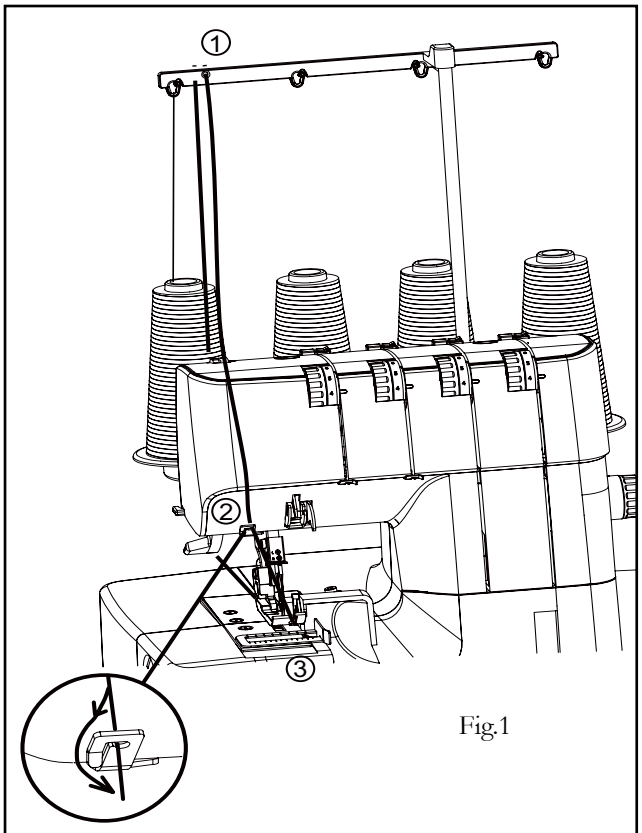

Fig.1

For joining shoulder or sleeves, pass the cord through the front hole, ensuring that it is fixed between the left and right needle threads as it is guided through the front hole. (Fig.2).

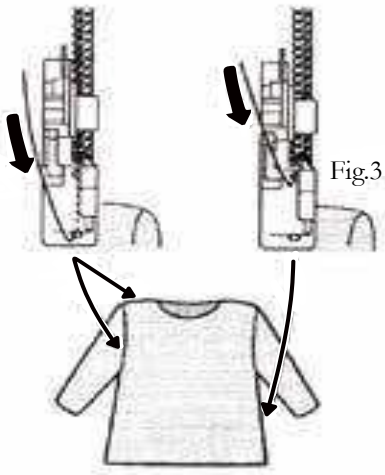
Fig.2

Fig.3

For joining side seams, pass the cord through the rear hole, ensuring it is positioned to the right needle thread. (Fig.3)

For decorative effects, you may pass contrasting colors either through the front or rear hole or if you desire, pass cord or yarn through each hole.

For making wavy hem with filler cord (Fig. 4), pass the filler cord through the rear hole and start ROLLED HEM.

This is used for the hem of skirt, etc.

Fig.4

www.sewshop.eu

Decorative effects

In addition to normal overlocking which is fully described in this instruction book, your machine can also be used for a number of decorative applications such as flatlocking, butted seams, pintucking or making lengths of decorative braid. See below.

Decorative flatlocking using two threads or using three threads (flat seam)

Fold fabric along the line to be flatlock and sew over the folded edge, making sure not to cut into the fold. Fig. A.

Unfold the fabric, pull the ends of the threads to the underside and press flat.

The final appearance can be enhanced by using buttonhole twist or embroidery thread on the lower looper.

Butted seams using two threads or using three threads (flat seam)

Place two pieces of fabric wrong sides together and overlock along the edge. Unfold and press.

By using different colored fabrics and thread a pleasing 'patch-work' effect can be achieved.

Pintucking using three threads

Fold fabric along a line to be pintucked and overlock sew along the folded edge, making sure not to cut into the folded edge of the fabric. (See page 25). Pull ends of threads to underside and press.

Making decorative braid using three threads

Overlock over a cord braid, holding it carefully with both hands, making sure not to cut the edge. (See page 25).

NOTE: Reduce the tension when using thicker, decorative threads.

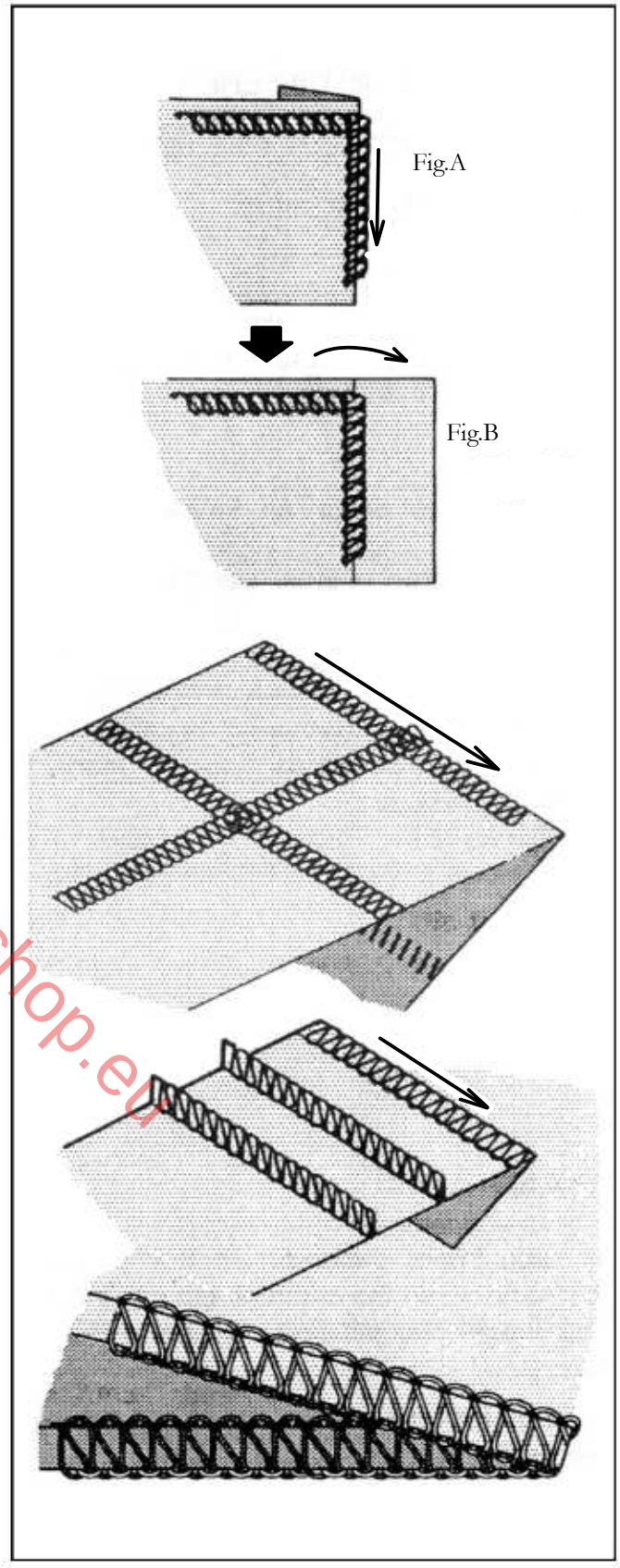

www.sewshop.eu

Differential feed applications

Please refer to pages 26-27, Differential feed.

Differential feed is designed to minimize puckering and wavering. It is also very effective for gathering.

1. Puckering

Puckering tends to occur on woven or sheer fabrics.

To obtain pucker-free seams, set the differential feed control dial at less than 1.

2. Wavering

Wavering tends to occur on knitted or stretchable fabrics.

To obtain waver-free seams, set the differential feed control dial at more than 1.

3. Gathering

Differential feed makes gathering easier on lightweight fabric. Use it on waistlines, sleeve heads, sleeve bottoms and ruffles, etc.

Set the differential feed control dial between 1.5 and 2 to obtain the best gathering effect for your use.

It can also be helpful to increase tension on the needle thread(s) and lengthen the stitch length setting.

Important

The exact adjustment depends on the thickness and elasticity of fabric. Even the stitch length can influence the setting. The longer the stitches, the more the fabric is contracted.

Always do a test run with a piece of actual fabrics you use and find the best settings.

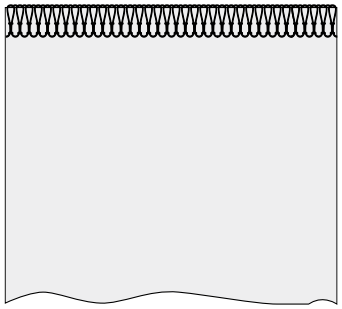

Pucker or waver-free seams

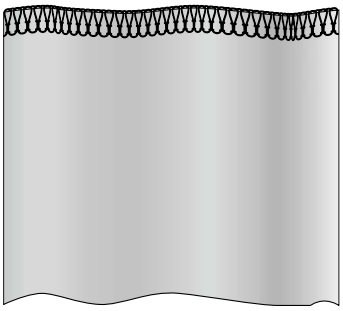

Puckering

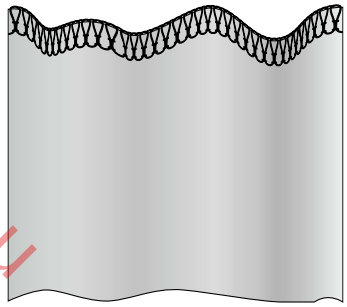

Wavering

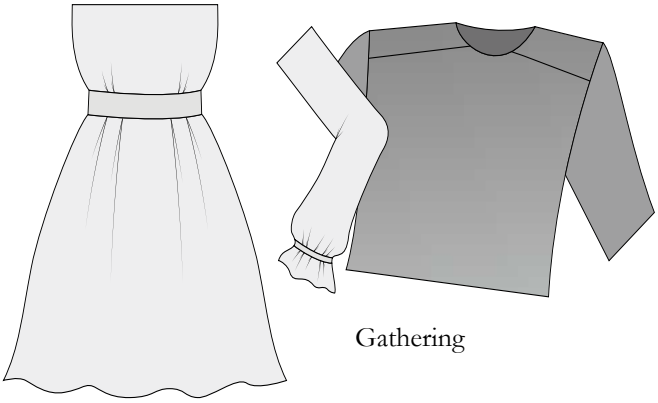

Gathering

www.sewshop.eu

3. CARING FOR YOUR MACHINE

Replacing the moving cutter

Replace the moving cutter as follows, if it becomes blunt. A spare cutter will be found in your accessories.

NOTE: You should not need to replace fixed cutter, which is made of special hard alloy material.

FIRST REMOVE THE POWER PLUG FROM THE SUPPLY SOCKET-OUTLET.

1. Loosen screw and take out moving cutter.
2. Close the working table. Lower cutter driving arm to its lowest position by turning the hand wheel towards you by hand. In this position, set replacement cutter in position and secure it with screw, ENSURING THAT THE EDGE OF THE MOVING CUTTER IS APPROXIMATELY 0.5MM BELOW THE SURFACE OF THE FIXED CUTTER.

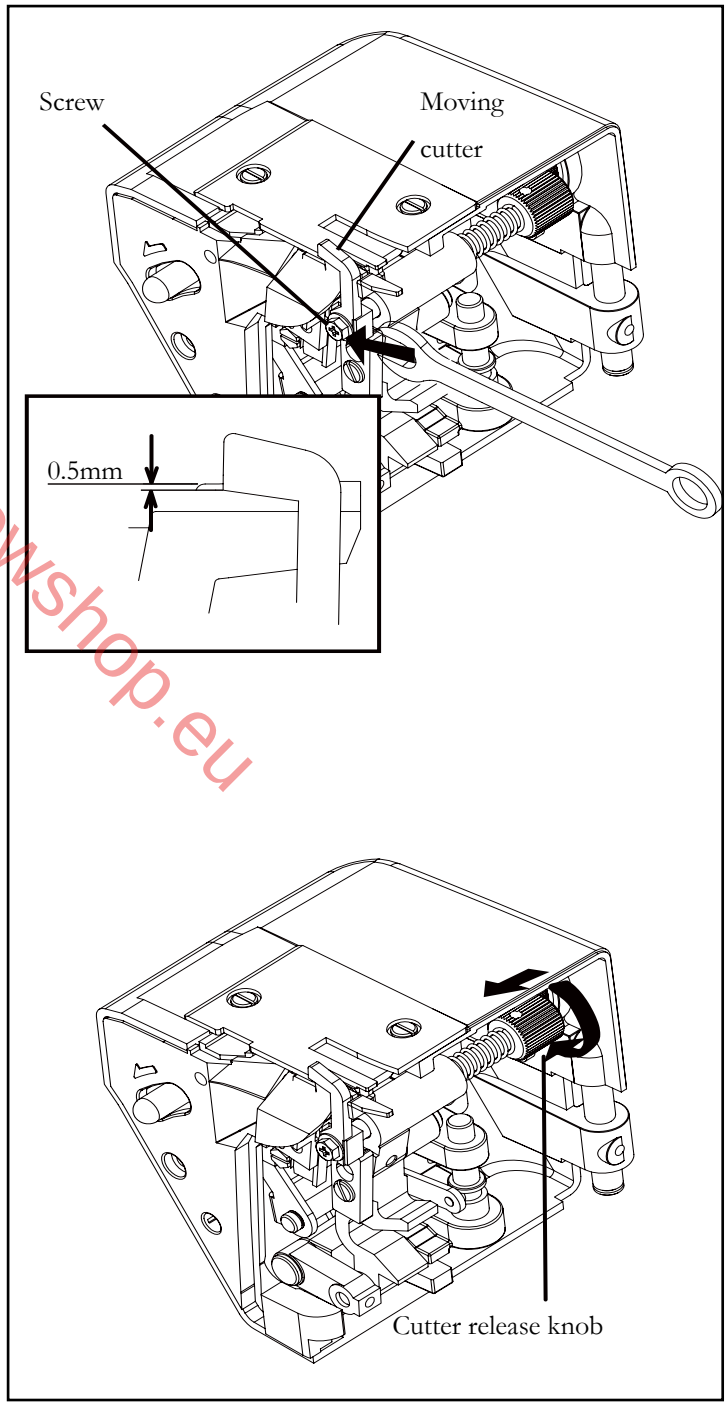

www.sewshop.eu

Disengaging moving cutter

If you want to sew without cutting, open the working table and disengage the moving cutter by pushing the cutter release knob to the left and turning it towards you as illustrated. Ensure that fabric edge is not wider than overedge width selected or upper looper and needle can be damaged.

Cleaning and oiling

To keep the machine running smoothly, keep it clean and lubricated at all times.

FIRST DISCONNECT MACHINE FROM POWER SUPPLY BY REMOVING PLUG FROM SOCKET-OUTLET.

1. Open the front cover and working table. Using the brush provided, remove dust and lint that have accumulated.
2. Apply a few drops of oil to the points indicated by arrows.

ALWAYS USE A GOOD QUALITY SEWING MACHINE OIL.

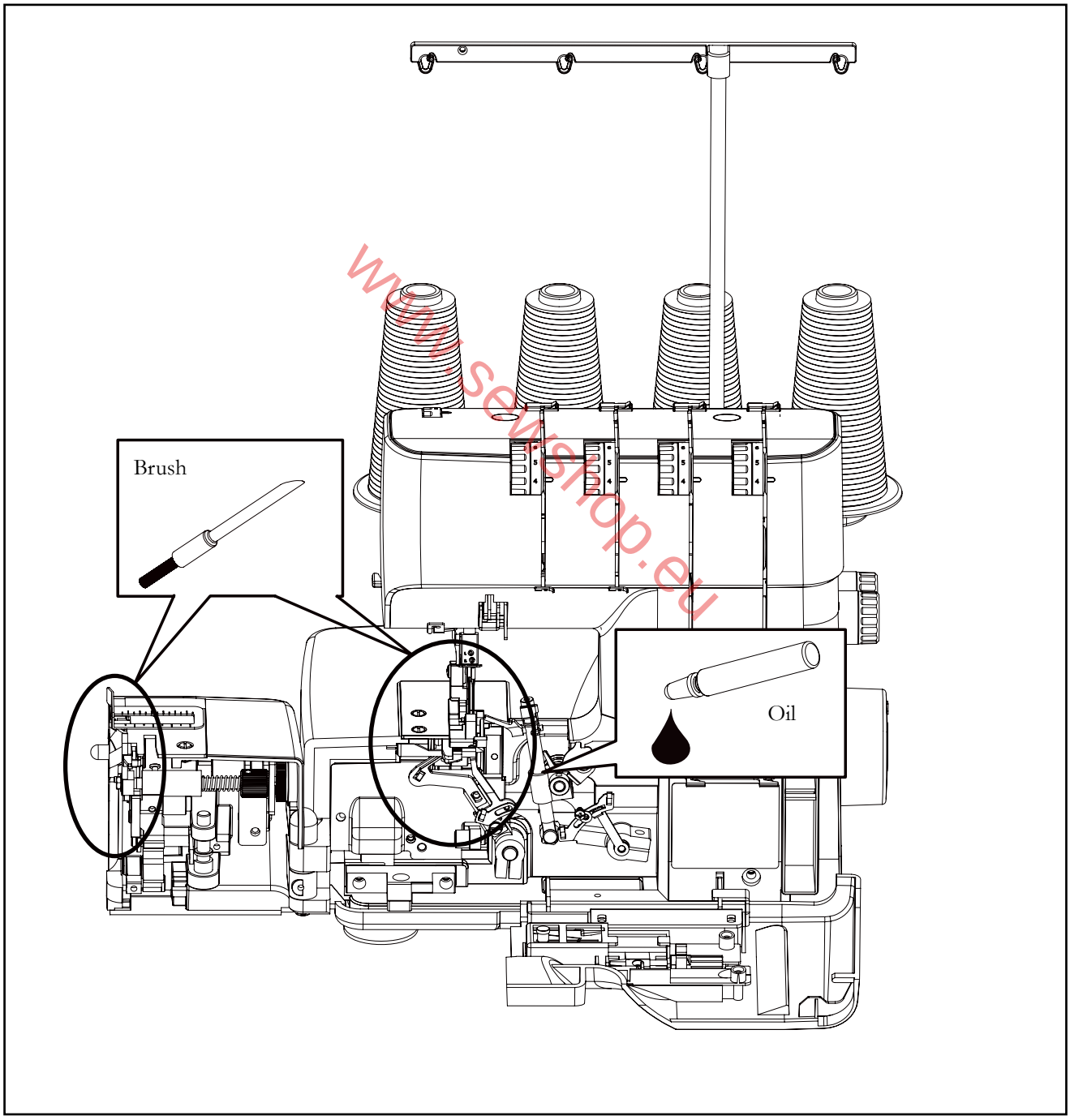

www.sewshop.eu

4. CHECKING PERFORMANCE PROBLEMS

PROBLEM	PROBABLE CAUSE	CORRECTION
Irregular stitches	1. Incorrect thread tension(s). 2. Incorrect size needle. 3. Improper threading. 4. Pulling fabric. 5. Loose presser foot.	1. Reset thread tension(s). 2. Choose correct size needle for thread and fabric. 3. Re-thread machine. 4. Do not pull fabric; guide it gently. 5. Reset presser foot.
Breaking needle	1. Pulling fabric. 2. Incorrect size needle. 3. Incorrect setting of needle. 4. Loose presser foot.	1. Do not pull fabric; guide it gently. 2. Choose correct size needle for thread and fabric. 3. Reset needle. 4. Reset presser foot.
Puckering	1. Incorrect thread tension(s). 2. Bent or blunt needle. 3. Differential feed is set incorrectly.	1. Reset thread tension(s). 2. Insert new needle. 3. Set it at less than 1.
Wavering	Differential feed is set incorrectly.	Set it at 1 or at more than 1.
Skipping Stitches	1. Improper threading. 2. Incorrect size needle. 3. Bent or blunt needle. 4. Incorrect setting of needle	1. Reset thread machine. 2. Choose correct size needle for thread and fabric. 3. Insert new needle. 4. Reset needle.
Breaking Threads	1. Improper threading. 2. Bent needle. 3. Thread tension(s) too tight. 4. Incorrect setting of needle. 5. Thread spool tangled. 6. Thread guide pole not extended.	1. Re-thread machine. 2. Insert new needle. 3. Reset thread tension(s). 4. Reset needle. 5. Reset spool properly. 6. Fully extend guide pole.

www.sewshop.eu

www.sewshop.eu

www.sewshop.eu

www.sewshop.eu

www.pfaff.com

www.sewshop.eu

4710945-26A © 2021 KSIN Luxembourg II, S.a.r.l. All rights reserved.