PFAFF

Perfection starts here.™

quilt ambition™ 630
ambition™ 620

User's Guide

This household sewing machine is designed to comply with IEC/EN 60335-2-28 and UL1594.

IMPORTANT SAFETY INSTRUCTIONS

When using an electrical appliance, basic safety precautions should always be followed, including the following:

Read all instructions before using this household sewing machine. Keep the instructions at a suitable place close to the machine. Make sure to hand them over if the machine is given to a third party.

DANGER –TO REDUCE THE RISK OF ELECTRIC SHOCK:

- A sewing machine should never be left unattended when plugged in. The electrical socket, to which the machine is plugged in should be easily accessible. Always unplug this sewing machine from the electric outlet immediately after using and before cleaning, removing covers, lubricating or when making any other user servicing adjustments mentioned in the instruction manual.

WARNING –TO REDUCE THE RISK OF BURNS, FIRE, ELECTRIC SHOCK, OR INJURY TO PERSON:

- Do not allow to be used as a toy. Close attention is necessary when this sewing machine is used by or near children.
- Use this sewing machine only for its intended use as described in this manual. Use only attachments recommended by the manufacturer as contained in this manual.
- Never operate this sewing machine if it has a damaged cord or plug, if it is not working properly, if it has been dropped or damaged, or dropped into water. Return the sewing machine to the nearest authorized dealer or service center for examination, repair, electrical or mechanical adjustment.
- Never operate the sewing machine with any air openings blocked. Keep ventilation openings of the sewing machine and foot control free from the accumulation of lint, dust, and loose cloth.
- Keep fingers away from all moving parts. Special care is required around the sewing machine needle.
- Always use the proper needle plate. The wrong plate can cause the needle to break.
- Do not use bent needles.
- Do not pull or push fabric while stitching. It may deflect the needle causing it to break.
- Wear safety glasses.
- Switch the sewing machine off (“0”) when making any adjustment in the needle area, such as threading needle, changing needle, threading bobbin, or changing presser foot, etc.
- Never drop or insert any object into any opening.
- Do not use outdoors.
- Do not operate where aerosol (spray) products are being used or where oxygen is being administrated.
- To disconnect, turn all controls to the off (“0”) position, then remove plug from outlet.
- Do not unplug by pulling on cord. To unplug, grasp the plug, not the cord.
- The foot control is used to operate the machine. Avoid placing other objects on the foot control.
- Do not use the machine if it is wet.

- If the LED lamp is damaged or broken, it must be replaced by the manufacturer or its service agent or a similarly qualified person, in order to avoid a hazard.
- If the cord connected with the foot control is damaged, it must be replaced by the manufacturer or its service agent or a similarly qualified person, in order to avoid a hazard.
- This sewing machine is provided with double insulation. Use only identical replacement parts. See instructions for Servicing of Double-Insulated Appliances.

SAVE THESE INSTRUCTIONS

FOR CENELEC COUNTRIES ONLY:
This appliance can be used by children aged from 8 years and above and persons with reduced physical, sensory or mental capabilities or lack of experience and knowledge if they have been given supervision or instruction concerning use of the appliance in a safe way and understand the hazards involved. Children shall not play with the appliance. Cleaning and user maintenance shall not be made by children without supervision.

The noise level under normal operating conditions is less than 70 dB.

The machine must only be used with foot control of type C-9000 manufactured by CHIEN HUNG TAIWAN Ltd.

FOR NON CENELEC COUNTRIES:
This sewing machine is not intended for use by persons (including children) with reduced physical, sensory or mental capabilities, or lack of experience and knowledge, unless they have been given supervision or instruction concerning use of the sewing machine by a person responsible for their safety. Children should be supervised to ensure that they do not play with the sewing machine.

The noise level under normal operating conditions is less than 70 dB.

The machine must only be used with foot control of type C-9000 manufactured by CHIEN HUNG TAIWAN Ltd.

SERVICING OF DOUBLE INSULATED PRODUCTS

In a double-insulated product, two systems of insulation are provided instead of grounding. No ground means is provided on a double-insulated product, nor should a means for grounding be added to the product. Servicing of a double-insulated product requires extreme care and knowledge of the system and should be done only by qualified service personnel. Replacement parts for a double-insulated product must be identical to those parts in the product. A double-insulated product is marked with the words ‘DOUBLE INSULATION’ or ‘DOUBLE INSULATED’.

TABLE OF CONTENTS

1 Introduction 6
Machine Overview 6
Front 6
Top Parts 7
Rear Side 7
Accessory Tray 8
Accessories 8
Included Accessories 8
Presser Feet 9
Stitch Overview 10
Utility Stitches 10
Quilt Stitches 13
Needle Art Stitches 13
Satin Stitches 13
Decorative Stitches 14
Optional Feet Stitches 15
Alphabets 15
Block 15
Cyrillic 15

2 Preparations 16
Unpacking 16
Connect the Power Cord and Foot Control 17
Pack Away After Sewing 17
LED Lights 17
Free Arm 18
Mounting Machine in Sewing Cabinet 18
Thread Cutter 18
Spool Pins 18
Horizontal Position 18
Vertical Position 19
Auxiliary Spool Pin 19
Threading the Machine 20
Needle Threader 20
Threading for Twin Needle 21
Bobbin Winding 22
Winding From Horizontal Position 22
Winding Through the Needle 23
Inserting the Bobbin 23
IDT™ System (Integrated Dual Feed) 24
Engaging the IDT™ System 24
Disengaging the IDT™ System 24
Needles 25
Universal Needle 25
Stretch Needle 25
Denim Needle 25
Wing Needle 25
Changing the Needle 26
Lowering Feed Dogs 26
Presser Foot Pressure 26
Presser Foot Lift 26
Changing the Presser Foot 27
Remove Presser Foot 27
Attach Presser Foot 27

3 Operating your **ambition™ 620** 28
Buttons and Indicators 28
Graphic Display 28
Needle Stop Up/Down Button with Indicator 28
Tie-off Button with Indicator 28
Thread Snips Button with Indicator 29
Start/Stop Button 29
Reverse Button with Indicator 29
Stitch Width/Stitch Positioning Buttons 29
Cursor Buttons 29
Stitch Length/Stitch Density Buttons 29
Direct Selection Buttons 29
Load Button 29
Save Personal Stitch or Sequence button 29
Delete Button 29
Mirror Side to Side Button 29
Mirror End to End Button 29
Alt Button 29
Info Button 29
Wheel Buttons 29
OK Button 29
Speed Control Lever 29
Settings Menu 30
Thread Tension 30
Twin Needle 30
Stitch Width Safety 31
Language 31
Audible Alarm 31
Contrast 31
Software Version 31
Sewing Mode 32
Select a Stitch 32
Stitch Adjustments 34
Personal Stitch 36
Sequencing 36
Create a Sequence 37
Using the Alphabet 37
Create a Text Sequence 37
Manage Your Sequences 39
Sewing a sequence 39
Sequencing Pop-Ups 40

4 Operating your **quilt ambition™ 630** 41
Buttons and Indicators 41
Graphic Display 41
Needle Stop Up/Down Button with Indicator 41
Tie-off Button with Indicator 41
Thread Snips Button with Indicator 41
Start/Stop Button 42
Reverse Button with Indicator 42
Speed Control Lever 42
Settings Menu 42
Thread Tension 42

Twin Needle 42
Stitch Width Safety 43
Language 43
Audible Alarm 43
Calibrate Touch Screen 43
Sewing Mode 44
Select a Stitch 45
Stitch Adjustments 45
Personal Stitch 47
Sequencing 47
Create a Sequence 48
Using the Alphabet 48
Create a Text Sequence 48
Manage Your Sequences 50
Sewing a sequence 50
Sequencing Pop-Ups 51

5 Sewing 52
Sewing Techniques 52
Three-Step Zigzag Stitch 52
Buttonholes 52
Sew On a Button 54
Darning 55
Sewing Hems in Heavy Fabric 55
Handlook Quilting 56
Free-Motion 56
Free-Motion Stippling 57
Blindhem Stitch 57
Sewing in Zippers 58
Sewing Pop-Ups 58

6 Maintenance 60
Cleaning the Machine 60
Cleaning the Bobbin Area 60
Cleaning Under the Bobbin Area 60
Replacing the Needle Plate 61
Troubleshooting 61
Technical specification 63

Index 64

1 Introduction

Machine Overview

Front

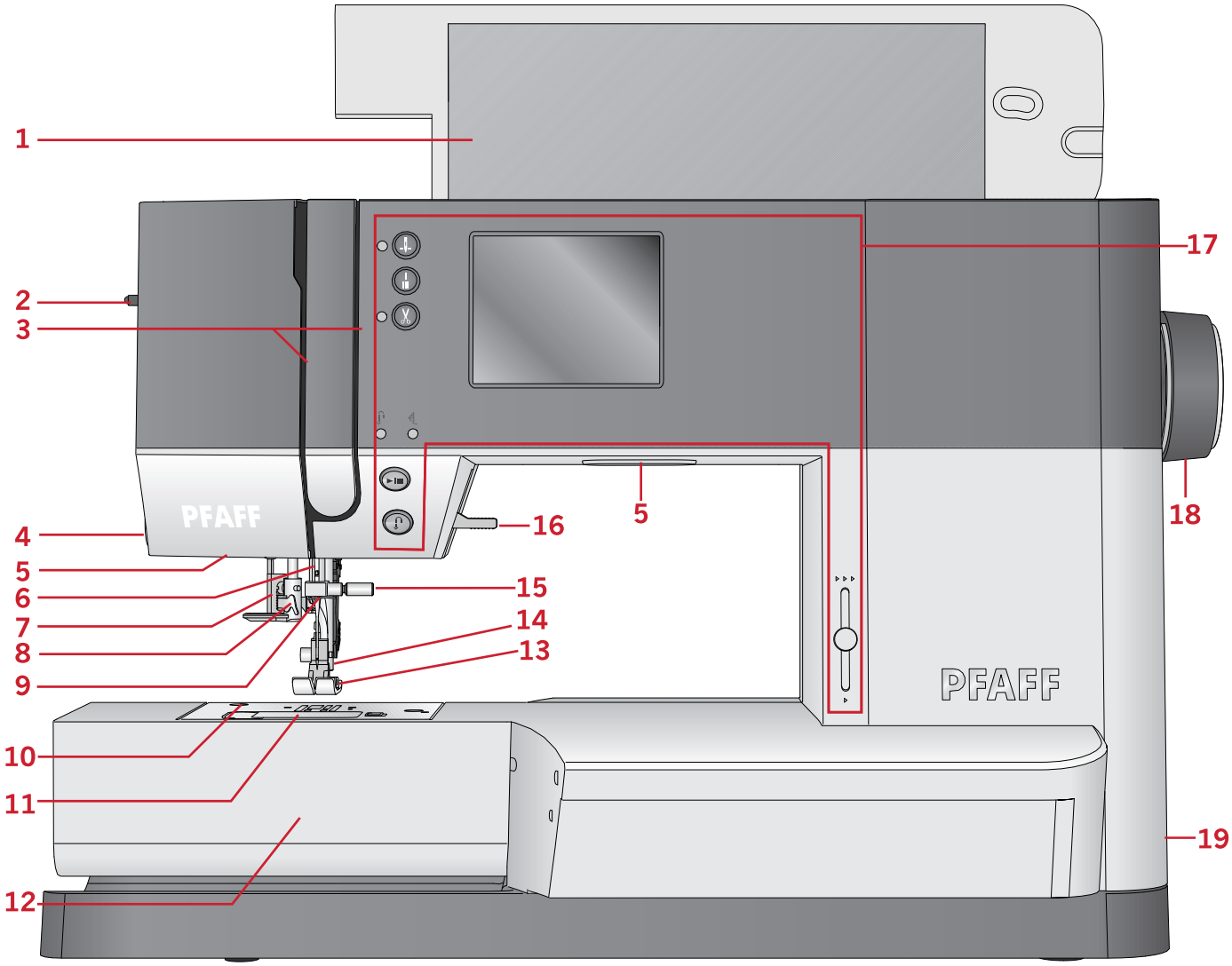

1. Lid with stitch overview
2. Presser foot pressure dial
3. Threading slots
4. Thread cutter
5. LED lights
6. Needle bar
7. Buttonhole lever
8. Built-in needle threader
9. Needle thread guide
10. Needle plate
11. Bobbin cover
12. Free arm
13. Presser foot
14. Presser foot bar and presser foot holder
15. Needle screw
16. Presser foot lift
17. Buttons and graphic display
18. Hand wheel
19. Main switch, connectors for power cord and foot control

Top Parts

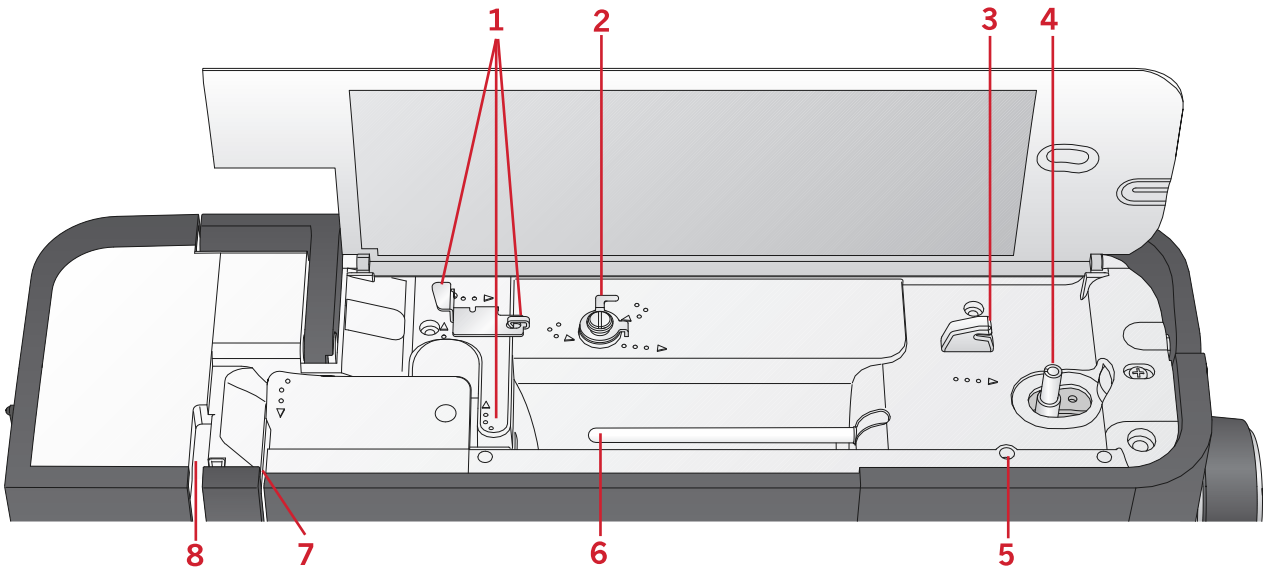

1. Thread guides
2. Bobbin winder thread guide and tension disc
3. Bobbin thread cutter
4. Bobbin winder lever and bobbin spindle
5. Hole for auxiliary spool pin
6. Spool pin
7. Thread tension discs
8. Take-up lever

Rear Side

1. Handle
2. Presser foot lift
3. IDT™ system
4. Slide for lowering the feed dogs

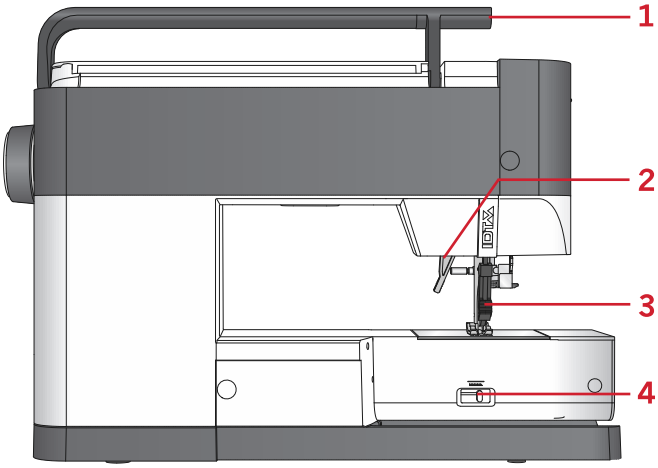

Accessory Tray

Store the accessories in the tray so they are easily accessible.

1. Space for accessories
2. Hook

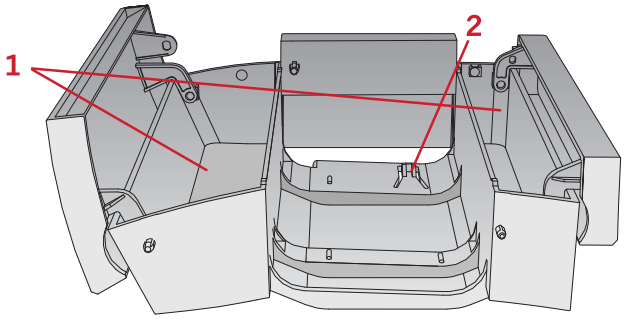

Accessories

Included Accessories

1. Thread net
2. Edge guide
3. Felt pad (2)
4. Screwdriver
5. Auxiliary spool pin
6. Seam ripper
7. Brush. Use the sharp edge of the brush to clean the area around the feed dogs.
8. Bobbins (5, one is on the machine)
9. Screwdriver for needle plate
10. Spool cap, small
11. Spool cap, large
12. Multi-purpose tool

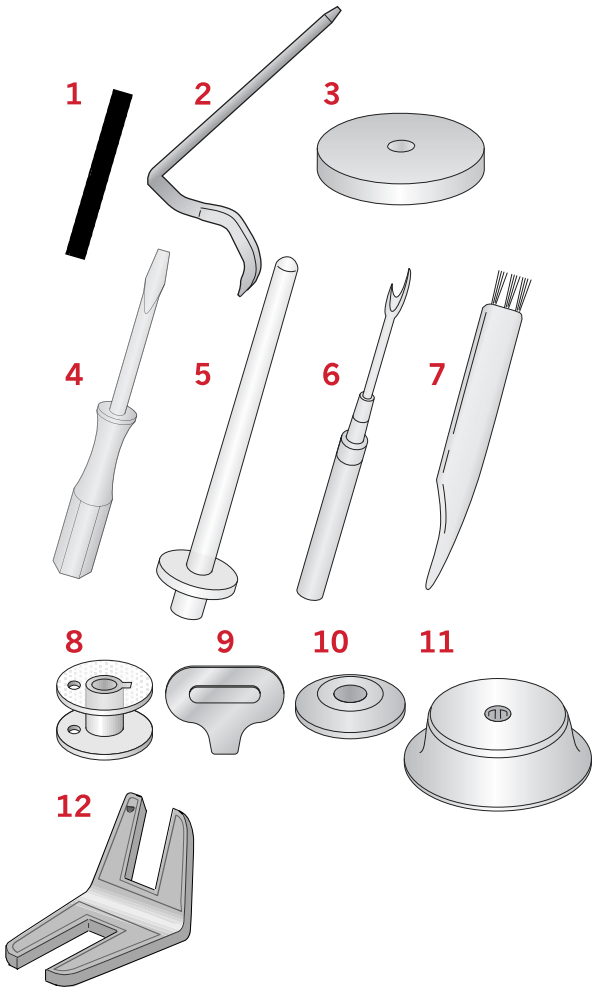

Included Accessories not in Picture

- Foot control
- Power cord
- Needles
- Hard cover

Presser Feet

OA -Standard Presser Foot for IDT™ System
(attached on the machine upon delivery)

This foot is used mainly for straight stitching and zigzag stitching with a stitch length longer than 1.0 mm.

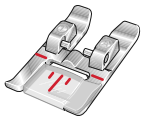

1A - Fancy Stitch Foot for IDT™ System
This foot is used for decorative stitches. The groove on the underside of the foot is designed to flow smoothly over the stitches.

2A - Fancy Stitch Foot
When sewing decorative stitches or short zigzag stitches and other utility stitches with less than 1.0 mm stitch length, use this foot. The groove on the underside of the foot is designed to flow smoothly over the stitches.

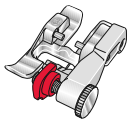

3 – Blindhem Foot for IDT™ System
This foot is used for blindhem stitches. The toe on the foot guides the fabric. The red guide on the foot is designed to ride along the fold of the hem edge.

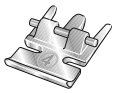

4 – Zipper Foot for IDT™ System
This foot can be snapped on either the right or the left of the needle, making it easy to sew close to both sides of the zipper teeth. Move the needle position to the right or left to sew closer to zipper teeth.

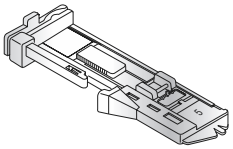

5 – One Step Buttonhole Foot
This foot has a space in the back for a button used to set the size of the buttonhole. The machine will sew a buttonhole to fit that button size. Used to sew buttonholes up to 25 mm.

6 – Embroidery/Free-Motion Foot (630)
This foot is used for free-motion sewing. This foot can also be used for darning.

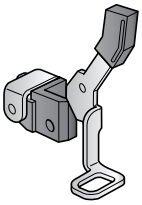

1/4” quilting foot with IDT™ System (630)
This foot is perfect for piecing. The clearance between the needle and the outer edge of the toe is 1/4” (6.3 mm) and between the needle and the inner edge of the toe is 1/8” (3.15 mm).

Stitch Overview

Utility Stitches

Stitch	№		Name	Description
	620	630		
	1	1	Straight stitch	For seaming and topstitching. Select from 29 different needle positions.
	2	2	Stretch triple straight stitch	Reinforced seam. Topstitching.
	3	3	Straight stitch reverse	Sew continuous reverse.
	–	4	Straight basting stitch	Single stitch used for basting. You determine the length of stitch manually.
	4	5	Zigzag stitch	Reinforce seams, clean finish, stretch sewing, lace insertion.
	5	6	Zigzag stitch, right or left needle position	Reinforce seams, clean finish, stretch sewing.
	6	7	Z-zigzag stitch	Appliqué, couching, eyelets.
	7	8	Stretch triple zigzag stitch	Elastic stitch for decorative hems or topstitching.
	8	9	Three-step zigzag stitch	Sewing elastic, darning, patching.
	9	10	Elastic stitch	Sewing elastic, darning, patching.
	–	11	Triple stretch stitch	Sewing elastic, darning, patching and decorative sewing.
	10	12	Honeycomb stitch	Decorative stitch for stretch fabrics and hems. Also used with elastic thread in the bobbin.
	11	13	Bridging stitch	Joining fabrics and quilt batting, decorative stitch for quilting, hemstitching.
	12	14	Foundation elastic stitch	Joining stitch for undergarments, terry cloth, leather, bulky fabrics where overlapping the seams.
	13	15	Crosshem stitch	Elastic decorative hem for stretch fabrics.
	14	16	Blindhem stitch	Sewing blindhems on woven fabrics.
	15	17	Elastic blindhem stitch	Sewing blindhems on stretch fabrics.
	16	18	Stretch tricot stitch	Sewing seams on stretch fabrics.

Stitch	№		Name	Description
	620	630		
	17	19	Closed overlock	Seam and overcast stretch fabrics in one step.
	–	20	Closed overlock	Seam and overcast stretch fabrics in one step.
	18	21	Closed overlock	Seam and overcast in one step with reinforced edge.
	–	22	Elastic overcast	Seam and overcast stretch fabrics in one step.
	–	23	Elastic overcast	Seam and overcast stretch fabrics in one step.
	19	24	Overlock	Seam and overcast in one step, patch, hem.
	20	25	Closed overlock	Seam and overcast in one step, patch, hem.
	–	26	Stretch knit overlock	Seam and overcast stretch fabrics in one step.
	–	27	Reinforced overlock	Seam and overcast stretch fabrics in one step.
	–	28	Finishing edge overlock	Seam and overcast stretch fabrics in one step.
	–	29	Mock cover hem	Create the look of a serger coverhem on stretch fabrics.
	–	30	Overlock blindhem	Create decorative overlock blindhem for woven fabrics.
	21	31	Closed overlock blind hem	Create decorative overlock blindhem for stretch fabrics.
	22	32	Linen buttonhole	Buttonhole for blouses, shirts and linen.
	23	33	Standard buttonhole	Basic buttonhole for blouses, shirts and jackets. Also for pillow cases.
	24	34	Rounded buttonhole with lengthwise tack	Buttonhole for garments.
	25	35	Eyelet buttonhole with pointed tack	Tailors buttonhole or decorative buttonhole.
	26	36	Eyelet buttonhole with lengthwise tack	Tailors buttonhole for jackets and trousers.
	27	37	Rounded buttonhole	Buttonhole for light garments or jackets.
	28	38	Stretch buttonhole	Buttonhole for stretch fabrics.
	29	39	Button sewing	Sew on buttons or tacking.
	30	40	Eyelet	Heirloom sewing decorative trim.

Stitch	№		Name	Description
	620	630		
	31	41	Programmable darning stitch	Darning holes or damaged fabric.
	32	42	Programmable reinforced darning stitch	Reinforced darning holes or damaged fabric.
	33	43	Bartack	Automatically reinforce seams and pockets.
	34	44	Denim bartack	Automatically reinforce seams and pockets decoratively.
	–	45	Decorative bartack	Automatically reinforce seams and pockets decoratively.

Quilt Stitches

620	35	–	36	37	38	–	–	39	–	40	–	41	42	43
630	46	47	48	49	50	51	52	53	54	55	56	57	58	59

620	44	45	–	46	47	48	–	49	–	–	50	51	52	–
630	60	61	62	63	64	65	66	67	68	69	70	71	72	73

620	53	54	55	–	56	57	58	59	60	61	–	–	–	–
630	74	75	76	77	78	79	80	81	82	83	84	85	86	87

Needle Art Stitches

620	62	–	–	63	64	65	66	68	67	69	70	–	71	–	72
630	88	89	90	91	92	93	94	95	96	97	98	99	100	101	102

620	73	–	74	75	–	–	76	77	–	78	79	–	–	–	–
630	103	104	105	106	107	108	109	110	111	112	113	114	115	116	117

Satin Stitches

620	80	81	–	82	–	–	83	84	–	85	86	–	87
630	118	119	120	121	122	123	124	125	126	127	128	129	130

620	–	88	89	90	91	–	92	93	94	–	95	–
630	131	132	133	134	135	136	137	138	139	140	141	142

Decorative Stitches

620	–	96	97	98	–	–	99	100	101	102	–
630	143	144	145	146	147	148	149	150	151	152	153

620	–	103	104	105	106	107	–	108	–	–	109
630	154	155	156	157	158	159	160	161	162	163	164

620	110	111	–	112	–	–	113	114	115	116	–
630	165	166	167	168	169	170	171	172	173	174	175

620	–	117	118	119	–	120	121	122	123	124	–
630	176	177	178	179	180	181	182	183	184	185	186

620	125	126	–	127	–	128	129	–	130
630	187	188	189	190	191	192	193	194	195

Optional Feet Stitches

Stitch	№		Name	Description
	620	630		
	131	196	Beading stitch, 4–6 mm	For sewing on pearls, beads etc. Requires optional Beading foot (part number 820605–096).
	132	197	Beading stitch	For sewing on pearls, beads etc. Requires optional Beading foot (part number 820605–096).
	133	198	Candlewicking	Create the look of hand embroidered French knots. Requires optional Candlewicking Foot for IDT™ system (part number 820613–096).
	134	199	Candlewicking	Create the look of hand embroidered French knots. Requires optional Candlewicking Foot for IDT™ system (part number 820613–096).
	135	200	Joining and edging stitch	For joining two pieces of fabric. Requires optional Join and Fold Edging Foot for IDT™ system (part number 820931–096).
	136	201	Joining and edging stitch	For joining two pieces of fabric. Requires optional Join and Fold Edging Foot for IDT™ system (part number 820931–096).

Alphabets

Block

ABCDEFGHIJKLMNOPQRSTUVWXYZ
abcdefghijklmnopqrstuvwxyz
ÅÄÖÜÆØÑß&?!
åàáäèéëêíóöæøùúüçñ'@
1234567890.,-_

Cyrillic

АБВГДЕЖЗИЙКЛМНОПРСТУФХЦЧ
ШЩЪЫЬЭЮЯ
абвгдежзийклмнопрстуфхцчшщъыьэюя
1234567890ё&?!'@.,-_

2 Preparations

Unpacking

1. Place the box on a steady, flat surface. Lift the machine out of the box, remove the outer packaging and lift off the machine hard cover.
2. Remove all outer packing material and the plastic bag.

*Note: Your PFAFF® **ambition™ 620/quilt ambition™ 630** machine is adjusted to provide the best stitch result at normal room temperature. Extreme hot and cold temperatures can affect the sewn result.*

Note: Some fabrics have a lot of excess dye which can cause discoloration on other fabric but also on your sewing machine. This discoloring may be very difficult or impossible to remove. Fleece and denim fabric, especially red and blue, often contain a lot of excess dye. If you suspect that your fabric/ready-to-wear garment contains a lot of excess dye, always pre-wash it before sewing to avoid the discoloring.

Connect the Power Cord and Foot Control

Among the accessories you will find the power cord and the foot control.

Note: Consult a qualified electrician if in doubt as how to connect the machine to the power source. Unplug the power cord when the machine is not in use.

For this sewing machine, foot control model C-9000 manufactured by CHIEN HUNG TAIWAN Ltd must be used.

1. Connect the foot control cord to the front socket on the bottom right side of the machine (A).
2. Connect the power cord to the rear socket on the bottom right side of the machine (B). Plug the cord into the wall socket.
3. Press the ON/OFF switch to ON to turn on power and light (C).

For the USA and Canada

This sewing machine has a polarized plug (one blade wider than the other). To reduce the risk of electric shock, this plug is intended to fit in a polarized outlet only one way. If the plug does not fit fully in the outlet, reverse the plug. If it still does not fit, contact a qualified electrician to install the proper outlet. Do not modify the plug in any way.

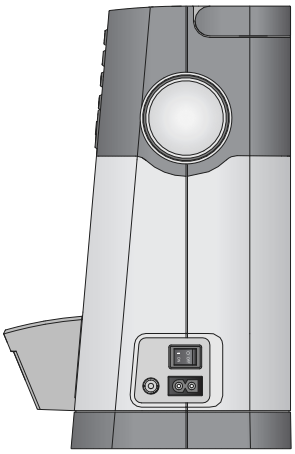

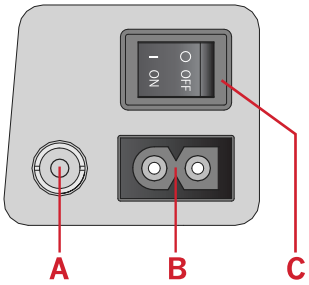

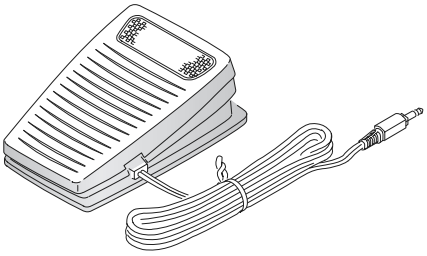

Pack Away After Sewing

1. Switch the main switch off.
2. Unplug the cord from the wall socket and then from the machine.
3. Unplug the foot control cord from the machine. Wind the cord around the foot control for easy storage.
4. Place all accessories in the accessory tray. Slide the tray on to the machine around the free arm.
5. Place the foot control in the space above the free arm.
6. Put on the hard cover.

LED Lights

Your machine has LED lights which distribute the light evenly over the sewing area and eliminates shadows.

Free Arm

To use the free arm, slide off the accessory tray. When attached, a hook keeps the accessory tray securely attached to the machine. Remove the tray by sliding it to the left.

Mounting Machine in Sewing Cabinet

There are two holes on the underside of the machine designed for mounting the machine into a sewing cabinet. Attach the machine with M6 screws.

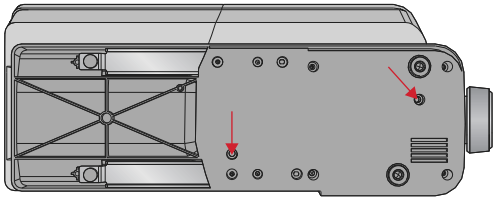

Thread Cutter

To use the thread cutter, pull the thread from back to front as shown (A).

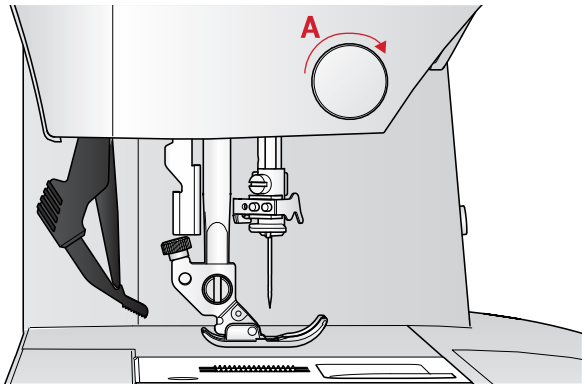

Spool Pins

Your machine has two spool pins, a main spool pin and an auxiliary spool pin. The spool pins are designed for all types of thread. The main spool pin is adjustable and can be used both in a horizontal position (the thread reels off the spool) and a vertical position (the thread spool rotates). Use the horizontal position for normal threads and the vertical position for large spools or specialty threads.

Horizontal Position

Place a felt pad and the thread spool on the spool pin. Make sure that the thread reels off from the front of the spool (A) and slide on a spool cap.

Note: Not all thread spools are manufactured in the same way. If you experience problems with the thread, turn the spool so that the thread reels off in the opposite direction or place the thread in the vertical position.

Depending on the size of thread spool, reverse the direction of the spool cap (B).

Use the small cap when you use cross wound thread (C).

Set the thread net over the spool if thread unrolls easily (D).

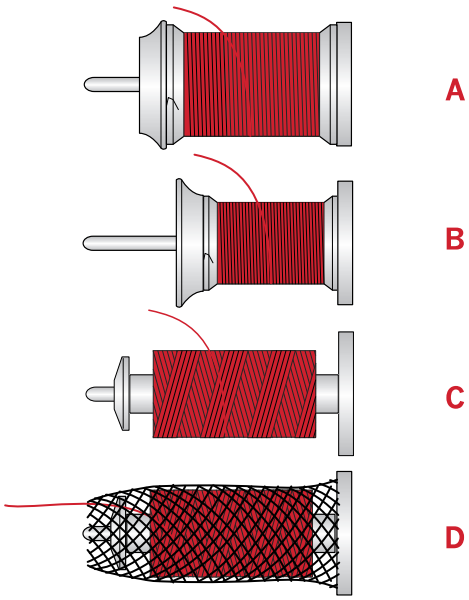

Vertical Position

Raise the spool pin to the vertical position. Place a felt pad under the thread spool. This is to prevent the thread from reeling off too fast. Do not place a spool cap on top of the spool pin as that would prevent the spool from rotating.

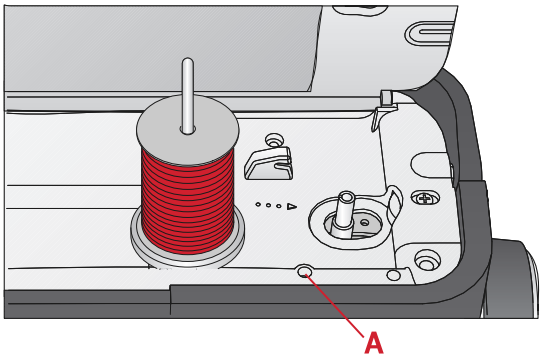

Main spool pin in vertical position.

Auxiliary Spool Pin

The auxiliary spool pin is used when winding a bobbin thread from a second spool of thread or for a second spool when sewing with a twin needle. Insert the auxiliary spool pin into the hole at the top of the machine (A). Place a felt pad under the thread spool.

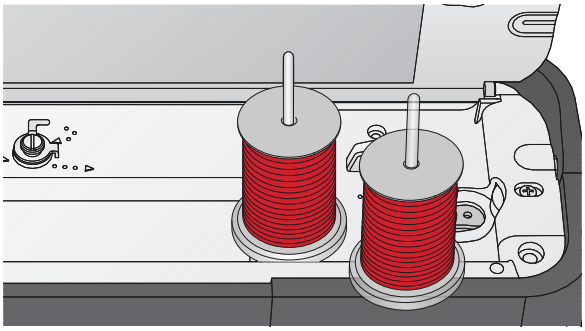

Auxiliary spool pin and main spool pin in vertical position.

Threading the Machine

Make sure that the presser foot is raised and the needle is in its highest position.

1. Place a felt pad and the thread spool on the spool pin and fit a spool cap of the right size and direction.

   Note: Hold thread with both hands to prevent it from slacking while threading. This ensures that the thread will be positioned properly in the threading path.

2. Pull the thread under the thread guide (A) from the right to the left.
3. Pull the thread from the right to left along the slot.
4. Pull the thread between the tension discs (B).
5. Thread down through the right-hand threading slot and then upwards through the left-hand threading slot.
6. Bring the thread from the right into the take-up lever (C) and down in the left-hand threading slot into the needle thread guide (D).
7. Thread the needle.

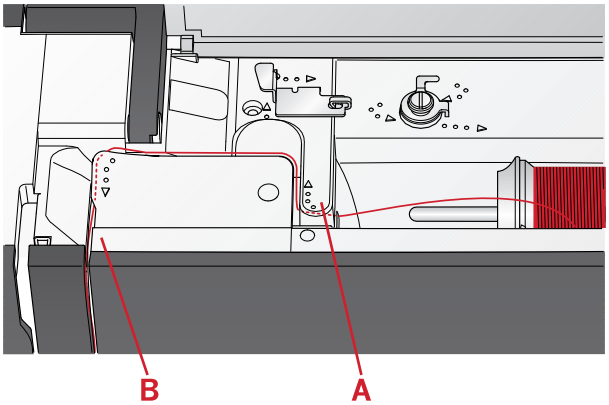

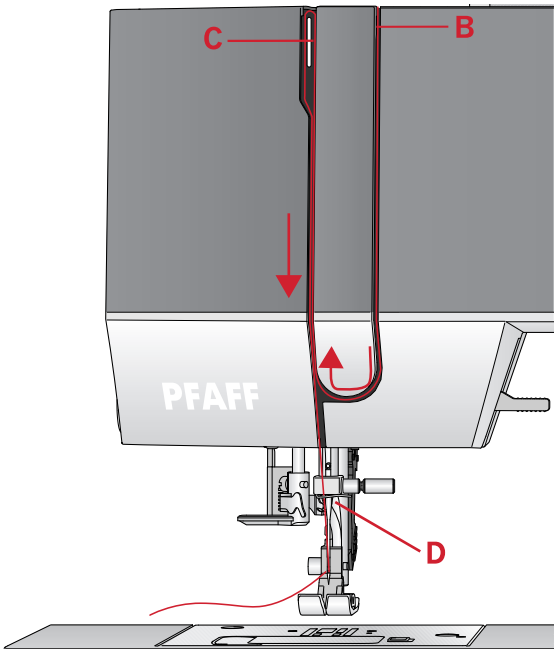

Needle Threader

The needle threader allows you to thread the needle automatically. The needle must be in its highest position to use the built-in needle threader. Press the needle up/down button to make sure the needle is fully raised.

We also recommend lowering the presser foot.

1. Use the handle (A) to pull the needle threader all the way down. Metal flanges encase the needle and a small hook will pass through the needle eye.
2. Place the thread from the back over the thread guide (B) and under the small hook (C).
3. Let the needle threader gently swing back. The hook pulls the thread through the needle eye and forms a loop behind the needle. Pull the thread loop out behind the needle.
4. Raise the presser foot and place the thread under it.

Note: The needle threader is designed to be used for size 70-120 needles. You cannot use the needle threader for size 60 needles or smaller, wing needles or twin needles.

There are also some optional accessories that require manual threading of the needle.

When threading the needle manually, make sure that the needle is threaded from front to back.

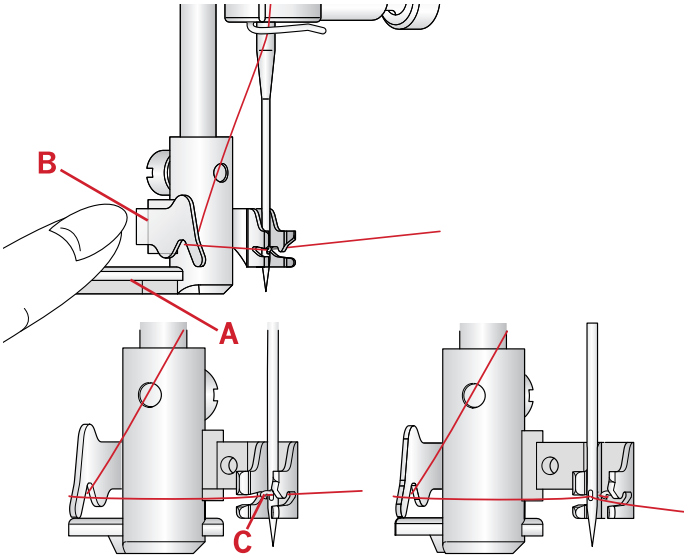

Threading for Twin Needle

Replace the sewing needle with a twin needle. Make sure that the presser foot is raised and the needle is in its highest position.

1. Thread the first thread as described on previous page.
2. Thread the needle eye by hand from front to back.
3. Insert the auxiliary spool pin and slide on a felt pad. Place the second thread on the spool pin.
4. Bring thread to the left and pull thread into the thread guide (A) from back to front.
5. Thread the second thread the same way as the first.
6. Make sure that one thread is inside the needle thread guide and the other one outside.
7. Thread needle eye by hand from front to back.

Note: The weight and irregular surface of specialty threads, like metallics, can cause increased tension on the thread. Reducing the tension will prevent needle breakage.

Note: Activate twin needle and select the correct twin needle width in the settings menu. This will limit the width of all stitches for that needle size to prevent damage to presser foot and needle.

Note: Do not use asymmetrical twin needles, since they may damage your sewing machine.

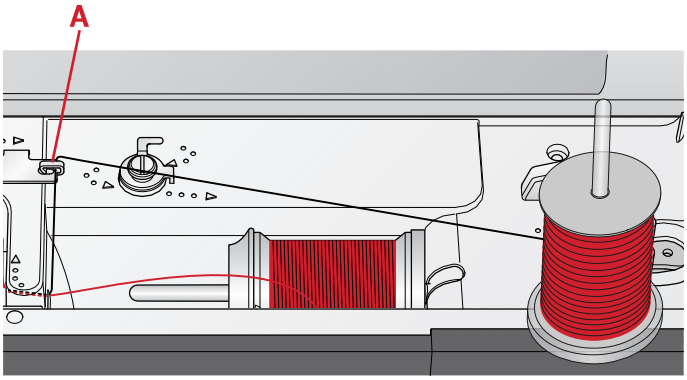

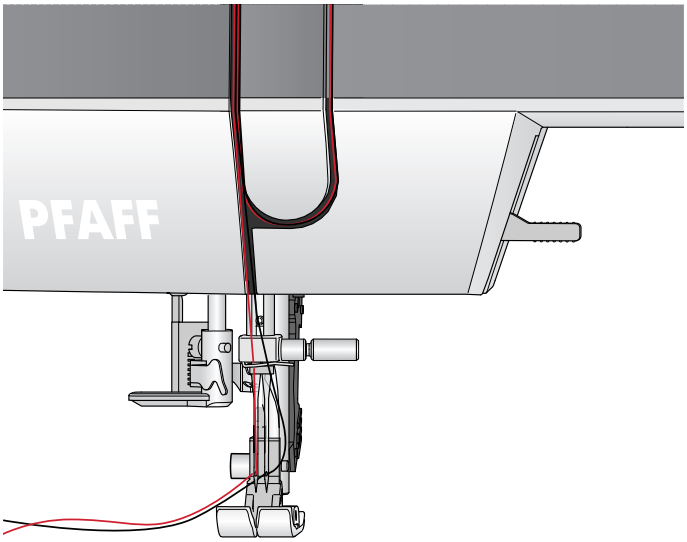

Bobbin Winding

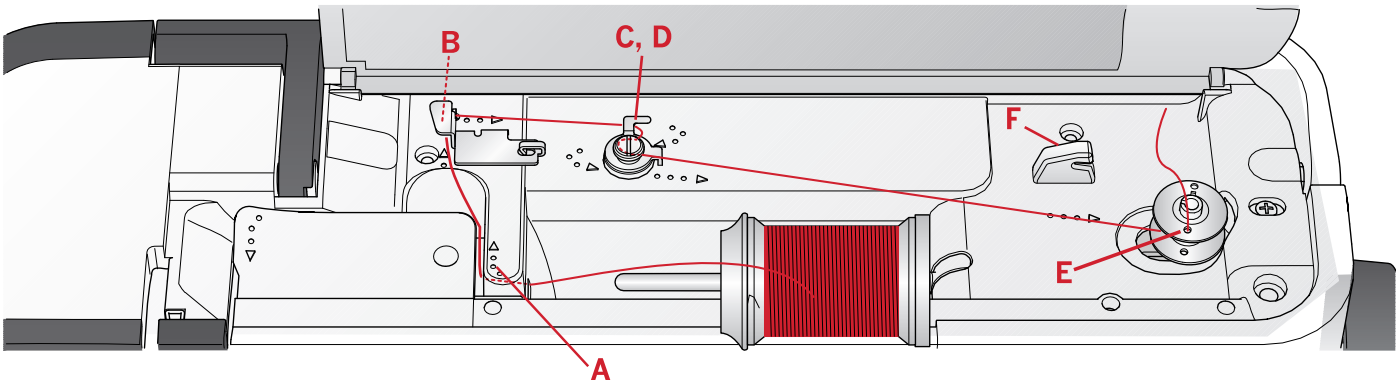

Winding From Horizontal Position

1. Place the felt pad and thread spool on the spool pin in horizontal position. Slide on a spool cap of the right type and direction.
2. Place the thread under the thread guide (A) from right to left. Pull the thread to the rear and around the thread guide (B) from left to right.
3. Pull thread to the right and then through the thread guide (C) from back to front. Pass thread under tension disc (D) in counter clockwise direction.

   Note: Make sure the thread is pulled securely inside the tension disc for correct thread tension.

4. Thread through the hole in the empty bobbin (E) from the inside to the outside.
5. Place the bobbin on the bobbin winder spindle.
6. Push the bobbin lever to the right to wind. A pop-up appears on the screen to inform you that bobbin winding is active. Press the foot control or the start/stop button to start winding the bobbin. Hold the end of the thread firmly when starting to wind.

   When the bobbin is full, release the foot control or press the start/stop button again to stop. Push the bobbin lever to the left. The pop-up closes. Remove the bobbin and cut the thread using the bobbin thread cutter (F).

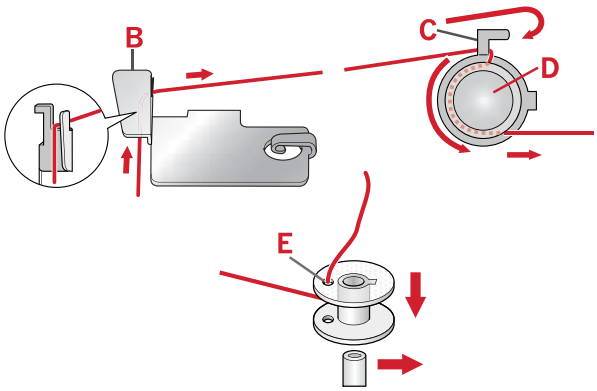

Winding Through the Needle

Make sure that the presser foot is raised and the needle is in its highest position. Bring the thread up from the needle, under the presser foot, upward through the left-hand threading slot and through the bobbin thread guide (A). Then follow step 3 to 6.

Note: Use a metal presser foot when bobbin winding from the needle.

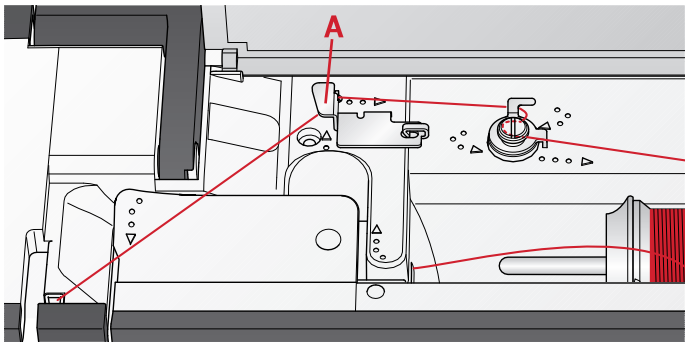

Inserting the Bobbin

Make sure that the needle is fully raised and the machine is turned off before inserting or removing the bobbin.

1. Open the bobbin cover by pushing the release button to the right (A). Remove the cover (B).
2. Insert the bobbin in the bobbin case with the thread running in a counterclockwise direction.
3. With a finger held gently on top of the bobbin, pull the thread into notch (C). Then pull the thread at arrow markings into the needle plate thread guide from (C) to (D). Pull the thread at the arrow markings into the needle plate thread guide from (D) to (E). To cut off excess thread, pull thread to the right over the blade (E).
4. Replace the bobbin cover.

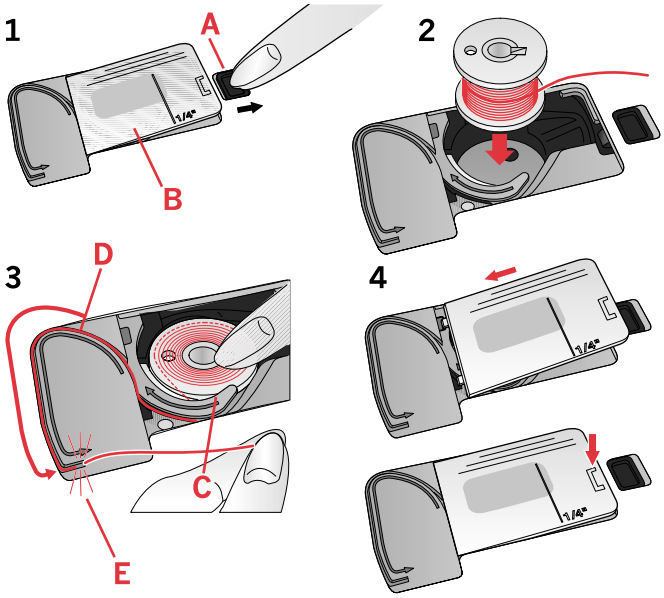

IDT™ System (Integrated Dual Feed)

For sewing any fabric precisely, the PFAFF® **ambition™ 620/quilt ambition™ 630** machine provides the ideal solution: the integrated dual feed, IDT™ system. As on industrial machines, the IDT™ system feeds the fabric from the top and bottom at the same time. The material is fed precisely, eliminating puckering on seams in light weight fabrics such as silk and rayon. The dual feed action of the IDT™ system prevents layers from shifting while sewing, keeping quilt layers aligned and ensuring a more perfect match when sewing plaid or striped fabrics.

Engaging the IDT™ System

Important: For all work with the IDT™ system, use presser feet with the center back cut-out (A).

Raise the presser foot. Press the IDT™ system down until it engages.

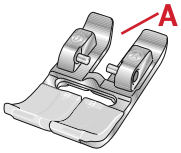

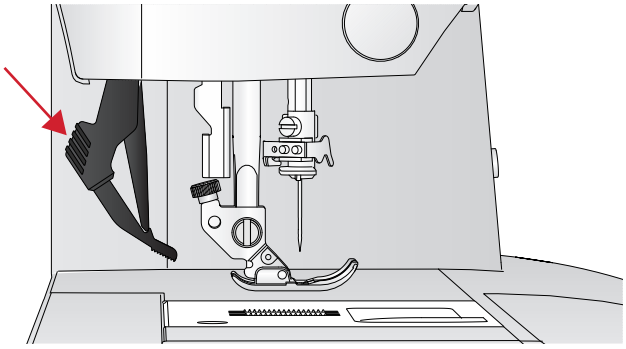

Disengaging the IDT™ System

Raise the presser foot. Hold the IDT™ system with two fingers at the ribbed ankle. Pull the IDT™ system down, then pull it away from you to release the IDT™ system slowly upward.

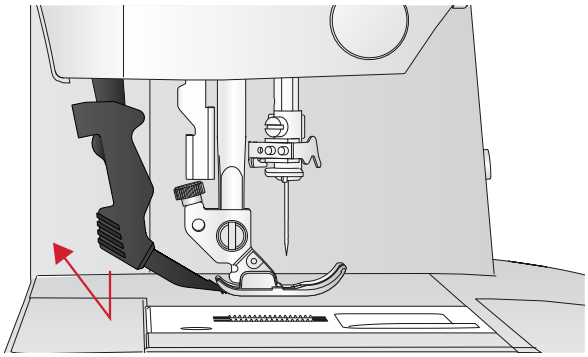

Needles

The sewing machine needle plays an important role in successful sewing. Use only quality needles. We recommend needles of system 130/705H. The needle package included with your machine contains needles of the most frequently used sizes.

Universal Needle

Universal needles have a slightly rounded point and come in a variety of sizes. For general sewing in a variety of fabric types and weights.

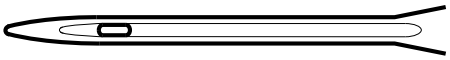

Universal needle.

Stretch Needle

Stretch needles have a special scarf to eliminate skipped stitches when there is a flex in the fabric. For knits, swimwear, fleece, synthetic suedes and leathers.

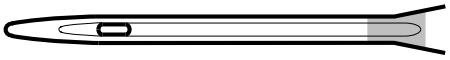

Stretch needle - marked yellow.

Denim Needle

Denim needles have a sharp point to penetrate tightly woven fabrics without deflecting the needle. For canvas, denim, microfibers.

Denim needle – marked blue.

Wing Needle

The wing needle has wide wings on the side of the needle to poke holes in the fabric when sewing entredeux and other hemstitches on natural fiber fabrics.

Note: For this machine, use wing needle size 100. Wing needle is not included with the machine.

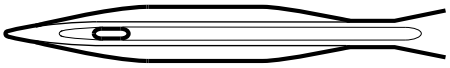

Wing needle.

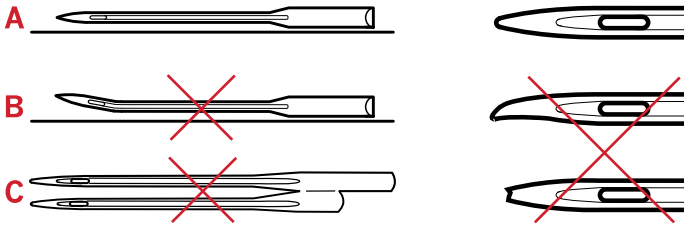

Note: Change the needle often. Always use a straight needle with a sharp point (A).

A damaged needle (B) can cause skipped stitches, breakage or snapping of the thread. It can also damage the needle plate.

Do not use asymmetrical twin needles (C), they can damage your sewing machine.

Changing the Needle

1. Use the hole in the multi-purpose tool to hold the needle.
2. Loosen the needle screw. Use the screw driver if necessary.
3. Remove the needle.
4. Insert the new needle, using the multi-purpose tool. Push the new needle upwards with the flat side away from you until it will go no further.
5. Tighten the needle screw as tight as it will go.

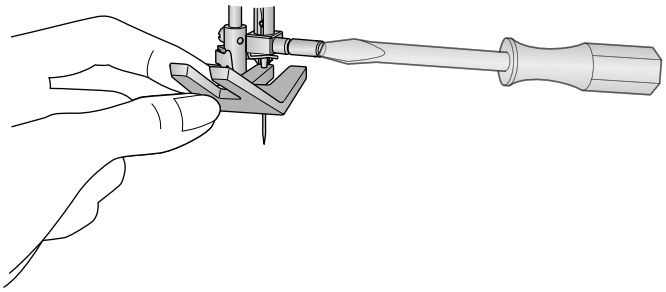

Lowering Feed Dogs

You can lower the feed dogs by moving the switch at the back of the free arm to the left. Move the switch to the right if you wish to raise the feed dogs.

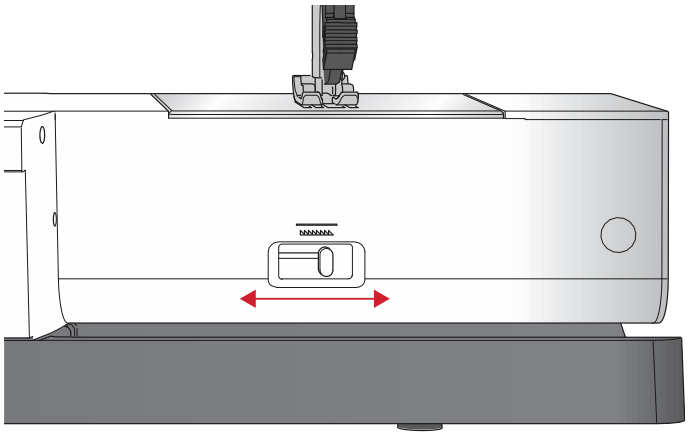

Presser Foot Pressure

The presser foot pressure has been pre-set to the standard value "N". In most cases, you do not need to adjust the presser foot pressure. For specialty techniques, or when sewing on very light or heavy fabric, adjusting the pressure can improve the result. For very light fabrics, turn the dial to a lower number. For heavy fabric, turn the dial to a higher number.

Presser Foot Lift

The presser foot is lowered or raised with the presser foot lift (A). If you are sewing on heavy fabric or several layers of fabric, the presser foot can be raised higher (B) to make it easier to place the fabric underneath the presser foot.

Note: The machine will not start when the presser foot is raised (except for bobbin winding).

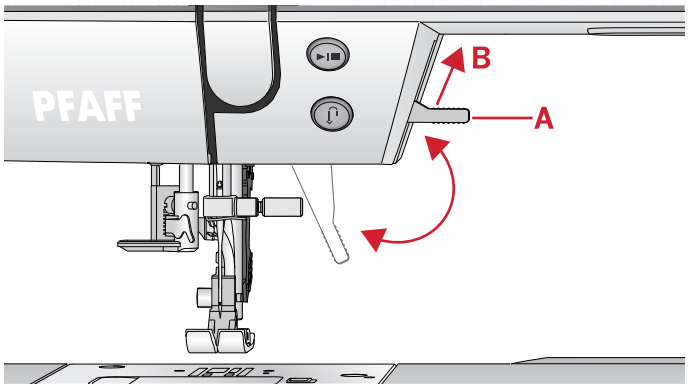

Changing the Presser Foot

Remove Presser Foot

Press the presser foot downwards until it disengages from the presser foot holder.

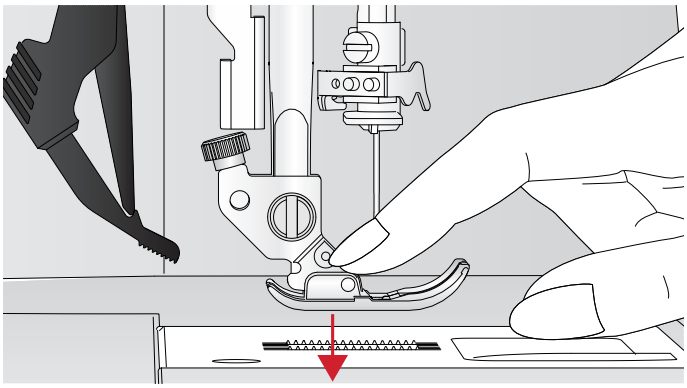

Attach Presser Foot

Place the presser foot under the presser foot holder (A) lining up the notch (B) with the pins (C). Lower the presser foot lift and the presser foot will engage in the presser foot holder.

Note: Check that the presser foot is properly attached by raising the presser foot lift.

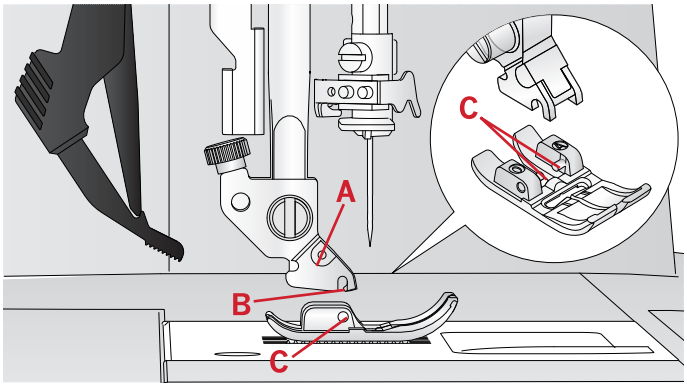

3 Operating your **ambition™ 620**

Buttons and Indicators

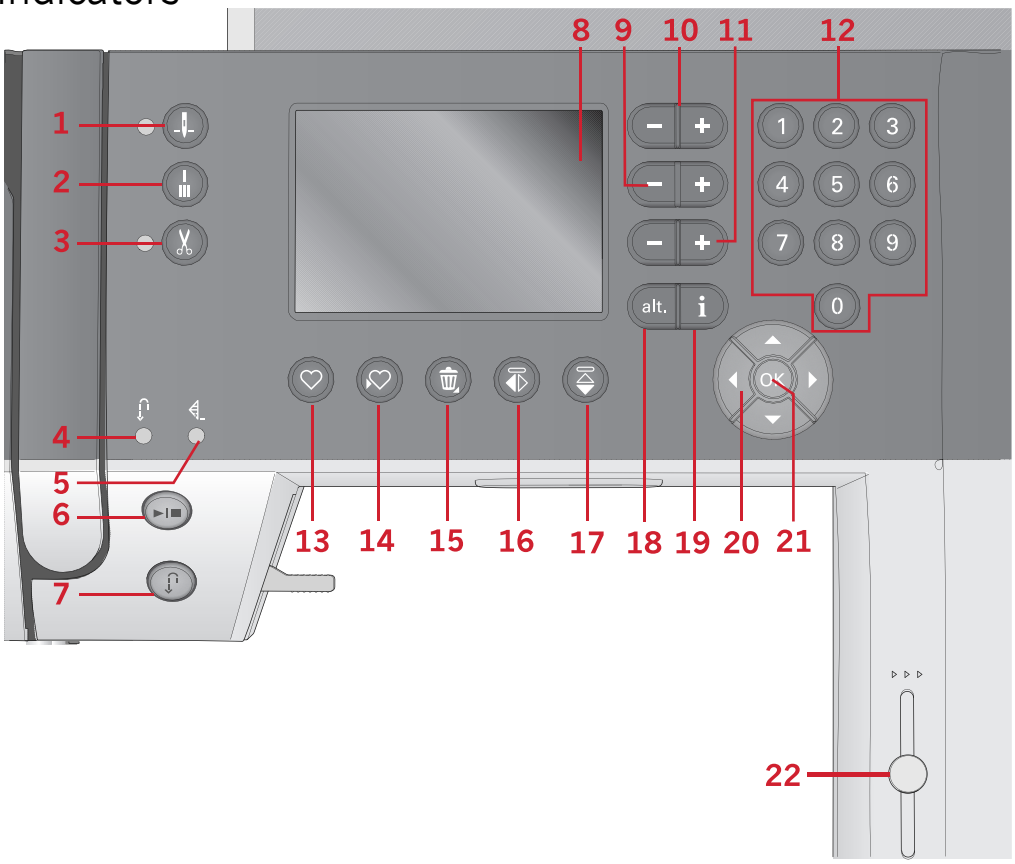

1. Needle stop up/down button with indicator
2. Tie-off button with indicator (5)
3. Thread snips button with indicator
4. Indicator for reverse (7)
5. Indicator for tie-off (2)
6. Start/stop button
7. Reverse button with indicator (4)
8. Graphic display
9. Stitch width/stitch positioning buttons
10. Cursor buttons
11. Stitch length/stitch density buttons
12. Direct selection buttons
13. Load button
14. Save personal stitch or sequence button
15. Delete button
16. Mirror side to side button
17. Mirror end to end button
18. Alt button
19. Info button
20. Wheel buttons
21. OK button
22. Speed control lever

Graphic Display

The graphic display lets you view all your selections and options. Stitches are shown in real size (except for buttonholes).

Needle Stop Up/Down Button with Indicator

Press this button to move the needle up or down. The setting of the needle stop position is changed at the same time. When needle down is activated, the indicator is lit, the needle will stop in the down position. You can also tap the foot control to raise or lower the needle.

Tie-off Button with Indicator

Press the tie-off button while sewing and your machine immediately sews a few tie-off stitches and stops automatically.

To set the machine to perform tie-off at the end of a stitch or sequence, press the button before starting to sew. The indicator becomes lit. After sewing the desired length of stitching, press the reverse button while actively sewing. The machine will complete the current stitch or sequence, tie-off and stop automatically.

To sew only one repetition of a stitch or sequence, first press the tie-off button and then the reverse button before starting to sew. The indicators become lit. The

machine will sew the selected stitch or sequence once, tie-off and stop automatically.

Note: The tie-off function is not available for stitches 22-32.

Thread Snips Button with Indicator

Press the button when you are not sewing and your sewing machine cuts the top and bobbin threads and raises the needle. The thread snips indicator will be lit. To cut before the needle moves to the start position of the next stitch, press the thread snips button while sewing. The indicators (3 & 5) will be lit and the machine will cut the threads after the stitch or sequence has completed.

Start/Stop Button

Press this button to start or stop the machine without using the foot control. Press the button once to start and press it again to stop.

Reverse Button with Indicator

For permanent reverse, press the button before starting to sew. The reverse indicator will be lit and the machine sews in reverse until you press the button again to cancel. If you press the reverse button while sewing, the machine sews in reverse for as long as you keep the button pressed. The reverse indicator is lit when the reverse button is pressed. Reverse is also used when sewing darning stitches.

Stitch Width/Stitch Positioning Buttons

Increase or decrease the stitch width using the + and - buttons. For straight stitches, use the + and - buttons to change the stitch position.

Cursor Buttons

By pressing the + and - buttons, cursor will move to right and left.

Stitch Length/Stitch Density Buttons

Increase or decrease the stitch length using the + and - buttons. For satin stitches, use the + and - buttons to change the density for the selected stitch.

Direct Selection Buttons

By pressing one of, or a combination of, the 0 to 9 buttons, you select the stitch represented by that number immediately.

Load Button

Press this button to load a previously saved personal stitch or sequence.

Save Personal Stitch or Sequence button

Press this button to save a stitch or sequence to the machine's memory.

Delete Button

For deleting stitches and letters in a sequence. Long touch to delete the whole sequence.

Mirror Side to Side Button

For mirroring stitches and sequences side to side.

Mirror End to End Button

For mirroring stitches and sequences end to end.

Alt Button

When you select a satin stitch, the density settings will be shown on the graphic display. By pressing the alt button, the elongation will be shown instead of the stitch density.

Info Button

Press this button to toggle the recommendations view on and off.

Wheel Buttons

Use these buttons to move around the graphic display. The wheel has up and down arrow buttons, left and right arrow buttons and a center button, OK, to confirm your selections. The wheel has several functions, for example selecting tabs or letters and moving between options in the settings menu.

OK Button

The wheel center button, OK, is used to confirm your selections or clear messages on your screen.

Speed Control Lever

The speed control lever sets the maximum sewing speed. To increase sewing speed, slide the lever upwards, to decrease sewing speed, slide the lever downwards.

Settings Menu

In the settings menu, you can adjust the machine settings, sound settings and screen settings. Select the Settings Menu tab by pressing the left or right wheel buttons until settings is selected. Select the setting you wish to adjust by pressing the up or down wheel arrows until it is selected. Use the left or right arrows to make your adjustments. Activate by pressing OK. A solid box means a function is activated, an empty box means it is not activated.

Note: If a setting cannot be combined with a previously selected setting, the outlines of that box will be dashed.

To close the settings menu, press the down button on the wheel until you reach the end of the settings menu and the settings menu tab is highlighted.

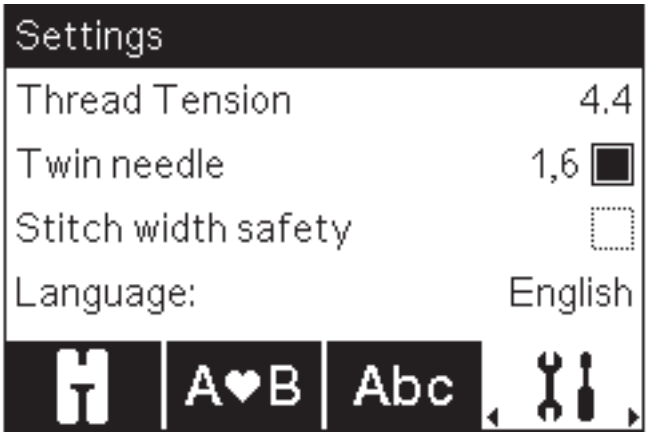

Thread Tension

Your sewing machine will electronically pre-set a thread tension for the selected stitch. Depending on the fabric, batting, thread etc, the tension may need to be adjusted. Select the settings menu to adjust the thread tension. The changes only affect the selected stitch. The setting will go back to default when you select another stitch.

In sewing mode, press the info button to see the current selected thread tension.

Twin Needle

Activate the twin needle program and use the left and right arrow buttons on the wheel to set the twin needle width. When a twin needle size is selected, the width of all stitches is limited for that needle size to prevent needle breakage.

In sewing mode, press the info button. The twin needle recommendation icon will be shown. The setting is kept until you deactivate it.

Note: Twin needle and stitch width safety cannot be used at the same time.

Note: A warning pop-up will be shown if you select a stitch that is too wide for the set twin needle size.

Stitch Width Safety

Select this function when using a presser foot for quilting, available as an optional accessory, to lock the center needle position for all stitches and prevent damage to the needle or presser foot.

In sewing mode, press the info button. The stitch width safety icon will be shown. The setting is kept until you deactivate it.

When turning on the machine with this setting activated, a pop-up informs you that the machine is set to straight stitch.

Note: Twin needle and stitch width safety cannot be used at the same time.

Language

Use the left and right arrow buttons to change the language of all text in your machine.

Audible Alarm

Turn all alarm sounds of the machine on or off. Default setting is on.

Contrast

Adjust the contrast of the graphic display by using the left and right arrow buttons. The value can be set between -3 to 4 in steps of 1.

Software Version

Check the software version for your sewing machine.

Sewing Mode

Sewing mode is the first view on the graphic display after you turn on the machine. Your selected stitch will be shown in real size in the stitch field. Here you will find all the basic information you need to start sewing. This is also the menu where you adjust the settings of your stitch. Straight stitch is selected by default.

Sewing Mode — Overview

1. Stitch field
2. Selected stitch number
3. Stitch length/density
4. Stitch width/stitch positioning

Note: The tabs in the bottom of the screen indicate which mode is selected. The selected mode is highlighted.

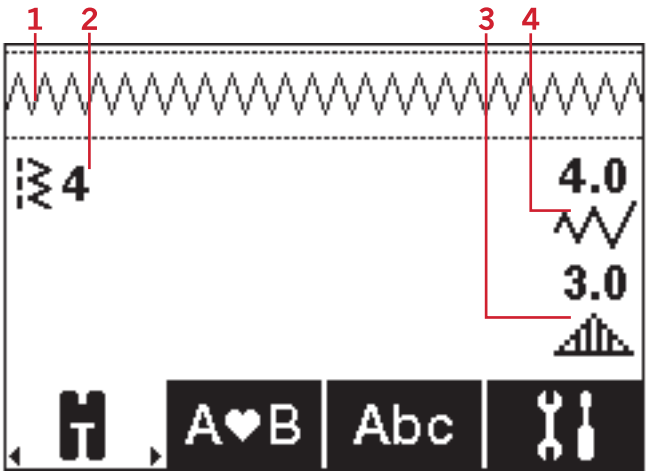

Select a Stitch

By pressing one of the direct selection buttons, you select that stitch number immediately. Press two or three digits in quick succession to select a stitch from 10 and up. If the stitch number does not exist, you will hear a beep and the last entered digit will be selected as a stitch. Use the up and down arrow buttons on the wheel to step between stitches.

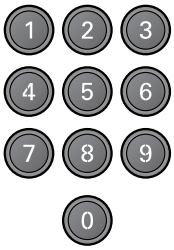

Sewing Recommendations

Press the info button to show sewing recommendations for the current stitch. Press the info button again to hide the information.

1. Needle recommendation/setting

Universal needle

Set for twin needle

Wing needle recommended

Set for stitch width safety

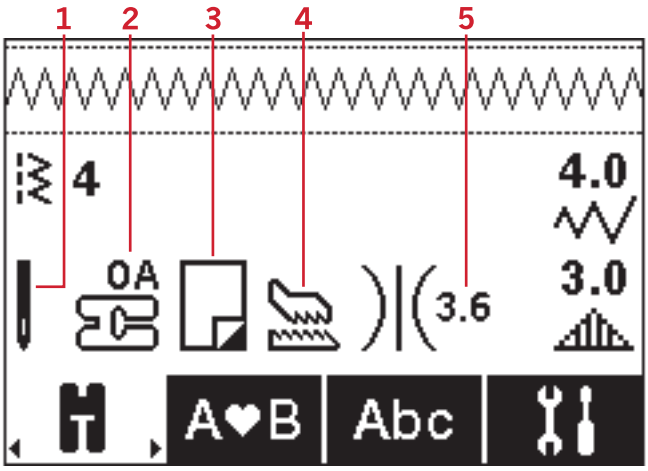

2. Presser foot recommendation
3. Stabilizer recommended
4. Feed dog/IDT™ system recommendation
5. Thread tension value

Note: All symbols and options will not be shown at the same time.

Stitch Adjustments

Your machine will automatically select optimal settings for each stitch. You can make adjustments to every stitch as desired. Adjusted settings only affect the selected stitch and will be reset to default when another stitch is selected. Adjusted settings are not automatically saved when the machine is turned off.

The values for stitch length and stitch width are shown to the right of the graphic display. Use the buttons next to the numbers to make adjustments. When a setting is changed the numbers will be highlighted. When trying to exceed minimum or maximum settings for width and length, a warning sound will be heard.

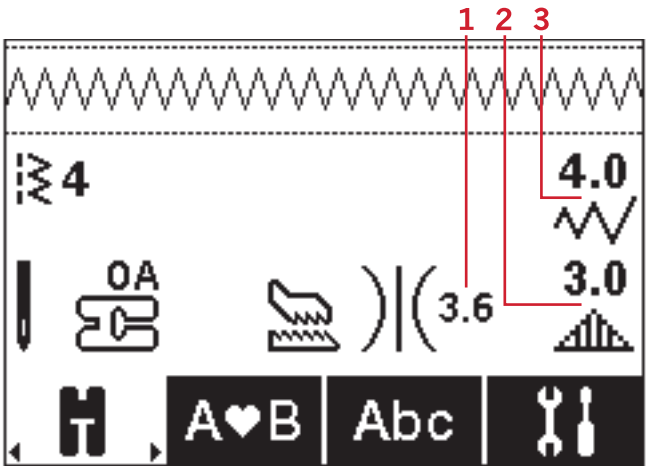

1. Thread tension
2. Stitch length/ stitch density/elongation
3. Stitch width/ stitch positioning

Stitch Width/Stitch Positioning

Increase or decrease the stitch width using + and - buttons. For straight stitches, use + and - to move the stitch position left or right. When a straight stitch is selected, the icon changes to show that stitch positioning is active instead of stitch width.

Stitch Length/Stitch Density

Increase or decrease the stitch length using + and - buttons.

For satin stitches, use the + and - buttons to increase or decrease the stitch density. This is often necessary when specialty threads are used or when a less dense satin stitch is desired. The stitch density does not affect the actual length of the entire stitch. When a satin stitch is selected, the icon (2) changes to show that stitch density is active instead of stitch length.

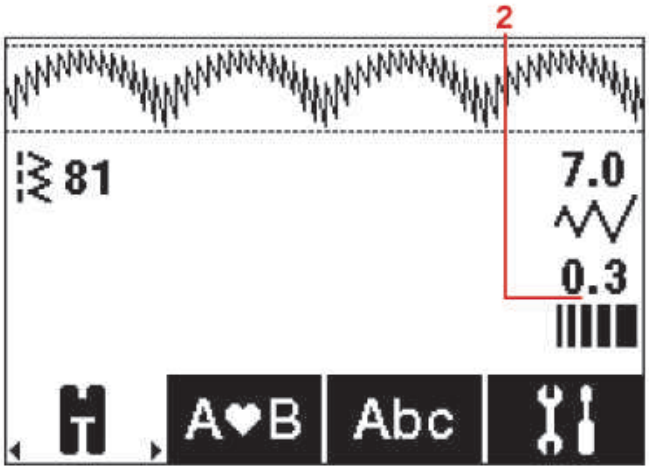

Elongation

Elongation is used to lengthen satin stitches. The entire stitch will be longer but the density will remain the same. Press the alt button to show the elongation setting instead of density for satin stitches. The icon (2) changes to show an elongation symbol. Increase or decrease the elongation of the satin stitch using the + and - buttons. If elongation is not available for the selected stitch, a warning sound will be heard when pressing the alt button and the icon will not change.

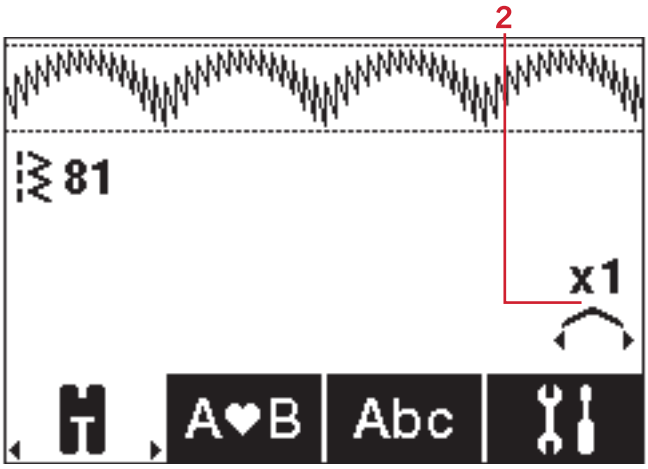

Thread Tension

For the best stitch appearance and durability, make sure the needle thread tension is correctly adjusted, i.e. for general sewing, the threads evenly meet between the two fabric layers. Your sewing machine electronically sets a thread tension for the selected stitch. Depending on the fabric, batting, thread etc, the tension may need to be adjusted. See page 30 for instructions on how to change the setting manually.

If the bobbin thread is visible on the top side of the fabric, the needle thread tension is too tight. Reduce the needle thread tension.

If top thread is visible on the underside of the fabric, the needle thread tension is too loose. Increase the needle thread tension.

For decorative stitches and buttonholes, the top thread should be visible on the underside of the fabric.

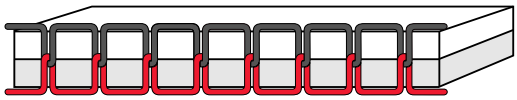

Correct tension

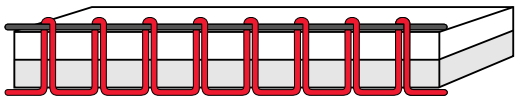

Tension too tight

Tension too loose

Mirroring

To mirror stitches or sequences side to side, press the mirror side to side button. To mirror end to end, press the mirror end to end button.

Left: mirror side to side button. Right: mirror end to end button.

Personal Stitch

Save Personal Stitch

Save your personal stitch in your machine by pressing the save button. Adjustments in stitch length, width, density, elongation, mirroring and thread tension will be saved.

Note: Some special stitches, such as buttonholes, cannot be saved. A pop-up will inform you of this when you try to save such a stitch.

Overwrite Personal Stitch

If the memory is occupied, a pop-up message will appear asking if you wish to overwrite the previously saved stitch or sequence with the new one. Select Yes or No with the arrow buttons and press the OK.

Load Personal Stitch

Load your personal stitch by pressing the load button.

Sequencing

The sequencing function on your machine makes it possible to combine stitches and letters into sequences. You can add up to 60 stitches and/or letters in a sequence. Save your sequence on your machine; reload and sew any time you like. All stitches in your sewing machine can be used for sequencing except for stitch numbers 22–34.

Sequencing - Overview

1. Stitch field
2. Current stitch number
3. Sequencing tab
4. Stitch length/density/elongation
5. Stitch width/stitch positioning

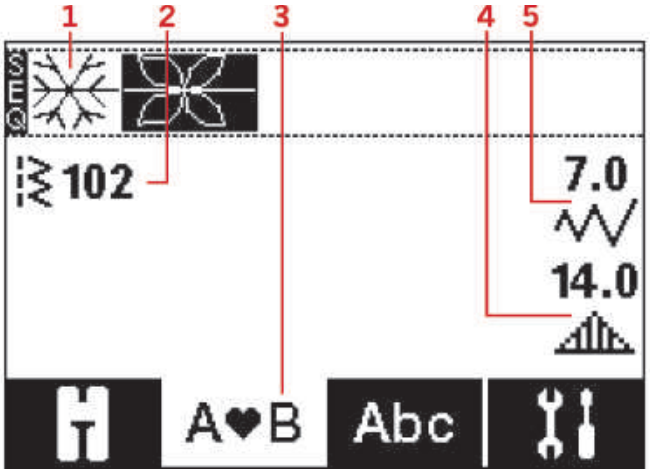

Create a Sequence

1. To enter sequencing; press the left or right wheel arrows until the sequencing tab is highlighted.
2. Select the stitch you wish to use (see page 32 on how to select a stitch). The stitch will appear in the stitch field.

Note: The current position in the stitch field is highlighted. Inserted stitches will be placed at the next position. Move the position through the sequence using the - and + buttons just to the right of the stitch field.

Using the Alphabet

Alphabet Mode, Sequencing- Overview

1. Stitch field
2. Alphabet
3. Font selection
4. Character set (upper case/lower case, normal/ special symbols)

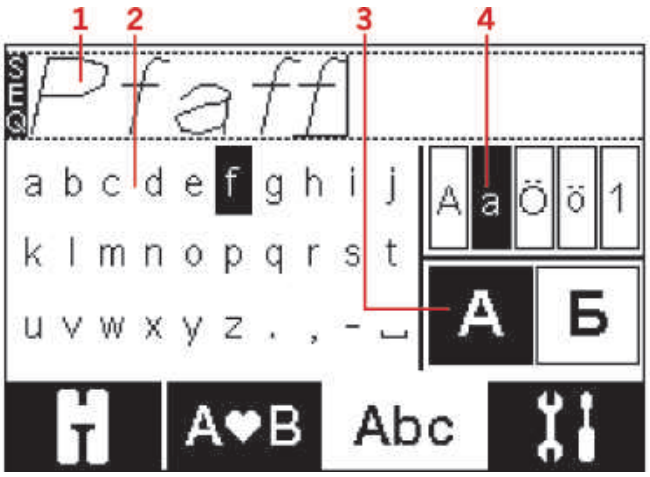

Create a Text Sequence

1. Select the alphabet sequencing tab on the graphic display by pressing the wheel buttons left or right.
2. Press the up arrow on the wheel buttons to enter the text sequence mode.
3. Move the cursor through the stitch field (1) with the - and + buttons just to the right of the stitch field to where you want to add a letter.
4. Select a letter from the alphabet (2) using the arrow buttons and press OK to insert it. It will be placed at the cursor position in the stitch field.

Note: The selected letter in the alphabet will be highlighted.

Select Character Set and Font

Press the - or + buttons just to the right of the character set indicator (4) to change character set between upper or lower case, normal or special letters and symbols.

Press the - or + buttons just to the right of the font indicator (3) to change fonts.

To select another tab, press the down button on the wheel until the alphabet sequencing tab indicates arrows, then press the left or right button.

Adjust Text and Stitches

Press the left or right wheel buttons to enter sequencing. You can mirror, adjust length and width or change the density, elongation and stitch position of the selected stitch. The adjustments work just like in sewing mode. See page 32. When you have changed a value, the digits will be highlighted on the graphic display to show that the value is not default.

Note: The adjustments will only affect the stitch at the highlighted position. If you return to sewing mode, all adjustments made there will affect the entire sequence and will not be saved you return to sequencing.

Delete a Stitch or Letter in a Sequence

If you want to delete a stitch, move the highlighted position to the stitch you want to delete and press the delete button. To delete the entire sequence from the stitch field, long press the delete button.

Manage Your Sequences

You can save and reload your sequence. The sequence memory has a space of 60 stitches and letters.

Save Sequence

Saving your sequence works just like in sewing mode. See page 36.

Note: If another sequence is already saved, a pop-up will appear asking if you wish to overwrite. Select yes or no with the arrow buttons and press OK.

Load Sequence

Loading your sequence works just like in sewing mode, see page 36. To load your sequence, press the load button.

Note: When loading a sequence into sewing mode, the value displayed for the sequence will be the letter M.

Sewing a sequence

You can sew the sequence by choosing one of these 3 options; return to sewing mode by selecting the sewing mode tab, press the start/stop button or simply step on the foot control. Your sequence is ready to be sewn out. The sequence will be sewn continuously. If you want to stop at the end of the sequence, press the thread snips while sewing. The machine will tie-off and cut the threads at the end of the sequence.

Note: You can stop at the end of the sequence without cutting the threads by using the tie-off function, see page 28.

Note: Adjustments made in sewing mode will affect the whole sequence. However, these adjustments will not be saved if you return to sequencing.

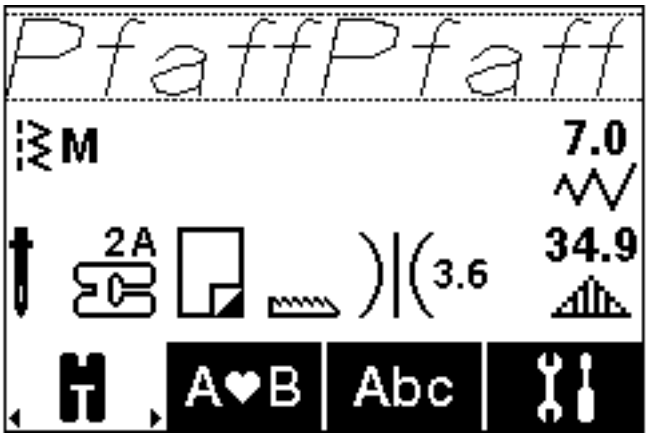

Sequencing Pop-Ups

This Stitch Cannot Be Added in a Sequence
This message is shown if you try to add a buttonhole, eyelet, bartack, darning stitch or the sew-on-button stitch (stitch numbers 22–34) to a sequence. All stitches in your sewing machine can be added in a sequence except for these. Close the pop-up message by pressing the OK button.

This Stitch Cannot Be Saved
This message is shown if you try to save a buttonhole, eyelet, bartack, darning stitch or the sew-on-button stitch (stitch numbers 22–34) to the machine memory. All stitches in your machine can be saved except for these. Close the pop-up message by pressing the OK button.

Sequence Out of Range
If you try to add more than 60 stitches or letters in the sequence this message is shown. Close the pop-up message by pressing the OK button.

Delete All Stitches?
This pop-up message will ask you to confirm when you have chosen to delete an entire sequence in sequencing mode. Select yes or no with the arrow buttons and press OK.

Overwrite?
If there is already a stitch or sequence saved in the machine memory and you press the save button this pop-up will appear asking if you wish to overwrite the previously saved stitch/sequence with the new one. Select yes or no with the arrow buttons and press the OK button.

4 Operating your **quilt ambition™ 630**

Buttons and Indicators

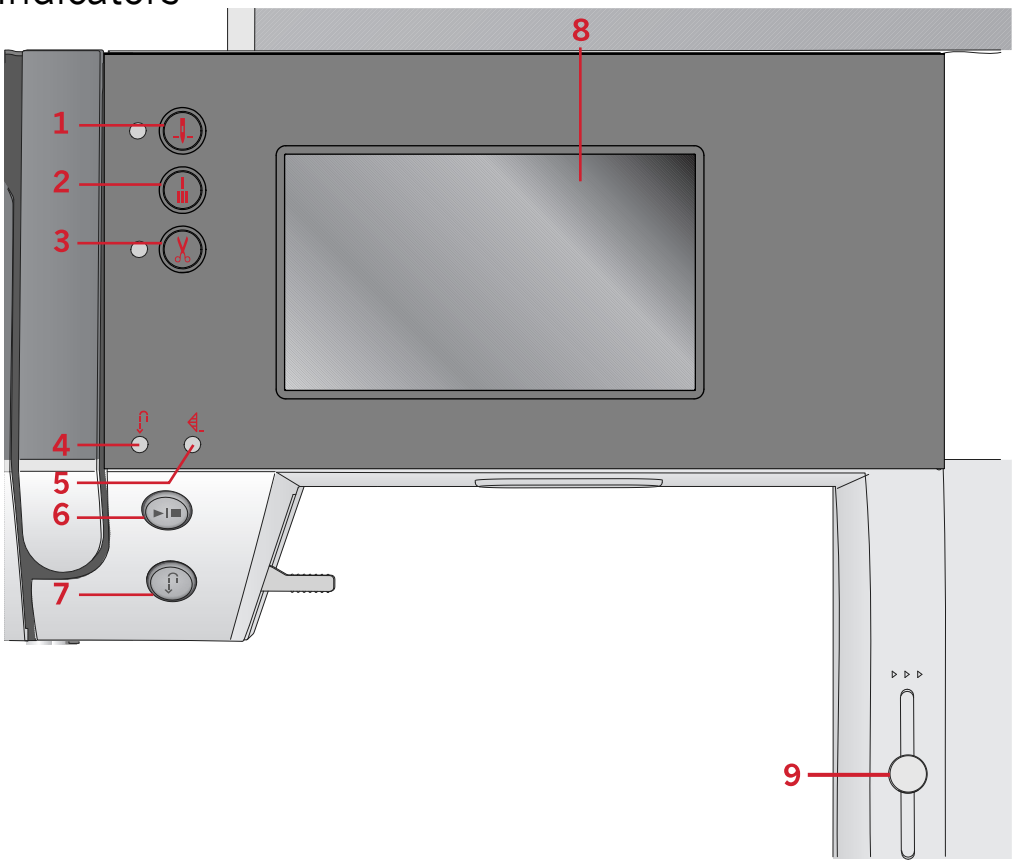

1. Needle stop up/down button with indicator
2. Tie-off button with indicator (5)
3. Thread snips button with indicator
4. Indicator for reverse (7)
5. Indicator for tie-off (2)
6. Start/stop button
7. Reverse button with indicator (4)
8. Graphic display
9. Speed control lever

Graphic Display

The graphic display lets you view all your selections and options. Stitches are shown in real size (except for buttonholes).

Needle Stop Up/Down Button with Indicator

Press this button to move the needle up or down. The setting of the needle stop position is changed at the same time. When needle down is activated, the indicator is lit, the needle will stop in the down position. You can also tap the foot control to raise or lower the needle.

Tie-off Button with Indicator

Press the tie-off button while sewing and your machine immediately sews a few tie-off stitches and stops automatically.

To set the machine to perform tie-off at the end of a stitch or sequence, press the button before starting to sew. The indicator becomes lit. After sewing the desired length of stitching, press the reverse button while actively sewing. The machine will complete the current stitch or sequence, tie-off and stop automatically.

To sew only one repetition of a stitch or sequence, first press the tie-off button and then the reverse button before starting to sew. The indicators become lit. The machine will sew the selected stitch or sequence once, tie-off and stop automatically.

Note: The tie-off function is not available for stitches 32-42.

Thread Snips Button with Indicator

Press the button when you are not sewing and your sewing machine cuts the top and bobbin threads and raises the needle. The thread snips indicator will be lit. To cut before the needle moves to the start position of the next stitch, press the thread snips button while

sewing. The indicators (3 & 5) will be lit and the machine will cut the threads after the stitch or sequence has completed.

Start/Stop Button

Press this button to start or stop the machine without using the foot control. Press the button once to start and press it again to stop.

Reverse Button with Indicator

For permanent reverse, press the button before starting to sew. The reverse indicator will be lit and the machine sews in reverse until you press the button again to cancel. If you press the reverse button while sewing, the machine sews in reverse for as long as you keep the button pressed. The reverse indicator is lit when the reverse button is pressed. Reverse is also used when sewing darning stitches.

Speed Control Lever

The speed control lever sets the maximum sewing speed. To increase sewing speed, slide the lever upwards, to decrease sewing speed, slide the lever downwards.

Settings Menu

In the settings menu, you can adjust the machine settings, sound settings and screen settings. Open by touching the settings button in the graphic display. Select the setting you wish to adjust by touching the up or down arrow buttons. Touch the + and – buttons to adjust the values. Activate settings by touching the circle. A highlighted green circle means a function is activated, an empty circle means it is not activated.

Touch the settings menu button again to close the settings menu.

Thread Tension

Your sewing machine will electronically pre-set a thread tension for the selected stitch. Depending on the fabric, batting, thread etc, the tension may need to be adjusted. Touch the + or – buttons on the graphic display to adjust the thread tension. The changes only affect the selected stitch. The setting will go back to default when you select another stitch.

Twin Needle

Activate the twin needle program in the settings menu. Use the + or – buttons on the graphic display to set the twin needle width. When a twin needle size is selected, the width of all stitches is limited for that needle size to prevent needle breakage.

In sewing mode, the twin needle recommendation icon will be shown. The setting is kept until you deactivate it.

Note: Twin needle and stitch width safety cannot be used at the same time.

Note: A warning pop-up will be shown if you select a stitch that is too wide for the set twin needle size.

Stitch Width Safety

Select this function when using a presser foot for quilting, to lock the center needle position for all stitches and prevent damage to the needle or presser foot when using a single hole foot or needle plate.

In sewing mode, the stitch width safety icon will be shown. The setting is kept until you deactivate it.

When turning on the machine with this setting activated, a pop-up informs you that the machine is set to straight stitch.

Note: Twin needle and stitch width safety cannot be used at the same time.

Language

Use the + or – buttons to change the language of all text in your machine.

Audible Alarm

Turn all alarm sounds of the machine on or off. Default setting is on.

Calibrate Touch Screen

When touching the icons on the screen, the screen might need a calibration to adjust to your touch. Touch to open a special screen for touch screen calibration.

Touch the center of the circle that appears on the screen. The circle fills and a new circle appears. There are five circles in total. When you have touched all five circles, the calibration screen closes.

Note: If the pop-up "Calibration failed" is shown, touch the OK button and retry calibration.

Sewing Mode

Sewing mode is the first view on the graphic display after you turn on the machine. Your selected stitch will be shown in real size in the stitch field. Here you will find all the basic information you need to start sewing. This is also the menu where you adjust the settings of your stitch. Straight stitch is selected by default.

Sewing recommendations for the current stitch are shown in the graphic display when in sewing mode.

Note: All symbols and options will not be shown at the same time.

Sewing Mode — Overview

1. Needle recommendation/setting

Universal needle

Set for twin needle

Wing needle recommended

Set for stitch width safety

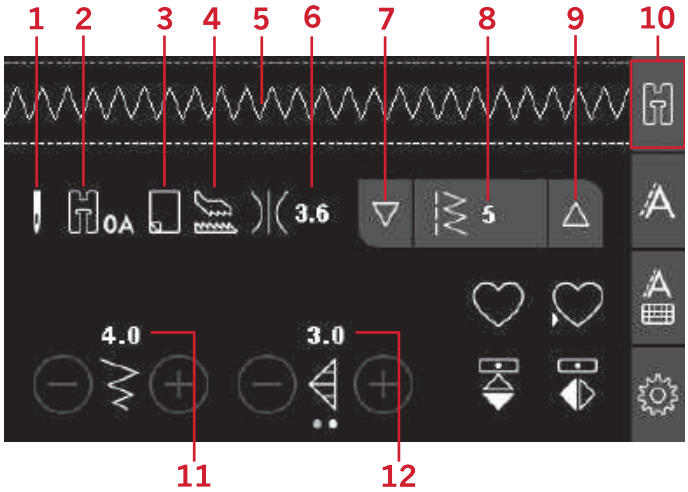

2. Presser foot recommendation
3. Stabilizer recommended
4. Feed dog/IDT™ system recommendation
5. Stitch field
6. Thread tension value
7. Down arrow button to step between stitches
8. Selected stitch number
9. Up arrow button to step between stitches
10. Sewing mode tab
11. Stitch width/stitch positioning
12. Stitch length/density

Note: The tabs on the right side of the screen indicate which mode is selected. The selected mode is highlighted in color.

Select a Stitch

Touch the up or down arrow buttons (7 and 9) on either side of the selected stitch number to step between stitches. Touch the selected stitch number (8) to open the stitch selection menu. To find the stitch you want to use; touch the desired stitch category button then use the up or down arrows until you find the desired stitch. Touch the stitch to select it.

Touch the red X button to close the stitch selection menu without making any changes.

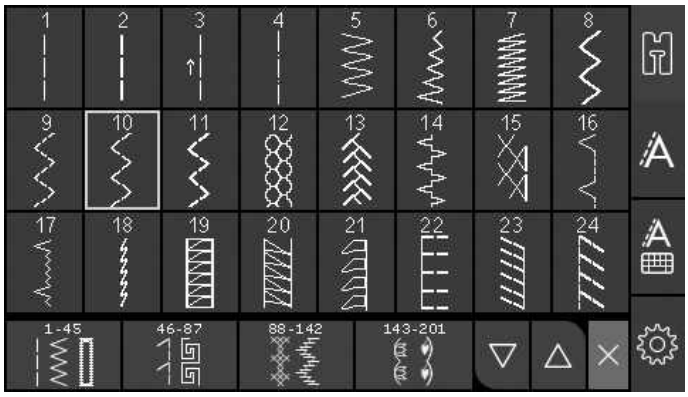

Stitch Adjustments

Your machine will automatically select optimal settings for each stitch. You can make adjustments to every stitch as desired. Adjusted settings only affect the selected stitch and will be reset to default when another stitch is selected. Adjusted settings are not automatically saved when the machine is turned off.

The values for stitch length and stitch width are shown in the lower part of the graphic display. Use the + and - buttons to make adjustments. When a setting is changed the numbers will be highlighted in green. When trying to exceed minimum or maximum settings for width and length, a warning sound will be heard.

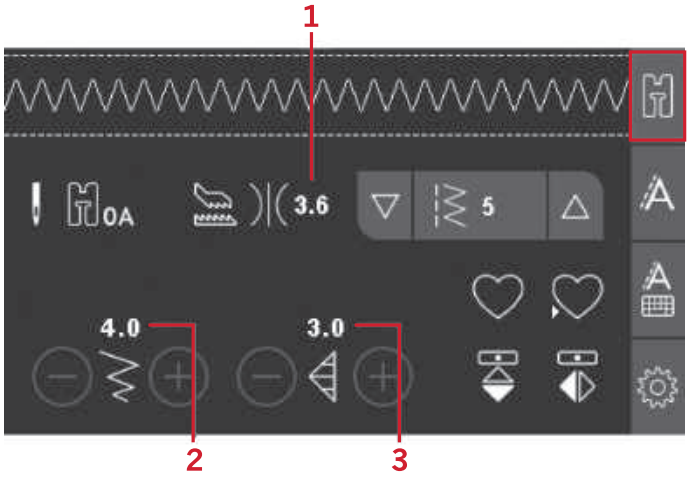

1. Thread tension
2. Stitch width/stitch positioning
3. Stitch length/stitch density/elongation

Stitch Width/Stitch Positioning

Increase or decrease the stitch width using + and - buttons. For straight stitches, use + and - to move the stitch position left or right. When a straight stitch is selected, the icon changes to show that stitch positioning is active instead of stitch width.

Stitch Length/Stitch Density

Increase or decrease the stitch length using + and - buttons.

For satin stitches, use the + and - buttons to increase or decrease the stitch density. This is often necessary when specialty threads are used or when a less dense satin stitch is desired. The stitch density does not affect the actual length of the entire stitch. When a satin stitch is selected, the icon (2) changes to show that stitch density is active instead of stitch length.

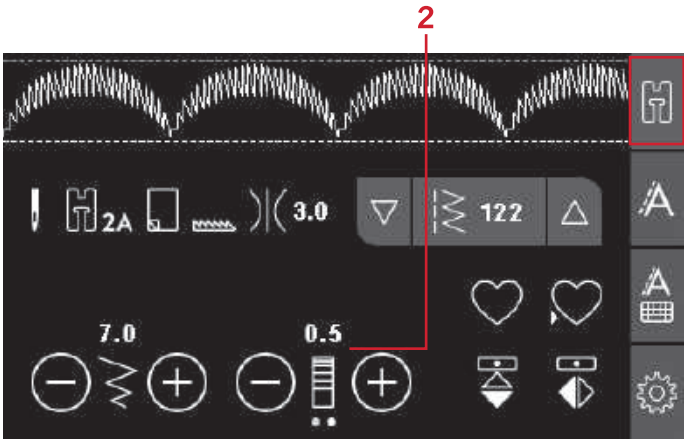

Elongation

Elongation is used to lengthen satin stitches. The entire stitch will be longer but the density will remain the same. Touch the dots to toggle between adjusting the stitch density and the stitch elongation. The icon (2) changes to show an elongation symbol. Increase or decrease the elongation of the satin stitch using the + and - buttons.

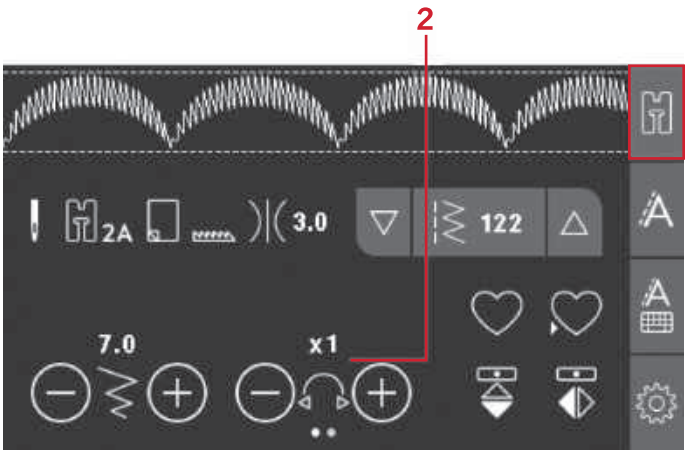

Thread Tension

For the best stitch appearance and durability, make sure the needle thread tension is correctly adjusted, i.e. for general sewing, the threads evenly meet between the two fabric layers. Your sewing machine electronically sets a thread tension for the selected stitch. Depending on the fabric, batting, thread etc, the tension may need to be adjusted. See page 42 for instructions on how to change the setting manually.

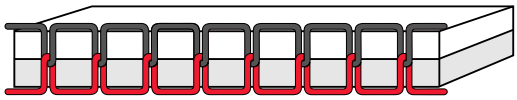

Correct tension

If the bobbin thread is visible on the top side of the fabric, the needle thread tension is too tight. Reduce the needle thread tension.

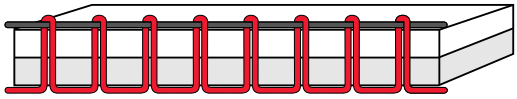

Tension too tight

If top thread is visible on the underside of the fabric, the needle thread tension is too loose. Increase the needle thread tension.

For decorative stitches and buttonholes, the top thread should be visible on the underside of the fabric.

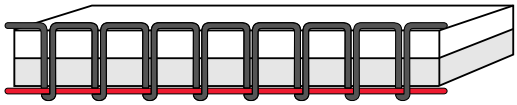

Tension too loose

Mirroring

To mirror end to end, touch the mirror end to end button. To mirror stitches or sequences side to side, touch the mirror side to side button.

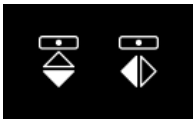

Left: mirror end to end button. Right: mirror side to side button.

Personal Stitch

Save Personal Stitch

Save your personal stitch in your machine by touching the save button. Adjustments in stitch length, width, density, elongation, mirroring and thread tension will be saved.

Note: Some special stitches, such as buttonholes, cannot be saved. A pop-up will inform you of this when you try to save such a stitch.

Overwrite Personal Stitch

If the memory is occupied, a pop-up message will appear asking if you wish to overwrite the previously saved stitch or sequence with the new one. Touch Yes or No button to make your choice.

Load Personal Stitch

Load your personal stitch by touching the load button.

Sequencing

The sequencing function on your machine makes it possible to combine stitches and letters into sequences. You can add up to 60 stitches and/or letters in a sequence. Save your sequence on your machine; reload and sew any time you like. All stitches in your sewing machine can be used for sequencing except for buttonholes, eyelet, darning stitch, button sewing and bar tack stitches (stitch numbers 32–45).

Sequencing - Overview

1. Stitch field
2. Stitch width/stitch positioning
3. Stitch length/density/elongation
4. Current stitch number
5. Sequencing tab

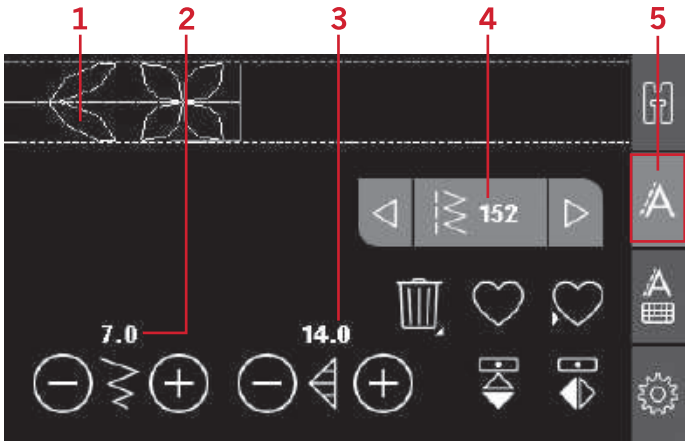

Create a Sequence

1. Touch the sequencing tab to enter sequencing.
2. Select the stitch you wish to use (see page 45 on how to select a stitch). The stitch will appear in the stitch field.

Note: The current position in the stitch field is marked by a cursor. Inserted stitches will be placed at the cursor position. Move the cursor through the sequence using the arrow buttons to the left and right of the stitch number field.

Using the Alphabet

Alphabet Mode, Sequencing- Overview

1. Stitch field
2. Alphabet
3. Alphabet sequencing tab
4. Character set (upper case/lower case, normal/ special symbols)
5. Font selection

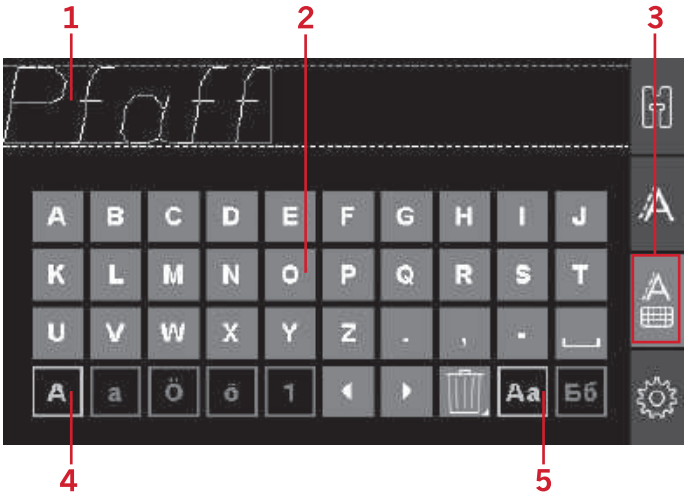

Create a Text Sequence

1. Touch the alphabet sequencing tab (3).
2. Move the cursor through the stitch field (1) with the left or right arrow buttons to where you want to add a letter.
3. Touch a letter from the alphabet (2) to insert it. It will be placed at the cursor position in the stitch field.

Note: The selected character set and font will be highlighted in green.

Select Character Set and Font

Touch the character set indicator (4) to change character set between upper or lower case, normal or special letters and symbols.

Touch the font indicator (5) to change fonts.

Adjust Text and Stitches

Touch the sequencing tab to enter sequence view. You can mirror, adjust length and width or change the density, elongation and stitch position of the selected stitch. The adjustments work just like in sewing mode. See page 44. When you have changed a value, the digits will be highlighted in green on the graphic display to show that the value is not default.

Note: The adjustments will only affect the stitch at the cursor position. If you return to sewing mode, all adjustments made there will affect the entire sequence and will not be saved you return to sequencing.

Delete a Stitch or Letter in a Sequence

If you want to delete a stitch, move the cursor to the stitch you want to delete and touch the delete button. To delete the entire sequence from the stitch field, long touch the delete button.

Manage Your Sequences

You can save and reload your sequence. The sequence memory has a space of 60 stitches and letters.

Save Sequence

Saving your sequence works just like in sewing mode. See page 44.

Note: If another sequence is already saved, a pop-up will appear asking if you wish to overwrite. Select yes or no to make your choice.

Load Sequence

Loading your sequence works just like in sewing mode, see page 44. To load your sequence, touch the load button.

Note: When loading a sequence into sewing mode, the value displayed for the sequence will be the letter M.

Sewing a sequence

You can sew the sequence by choosing one of these 3 options; return to sewing mode by selecting the sewing mode tab, press the start/stop button or simply step on the foot control. Your sequence is ready to be sewn out. The sequence will be sewn continuously. If you want to stop at the end of the sequence, press the thread snips while sewing. The machine will tie-off and cut the threads at the end of the sequence.

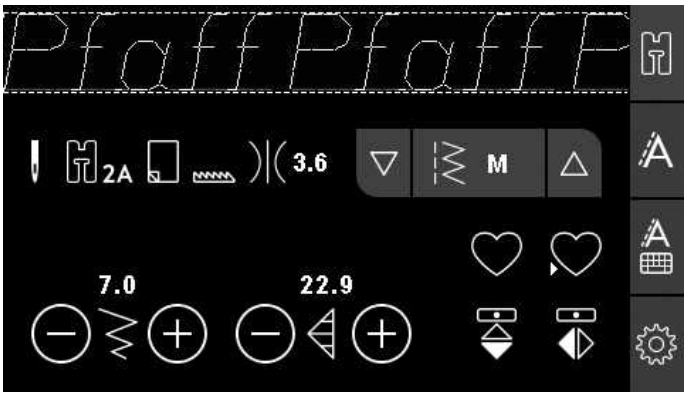

Note: You can stop at the end of the sequence without cutting the threads by using the tie-off function, see page 41.

Note: Adjustments made in sewing mode will affect the whole sequence. However, these adjustments will not be saved if you return to sequencing.

Sequencing Pop-Ups

This Stitch Cannot Be Added in a Sequence
This message is shown if you try to add a buttonhole, eyelet, bartack, darning stitch or the sew-on-button stitch (stitch numbers 32–45) to a sequence. All stitches in your sewing machine can be added in a sequence except for these. Close the pop-up message by touching the OK button.

This Stitch Cannot Be Saved
This message is shown if you try to save a buttonhole, eyelet, bartack, darning stitch or the sew-on-button stitch (stitch numbers 32–45) to the machine memory. All stitches in your machine can be saved except for these. Close the pop-up message by touching the OK button.

Sequence Out of Range
If you try to add more than 60 stitches or letters in the sequence this message is shown. Close the pop-up message by touching the OK button.

Delete All Stitches?
This pop-up message will ask you to confirm when you have chosen to delete an entire sequence in sequencing mode. Select yes or no to make your choice.

Overwrite?
If there is already a stitch or sequence saved in the machine memory and you press the save button this pop-up will appear asking if you wish to overwrite the previously saved stitch/sequence with the new one. Select yes or no to make your choice.

5 Sewing

Sewing Techniques

Three-Step Zigzag Stitch

Three-step zigzag stitch is used to overcast raw edges. Make sure the needle pierces the fabric on the left side and overcasts the edge on the right side. The stitch can also be used as an elastic stitch to allow seams to stretch when sewing knit fabrics.

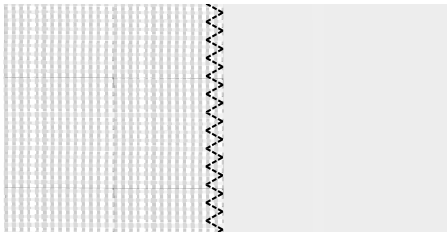

Three-step zigzag stitch

Buttonholes

Your machine's buttonholes are specially adjusted for different kinds of fabric and garments. Look at the stitch table on page 10 in this book to find descriptions of each buttonhole.

The fabric should be interfaced and/or stabilized where buttonholes are to be sewn.

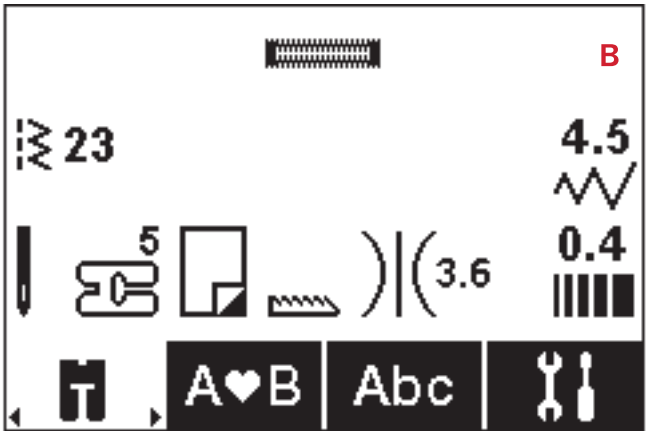

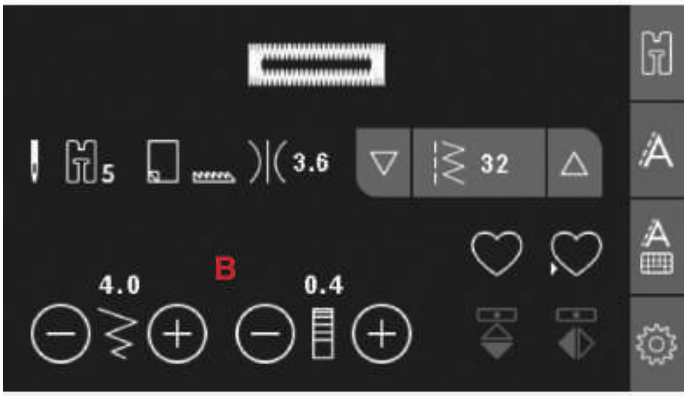

One Step Buttonhole Foot 5

1. Mark the position of the buttonhole on your project.
2. Attach buttonhole foot 5 and pull out the button holder plate (C). Insert the button. The button will determine the length of the buttonhole.
3. Make sure that the thread is pulled through the hole in the presser foot and placed under the foot.
4. Select the buttonhole you want to sew and adjust the width and density as desired (B).

   Note: Always sew a test buttonhole on a scrap piece of fabric.

5. Position your project under the presser foot so that the marking on the fabric is aligned with the center of the buttonhole foot.
6. Lower the buttonhole lever (A) all the way down.

   Note: The machine will not start to sew if the buttonhole lever is not lowered properly or the frame of buttonhole foot is not positioned all the way forward.

7. Hold the end of the upper thread and start sewing. The buttonholes are sewn from the front of the presser foot to the back.
8. Once the machine has sewn the buttonhole, raise the presser foot.

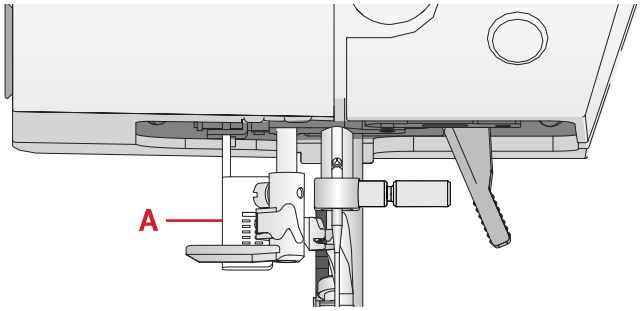

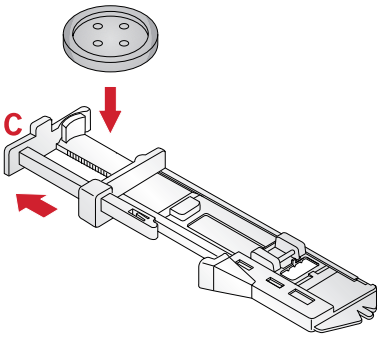

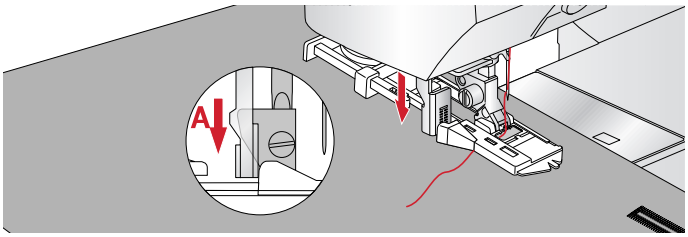

Corded Buttonhole

Corded buttonholes that are sewn with gimp threads are more stable, durable and have a professional appearance. Use pearl cotton or a regular gimp thread.

1. Loop a piece of heavy thread or pearl cotton over the plastic bar extending from the center back of the 5 one step buttonhole foot. Pull the thread tails under the foot, towards the front, then secure around the finger at the front of the foot.
2. Stitch a buttonhole. The satin buttonhole columns will stitch over the cord.
3. When the buttonhole is finished, lift the cord off the finger and pull out the slack.
4. Cross the cord in front of the needle and thread cord ends into a large needle, pull to the wrong side and knot ends before cutting excess.
5. Use the seam ripper to carefully open the buttonhole.

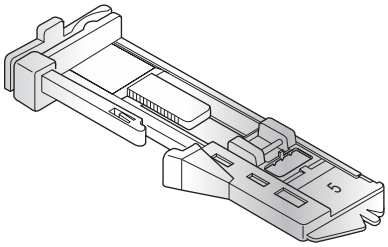

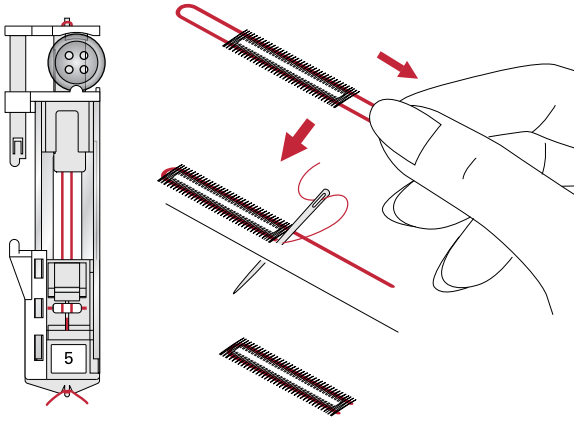

Sew On a Button

1. To sew on a button, remove the presser foot and select the button sewing stitch.
2. Lower the feed dogs.
3. Place the button under the presser foot holder. Use the mirroring function to make sure the holes in the button are aligned with the swing of the needle and the width is appropriate for the actual button. If necessary change the width between holes with the + and - buttons next to stitch width.
4. You can increase or decrease the number of stitches that will secure the button on the fabric in steps of two, using the + and - buttons.
5. Start to sew. The machine will sew the program for you and then tie-off and stop.

Note: Use the multi-purpose tool to create a thread shank for your button. You can also use a sew-on button foot, available as an optional accessory at your local authorized PFAFF® dealer.

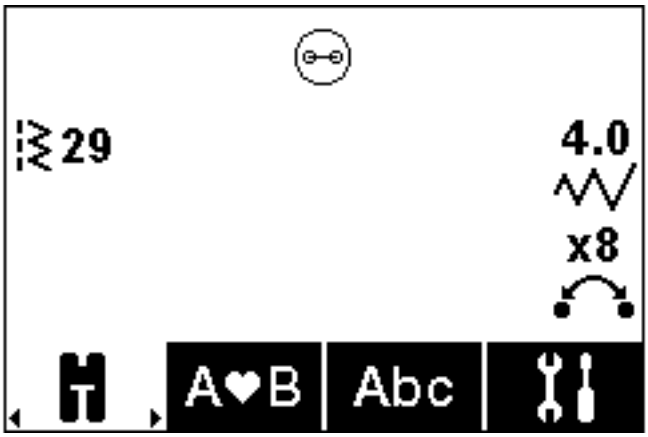

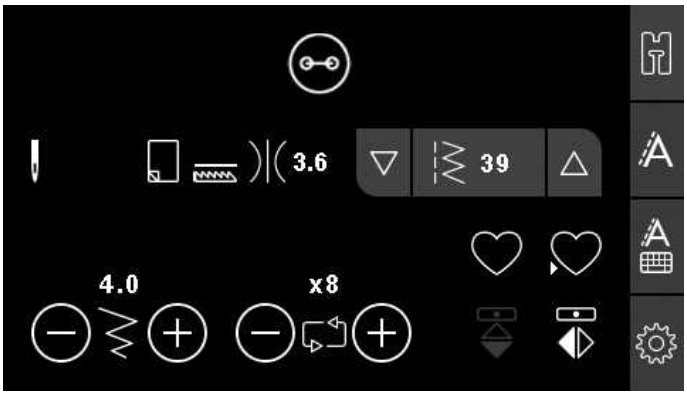

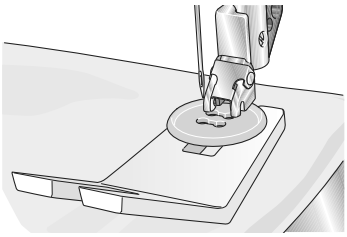

Darning

Darning a small hole or a tear before it becomes larger can save a garment. Choose a lightweight thread in a color as close to your garment as possible.

1. Place fabric or stabilizer in position under the hole or tear in your garment.
2. Select a darning stitch.
3. Start sewing above the hole and over it.
4. Once you have sewn across the hole, press the reverse button to set the length of the stitch. Your sewing machine will automatically complete the stitch.
5. By default, the machine will be set to repeat the same size darning square, just continue sewing.

   Re-select the darning stitch to deactivate repeat.

Note: The reverse button icon (1) will disappear, indicating that repeat is activated.

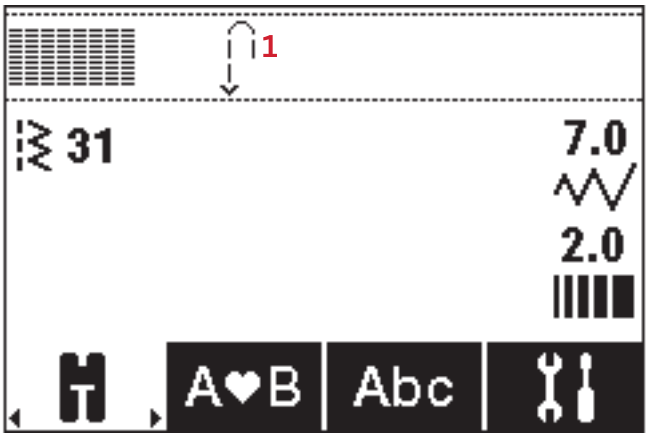

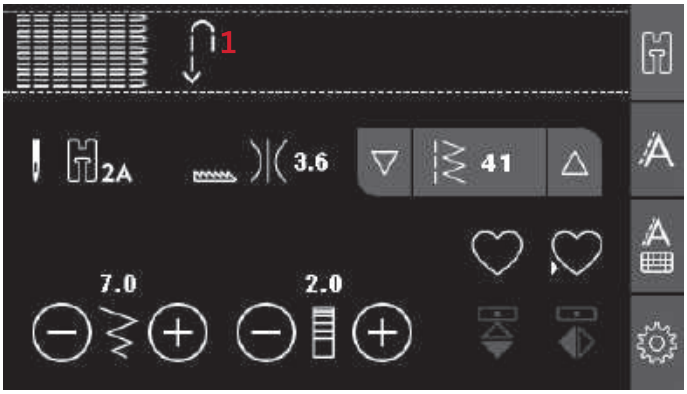

Sewing Hems in Heavy Fabric

When sewing over seams in extra heavy fabric or a blue jeans hem, the foot can tip as the machine climbs over the seam. Use the multi-purpose tool to balance the height of the presser foot as you sew. One side of the multi-purpose tool is thicker than the other. Use the side that suits the thickness of the seam best.

Engage the IDT™ system, see page 24. At the thickest point on the fabric, slow down the sewing speed.

Note: Increasing the stitch length may improve the sewing result when sewing hems in heavy fabric.

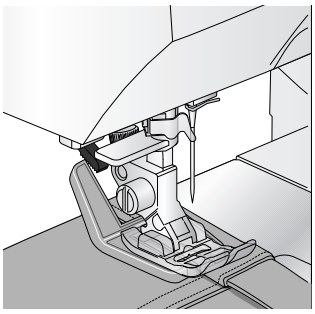

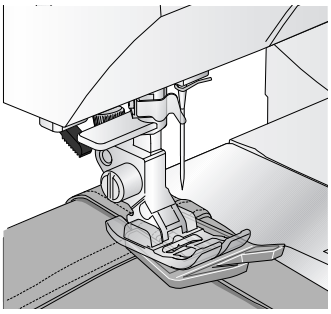

Handlook Quilting

A quilt usually consists of three layers, two layers of fabric with a layer of batting sandwiched between.

1. Baste the completed quilt top to the batting and backing.
2. Thread the needle with an invisible (monofilament) thread. Use needle size 90 and lightweight, soft cotton (60 wt or lighter) thread in the bobbin.
3. Select a quilt stitch and snap on the recommended foot shown in the sewing recommendations view.
4. Engage the IDT™ system.
5. When you sew the stitch you should only see your bobbin thread. You might need to adjust the thread tension depending on which fabric, thread and batting that is used. Make a few tests on a scrap piece of the fabric you are going to sew and check the tension.

Use the edge guide to sew successive rows. Loosen the upper screw of presser foot holder and insert edge guide into the hole. Set the space as you desire and tighten the screw.

620	35	36	37	38
630	46	48	49	50

Recommended stitches for a handlook quilt

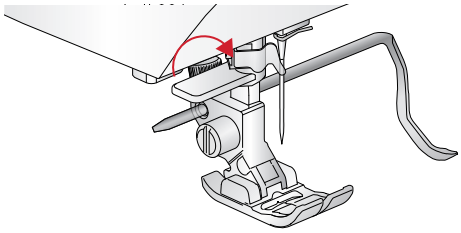

Free-Motion

For free-motion sewing lower the feed dogs on the back of the free arm. Attach the optional Open Toe Free-Motion foot. Move the fabric manually. Maintain a consistent speed and move the fabric in a smooth motion. You are creating the length of the stitch as you move the fabric.

Note: When the feed dogs are dropped, the fabric is no longer fed by the machine. You must move the fabric.

Free-Motion Stippling

Free-motion stippling adds texture and interest to your quilt, while keeping the layers together. Free-motion stippling is done with the feed dogs lowered. You move the fabric manually to determine the stitch length.

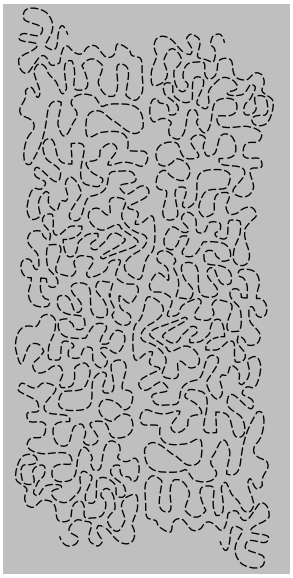

1. Set your sewing machine for free-motion sewing with a straight stitch.
2. Attach the optional Open Toe Free-Motion foot. Disengage the IDT™ system and lower the feed dogs.
3. Begin by pin basting your quilt through all layers with safety pins, starting from the center of your quilt and working out. Place a pin every 6-8 inches (15-20 cm).

   Note: Practice stippling on scraps of the fabric and batting from your quilt. It is important to move your hands at the same speed as the needle to prevent stitches that are too long or too short. Maintaining a consistent speed while free-motion sewing will also help keep stitches even.

4. Begin near the center of your quilt. Take one stitch and pull the bobbin thread to the top of the quilt. Take a few stitches right next to one another to lock the threads.
5. Plan a path for your stitching, then begin stitching your desired stipple pattern, moving the quilt as you go. The stitching should not cross over itself and should travel in a meandering motion.

Blindhem Stitch

The blindhem stitch is used to make invisible hems on skirts, trousers and home décor projects. Use foot number 3 with the IDT™ system.

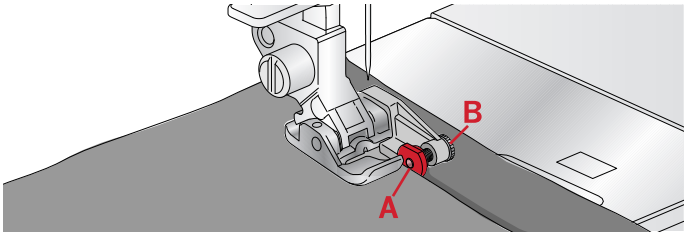

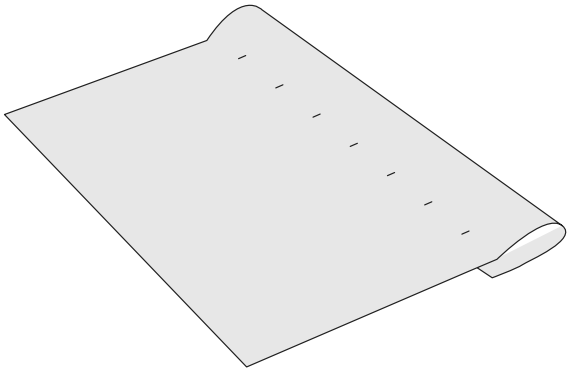

1. Finish the edge of the hem.
2. Fold and press the hem allowance to the wrong side.
3. Fold the hem back on itself so approximately 3/8" (1 cm) of the finished edge extends beyond the fold. The wrong side of your project should now be facing up.
4. Place the fabric under the presser foot so that the fold runs along edge guide (A).
5. When the needle swings into the fold it should catch a small amount of fabric. If the stitches are visible on the right side, adjust edge guide (A) by turning adjusting screw (B) until the stitch that catches the hem just barely shows.

Elastic Blindhem Stitch
The elastic blindhem stitch is especially suitable for stretchy fabrics, because the zigzag in the stitch lets the stitch stretch. The hem is finished and sewn at the same time. There is no need to finish the raw edge first on most knits.

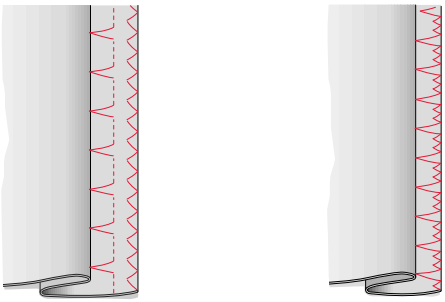

To the left: blindhem stitch.

To the right: elastic blindhem stitch.

Sewing in Zippers

There are different ways to sew in zippers. Follow the directions included with your pattern for best results. For all types of zippers it is important to sew close to the teeth of the zipper. The zipper foot 4 can be snapped to the presser foot bar on the left or right, depending on how you will insert your zipper. Then set the stitch position so that it enters close to the edge of the zipper teeth by using one of the 29 needle positions available for the straight stitch. If the presser foot is attached on the right side, the needle must only be moved to the right. If the foot is attached on the left, the needle must only be moved to the left.

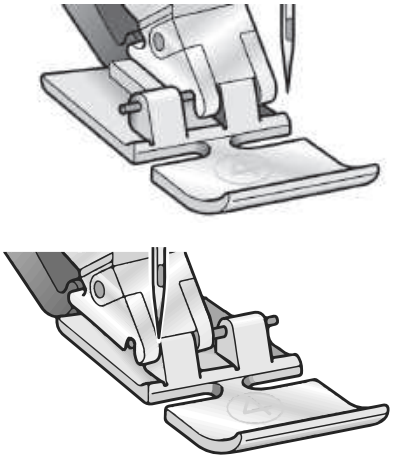

Sewing Pop-Ups

Raise Needle
Some functions are only possible with the needle raised. When trying to perform these functions with the needle lowered this pop-up message is shown. Raise the needle and press the OK button to close the pop-up message.

Please Lower the Presser Foot
Your machine will not sew if the presser foot is raised. Lower the presser foot and press the OK button to close the pop-up message.

Stitch Width Limited for Twin Needle
This message is shown when the machine is set for twin needle and you try to adjust the stitch width to wider than possible with the twin needle. Press the OK button to close the pop-up message.

This Stitch Cannot Be Combined With Twin Needle
This pop-up message appears when the machine is set for twin needle and you select a stitch that cannot be sewn with twin needle. Press the OK button to close the pop-up message.

This Stitch Cannot Be Sewn With Stitch Width Safety Active

This pop-up message appears when the machine is set for stitch width safety and you select a stitch that is wider than 0 mm. Press the OK button to close the pop-up message.

Machine Needs to Rest. Please Wait a Moment.

If the machine stops and this pop-up appears on the screen, the machine needs to rest. When the pop-up message closes you can resume sewing. The sewing results will not be affected.

Machine set for twin needle

This pop-up message appears when the twin needle is activated and you turn on your machine. Press the OK button to close the pop-up message.

Machine set for straight stitch

This pop-up message appears when the stitch width safety is activated and you turn on the machine. Press the pop-up message by pressing the OK button.

6 Maintenance

Cleaning the Machine

To keep your sewing machine operating well, clean it often. No lubrication (oiling) is needed. Wipe the exterior surface of your machine with a soft cloth to remove any dust or lint built up. Wipe the graphic display with a clean, soft and damp cloth.

Cleaning the Bobbin Area

⚠ *Lower the feed dogs and turn off the machine.*

Remove the presser foot. Push the bobbin cover release button (A) to the right and remove the bobbin cover (B) and the bobbin. Use the screwdriver for the needle plate to remove the two screws (C) in the needle plate. Lift up the needle plate. Clean the feed dogs and bobbin area with the brush included with the accessories.

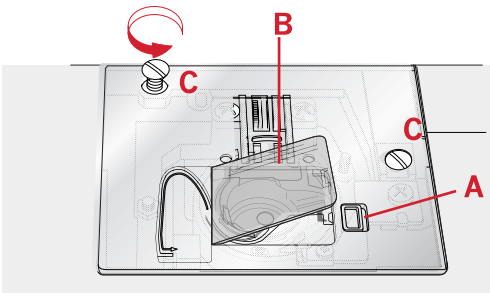

Cleaning Under the Bobbin Area

Clean the area under the bobbin case after sewing several projects or any time you notice an accumulation of lint in the bobbin case area. Remove the bobbin case by lifting it up. Clean the area with the brush or a dry cloth.

⚠ *Use caution when cleaning around the thread snips knife (B).*

Put the bobbin case in place so that the tip (A) fits into the stopper (C).

Note: Do not blow air into the bobbin case area. The dust and lint will be blown into your machine.

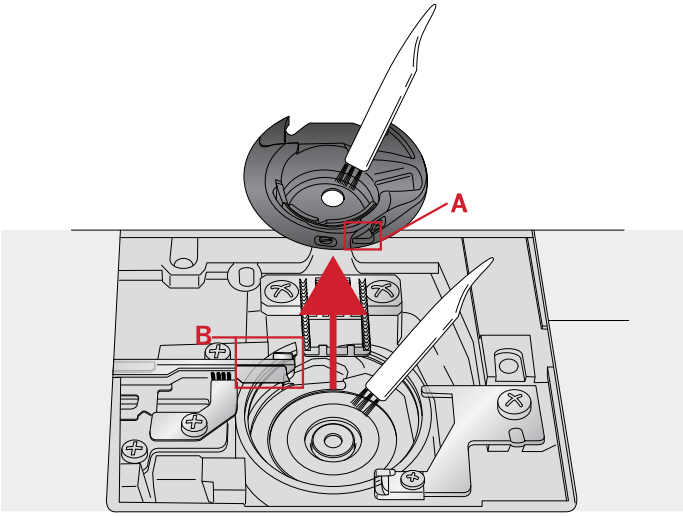

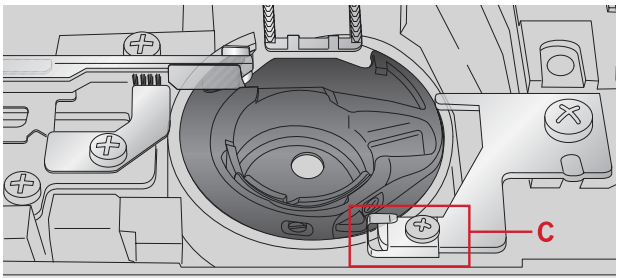

Replacing the Needle Plate

With the feed dogs lowered, replace the needle plate and insert and tighten the two needle plate screws.

Replace the bobbin cover.

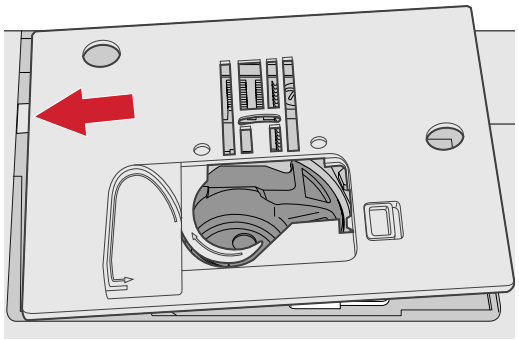

Troubleshooting

In this troubleshooting guide you will find solutions to the problems you may have with your machine. For further information please contact your local authorized PFAFF® dealer who will be happy to help you.

General Problems

Thread snips do not cut the thread?	Remove needle plate and clean lint from bobbin area.
Fabric does not move?	Make sure that the feed dogs are not lowered.
Wrong stitch, irregular or narrow stitch?	Deactivate twin needle or stitch width safety in the settings menu.
The needle breaks?	Insert needle correctly as described, see page 26. Attach correct needle for the fabric.
The machine will not sew?	Check that all plugs are securely plugged into the machine and into the wall socket. Check that the foot control cord is securely plugged into the front socket on the bottom right side of the machine. Push bobbin winder lever to sewing position.
The sewing machine function buttons do not respond to touch?	The sockets and function buttons on the machine can be sensitive to static electricity. If the buttons do not respond to touch, turn the machine OFF and then ON again. If the problem persists, contact your local authorized PFAFF® dealer.

The Machine Skips Stitches

Did you insert the needle properly?	Insert needle correctly as described, see page 26.
Did you insert a wrong needle?	Use needle system 130/705 H.
Is the needle bent or blunt?	Insert a new needle.
Did you thread the machine properly?	Check how the machine is threaded.
Is the correct presser foot used?	Attach correct presser foot.
Is the needle too small for the thread?	Make sure the needle is correct for the thread and fabric.

Needle Thread Breaks

Did you insert the needle properly?	Insert needle correctly as described, see page 26.
Did you insert a wrong needle?	Use needle system 130/705 H.

Is the needle bent or blunt?	Insert a new needle.
Did you thread the machine properly?	Check how the machine is threaded.
Is the needle too small for the thread?	Change the needle to the proper size for the thread.
Are you using poor thread with slubs or thread which has become dry?	Change to a new higher quality thread purchased from an authorized PFAFF® dealer.
Is a correct spool cap used?	Attach a spool cap of the right size for the actual thread spool.
Is the best spool pin position used?	Try a different spool pin position (vertical or horizontal).
Is the needle plate hole damaged?	Change the needle plate.

Bobbin Thread Breaks

Did you insert the bobbin properly?	Check the bobbin thread.
Is the needle plate hole damaged?	Change the needle plate.
Is the bobbin area clean?	Clean lint from bobbin area and use only the bobbins approved for this model.
Is the bobbin wound correctly?	Wind a new bobbin.

The Seam Has Uneven Stitches

Is the thread tension correct?	Check needle thread tension and the threading.
Are you using too thick or slubbed thread?	Change the thread.
Is the bobbin thread evenly wound?	Check bobbin winding.
Is a correct needle used?	Insert a proper needle correctly as described, see page 25.

The Machine Does Not Feed or Feeds Irregularly

Did you thread the machine properly?	Check how the machine is threaded.
Has sewing lint collected between the feed dogs?	Remove the needle plate and clean the feed dogs with a brush.
Are the feed dogs raised?	Raise the feed dogs.

Unable To Sew a Buttonhole

Machine beeps when using the One step buttonhole foot 5 ?	Make sure the accessory tray is attached to the machine and the buttonhole lever is lowered all the way down. Lower the presser foot gently.

Have your sewing machine serviced regularly by your local authorized PFAFF® **dealer!**

If you have followed this trouble shooting information and still have problems, take your sewing machine to your dealer. If there is a specific problem, it is a great help to test sew with your thread on a scrap of your sewing fabric and bring it to your dealer. A sewing sample will often give much better information than words.

Non-original parts and accessories

The warranty does not cover any defect or damage caused by use of non-original accessories or parts.

Technical specification

Sewing machine

Rated voltage	100–240V ~ 50–60Hz
Nominal consumption	55W
Light	LED
Sewing speed	800 rpm maximum
Machine dimensions: Length (mm) Width (mm) Height (mm) Net weight (kg)	 480 193 300 8.8

Foot control

Model	C-9000
Rated voltage	DC 15V, max. 3mA

- The technical specifications and this owner's manual can be changed without prior notice.

A

Accessories 8
Accessory Tray 8
Adjust Text and Stitches 38, 49
Alphabet Mode, Sequencing 37, 48
Alphabets 15
Alt Button 29
Attach Presser Foot 27
Audible Alarm 31, 43
Auxiliary Spool Pin 19

B

basting 57
Blindhem Stitch 57
Block 15
Bobbin Thread Breaks 62
Bobbin Winding 22
Buttonholes 52

C

Calibrate Touch Screen 43
Changing the Needle 26
Changing the Presser Foot 27
Cleaning the Bobbin Area 60
Cleaning the Machine 60
Cleaning Under the Bobbin Area 60
Connect the Power Cord and Foot Control 17
Contrast 31
Corded Buttonhole 53
Create a Sequence 37, 48
Create a Text Sequence 37, 48
Cursor Buttons 29
Cyrillic 15

D

Darning 55
Decorative Stitches 14
Delete a Stitch or Letter in a Sequence 38, 49
Delete Button 29
Direct Selection Buttons 29
Disengaging the IDT™ System 24

E

Elastic Blindhem Stitch 58
Elongation 35, 46
Engaging the IDT™ System 24

F

Free Arm 18
Front 6

G

General Problems 61
Graphic Display 28, 41

H

Handlook Quilting 56
Horizontal Position 18

I

IDT™ system 24, 33, 44, 55
Info Button 29
Inserting the Bobbin 23

L

Language 31, 43
LED Lights 17
Load Button 29
Load Personal Stitch 36, 47
Load Sequence 39, 50
Lowering Feed Dogs 26

M

Machine Overview 6
Maintenance 60
Manage Your Sequences 39, 50
Mirror End to End Button 29
Mirror Side to Side Button 29
Mirroring 35, 47
Mounting Machine in Sewing Cabinet 18

N

Needle Art Stitches 13
Needle Stop Up/Down Button with Indicator 28, 41
Needle Thread Breaks 61
Needle Threader 20
Needles 25

O

OK Button 29
One Step Buttonhole Foot 5 53
Operating your **ambition™ 620** 28
Operating your **quilt ambition™ 630** 41
Optional Feet Stitches 15
Overwrite Personal Stitch 36, 47

P

Pack Away After Sewing 17
Personal Stitch 36, 47
Presser Feet 9
Presser Foot Lift 26
Presser Foot Pressure 26

Q

Quilt Stitches 13

R

Rear Side 7
Recommended stitches for a handlook quilt 56
Remove Presser Foot 27
Replacing the Needle Plate 61
Reverse Button with Indicator 29, 42

S

Satin Stitches 13
Save Personal Stitch or Sequence button 29
Save Sequence 39, 50
Select a Stitch 32, 45
Select Character Set and Font 37, 48
Sequencing 36, 47
Settings Menu 30, 42
Sew On a Button 54
Sewing 52
Sewing a sequence 39, 50
Sewing Hems in Heavy Fabric 55
Sewing in Zippers 58
Sewing Mode 32, 44
Sewing Pop-Ups 58
Sewing Recommendations 33
Sewing Techniques 52
Software Version 31
Speed Control Lever 29, 42
Spool Pins 18
Start/Stop Button 29, 42
Stitch Adjustments 34, 45
Stitch Length/Stitch Density 29, 34, 46
Stitch Overview 10
Stitch Width Safety 31, 43
Stitch Width/Stitch Positioning 29, 34, 45

T

The Machine Does Not Feed or Feeds Irregularly 62
The Machine Skips Stitches 61
The Seam Has Uneven Stitches 62
Thread Cutter 18
Thread Snips Button with Indicator 29, 41
Thread Tension 30, 35, 42, 46
Threading for Twin Needle 21
Threading the Machine 20
Three-Step Zigzag Stitch 52
Tie-off Button with Indicator 28, 41
Top Parts 7
Troubleshooting 61
Twin Needle 30, 42

U

Unable To Sew a Buttonhole 62
Unpacking 16
Using the Alphabet 37, 48
Utility Stitches 10

V

Vertical Position 19

W

Wheel Buttons 29
Winding From Horizontal Position 22
Winding Through the Needle 23

You have purchased a modern sewing machine. Consult your local Authorized PFAFF® retailer, and be sure to visit our website at www.pfaff.com for the latest updates of the User's Guide.

We reserve the right to change the machine equipment and the assortment of accessories without prior notice, or make modifications to the performance or design. Such modifications, however, will always be to the benefit of the user and the product.

INTELLECTUAL PROPERTY

AMBITION, IDT, PFAFF, QUILT AMBITION, and PERFECTION STARTS HERE are trademarks of Singer Sourcing Limited LLC. © 2018 Singer Sourcing Limited LLC. All rights reserved.

Please note that on disposal, this product must be safely recycled in accordance with relevant National legislation relating to electrical/ electronic products. Do not dispose of electrical appliances as unsorted municipal waste, use separate collection facilities. Contact your local government for information regarding the collection systems available. When replacing old appliances with new ones, the retailer may be legally obligated to take back your old appliance for disposal free of charge.

If electrical appliances are disposed of in landfills or dumps, hazardous substances can leak into the groundwater and get into the food chain, damaging your health and well-being.

Manufacturer
VSM GROUP AB
Drottninggatan 2, SE-56184, Huskvarna, SWEDEN

PFAFF

Perfection starts here.™

www.pfaff.com

4710496-26A · © 2018 Singer Sourcing Limited LLC · All rights reserved