PFAFF

Perfection starts here.™

expression™ line

User's Guide

www.sewshop.eu

This household sewing machine is designed to comply with IEC/EN 60335-2-28 and UL1594.

IMPORTANT SAFETY INSTRUCTIONS

When using an electrical appliance, basic safety precautions should always be followed, including the following:
Read all instructions before using this household sewing machine. Keep the instructions at a suitable place close to the machine. Make sure to hand them over if the machine is given to a third party.

DANGER – To reduce the risk of electric shock:

- A sewing machine should never be left unattended when plugged in. The electrical socket, to which the machine is plugged in should be easily accessible. Always unplug this sewing machine from the electric outlet immediately after using and before cleaning, removing covers, lubricating or when making any other user servicing adjustments mentioned in the instruction manual.

WARNING – To reduce the risk of burns, fire, electric shock, or injury to person:

- Do not allow to be used as a toy. Close attention is neccesary when this sewing machine is used by or near children.
- Use this sewing machine only for its intended use as described in this manual. Use only attachments recommended by the manufacturer as contained in this manual.
- Never operate this sewing machine if it has a damaged cord or plug, if it is not working properly, if it has been dropped or damaged, or dropped into water. Return the sewing machine to the nearest authorized dealer or service center for examination, repair, electrical or mechanical adjustment.
- Never operate the sewing machine with any air openings blocked. Keep ventilation openings of the sewing machine and foot control free from the accumulation of lint, dust, and loose cloth.
- Keep fingers away from all moving parts. Special care is required around the sewing machine needle.
- Always use the proper needle plate. The wrong plate can cause the needle to break.
- Do not use bent needles.
- Do not pull or push fabric while stitching. It may deflect the needle causing it to break.
- Wear safety glasses.
- Switch the sewing machine off (“0”) when making any adjustment in the needle area, such as threading needle, changing needle, threading bobbin, or changing presser foot, etc.
- Never drop or insert any object into any opening.
- Do not use outdoors.
- Do not operate where aerosol (spray) products are being used or where oxygen is being administrated.
- To disconnect, turn all controls to the off (“0”) position, then remove plug from outlet.
- Do not unplug by pulling on cord. To unplug, grasp the plug, not the cord.
- The foot control is used to operate the machine. Avoid placing other objects on the foot control.
- Do not use the machine if it is wet.
- If the LED lamp is damaged or broken, it must be replaced by the manufacturer or it's service agent or a similarly qualified person, in order to avoid a hazard.
- If the supply cord connected with the foot control is damaged, it must be replaced by the manufacturer or its service agent or a similarly qualified person, in order to avoid a hazard.
- This sewing machine is provided with double insulation. Use only identical replacement parts. See instructions for Servicing of Double-Insulated Appliances.

www.sewshop.eu

SAVE THESE INSTRUCTIONS

FOR CENELEC COUNTRIES ONLY:
This appliance can be used by children aged from 8 years and above and persons with reduced physical, sensory or mental capabilities or lack of experience and knowledge if they have been given supervision or instruction concerning use of the appliance in a safe way and understand the hazards involved. Children shall not play with the appliance. Cleaning and user maintenance shall not be made by children without supervision.
The noise level under normal operating conditions is less than 75dB(A).
The machine must only be used with foot control of type "FR5" manufactured by Shanghai Binao Precision Mould Co., Ltd.

FOR NON CENELEC COUNTRIES:
This sewing machine is not intended for use by persons (including children) with reduced physical, sensory or mental capabilities, or lack of experience and knowledge, unless they have been given supervision or instruction concerning use of the sewing machine by a person responsible for their safety. Children should be supervised to ensure that they do not play with the sewing machine.
The noise level under normal operating conditions is less than 75dB(A).
The machine must only be used with foot control of type "FR5" manufactured by Shanghai Binao Precision Mould Co., Ltd.

SERVICING OF DOUBLE INSULATED PRODUCTS

In a double-insulated product, two systems of insulation are provided instead of grounding. No ground means is provided on a double-insulated product, nor should a means for grounding be added to the product. Servicing of a double-insulated product requires extreme care and knowledge of the system and should be done only by qualified service personnel. Replacement parts for a double-insulated product must be identical to those parts in the product. A double-insulated product is marked with the words ‘DOUBLE INSULATION’ or ‘DOUBLE INSULATED’.

www.sewshop.eu

Congratulations!

Congratulations on purchasing your new PFAFF®
sewing machine.

As a sewing enthusiast, you have acquired one of the most advanced and comprehensive sewing and embroidery machines in the world; it will enable you to transform all your creative ideas into reality using the most highly tuned technology and features.

Before you start, please spend some time reading this owner's manual. You will soon discover how to maximize the use of your machine. Our authorized PFAFF® dealers will of course also be pleased to advise you at any time.

Your PFAFF® sewing machine will definitely enable you to experience a totally new dimension of sewing.

www.sewshop.eu

TABLE OF CONTENTS

1

Introduction 7

Machine overview 1:8
- Front side 1:8
- Rear side 1:9
- Top parts 1:9
- Accessory tray 1:9

Included accessories 1:10
- Presser feet 1:11

Stitch overview 1:12
- Utility stitches 1:12
- Decorative stitches (720) 1:14
- Decorative stitches (710) 1:17
- Alphabets 1:19

2

Preparations 2:1

Unpacking 2:2
Connecting the foot control cord 2:2
Connect the power cord and foot control 2:2
Pack away after sewing 2:3
LED lights 2:3
Free arm 2:3
Thread cutter 2:3
Electronic knee-lift (720) 2:3
Spool pins 2:4
Threading the machine 2:5
- Needle threader 2:5

Thread sensor 2:6
Bobbin winding 2:7
Inserting the bobbin 2:8
IDT™ system (Integrated Dual Feed) 2:8
Changing the presser foot 2:9
Changing the needle 2:9
Change to straight stitch needle plate 2:9
Lowering feed dogs (710) 2:10
Needles 2:10
Threads 2:11
Stabilizers 2:11
USB port 2:12
How to update your machine 2:12

3

Machine settings & buttons 3:1

Touch screen 3:2
- Touch screen - overview 3:2

Settings menu 3:3
- Machine settings 3:3
- Sewing settings 3:4

Machine information 3:5
Common icons 3:5
Buttons and indicators 3:6

4

Sewing mode 4:1

Sewing mode 4:2
- Start view 4:2

Sewing mode - overview 4:2
Selection menu 4:3
- Selecting a stitch 4:3
- Selecting a font 4:3

Stitch settings 4:4
- Stitch width 4:4
- Stitch positioning 4:4
- Stitch length 4:5
- Stitch density 4:5
- Balance 4:5
- Thread tension 4:6
- Mirroring 4:6

Save to personal menu 4:7
Free-motion options (720) 4:8
Tie-off options 4:10
Sewing programs 4:11
Sequencing 4:12
Stitch Creator™ feature (720) 4:12
Sewing techniques 4:13
- Sewing in zippers 4:13
- Sewing hems in heavy fabric 4:13
- Three-step zigzag stitch 4:14
- Blindhem stitch 4:14
- Buttonholes 4:15
- Sew on a button 4:17
- Darning 4:17
- Quilting 4:18

Special sewing techniques 4:20
- Stacking stitches (720) 4:21
- Single ribbon stitches (720) 4:21
- Double ribbon stitches (720) 4:22
- Triple ribbon stitches (720) 4:23

Common sewing pop-ups 4:24

www.sewshop.eu

5

Sequencing 5:1

Sequencing 5:2
Sequencing - overview 5:2
Open and exit sequencing 5:3
Create a sequence 5:3
Sequence commands 5:4
Loading and sewing a sequence 5:5
Saving a sequence 5:5
Important sequencing information 5:6
Common sequencing pop-ups 5:6

6

Stitch Creator™ Feature 6:1

Stitch Creator™ feature 6:2
Stitch Creator™ feature - overview 6:2
Open and exit Stitch Creator™ feature 6:3
Definition of a stitch point 6:3
Start creating - add a stitch or stitch point 6:3
Select stitch points 6:3
Duplicate selected stitch point 6:4
Insert a new stitch point 6:4
Triple stitch 6:4
Mirroring side to side 6:4
Mirroring end to end 6:4
Delete selected stitch point 6:4
Touch functions 6:5
Position of the marked stitch point 6:5
Loading and sewing a stitch 6:6
Saving a stitch 6:6
Common Stitch Creator™ feature pop-ups 6:6

7

Personal files 7:1

Personal files 7:2
Browse personal files 7:3
Open a folder 7:3
Move up one folder level 7:3
Organize 7:4
Common personal files pop-ups 7:4

8

Maintenance 8:1

Cleaning the machine 8:2
Non-original parts and accessories 8:2
Troubleshooting 8:3
Index 8:5
Intellectual Property 8:9

www.sewshop.eu

Note: The machine models will be referred to as their full name or simply as 720 and 710 in this manual.

Introduction 1

www.sewshop.eu

Machine overview

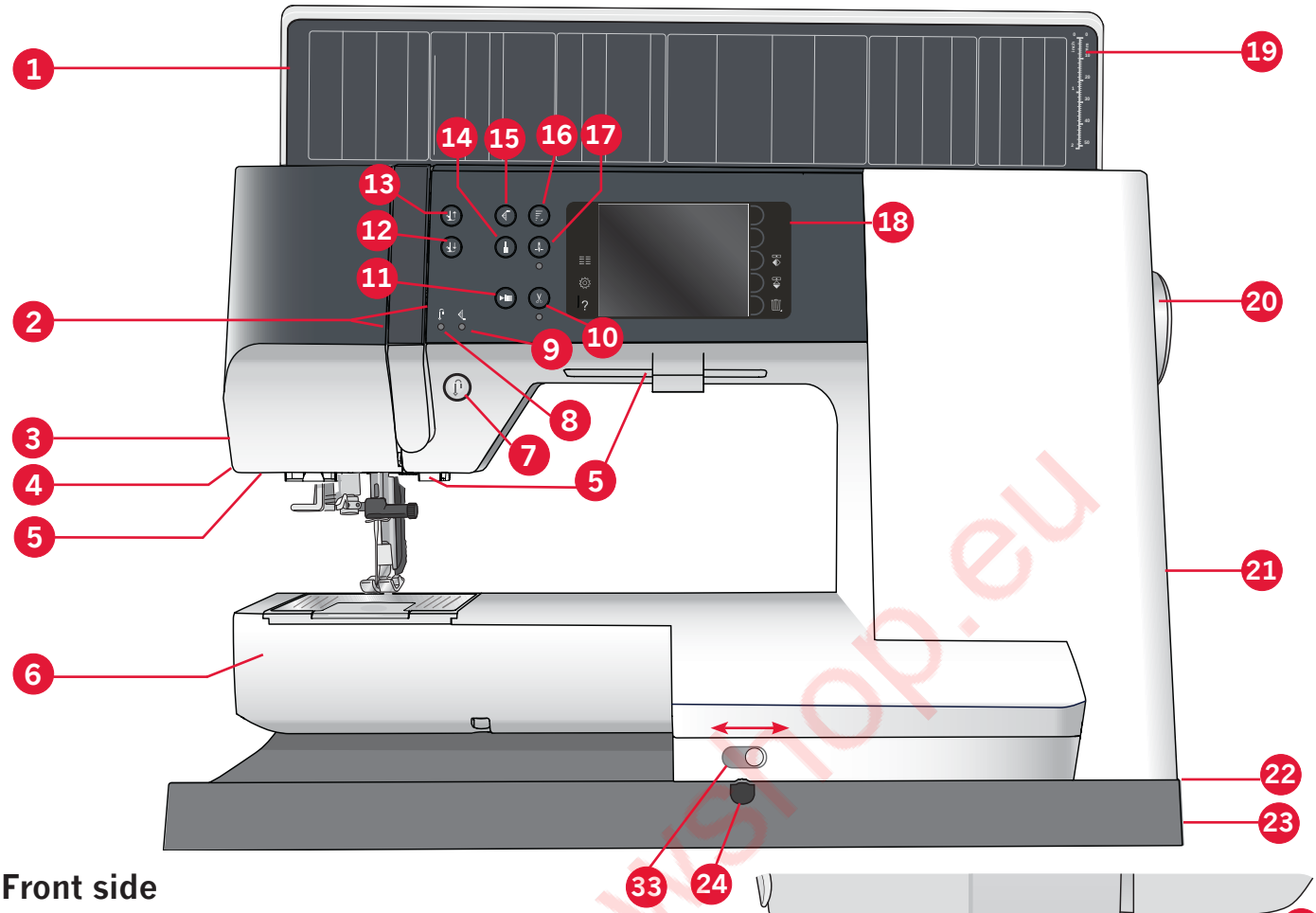

Front side

1. Lid with stitch categories
2. Threading slots
3. Thread cutter
4. Sensormatic buttonhole foot socket
5. LED lights
6. Free arm
7. Reverse
8. Reverse indicator
9. Action indicator
10. Thread snips
11. Start/stop
12. Presser foot down and pivot toggle
13. Presser foot up and extra lift toggle
14. Immediate tie-off
15. Stitch restart
16. Speed control
17. Needle up/down
18. PFAFF® Color Touch Screen
19. Button ruler
20. Handwheel
21. Stylus holder
22. Built-in USB port
23. Main switch, connectors for power cord and foot control
24. Connection for knee-lift (720)

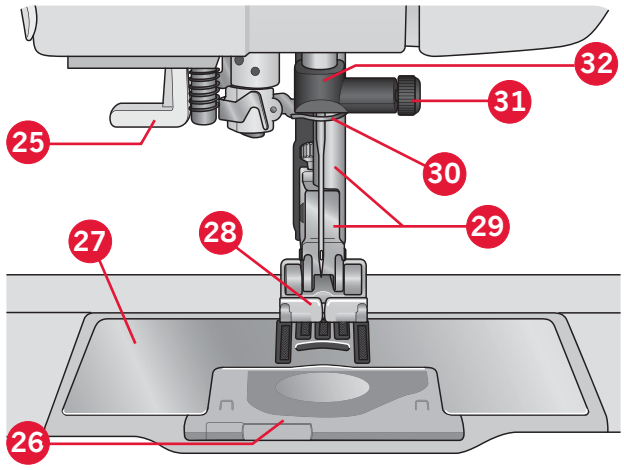

Needle area

25. Built-in needle threader
26. Bobbin cover
27. Needle plate
28. Presser foot
29. Presser foot bar and presser foot holder
30. Needle thread guide
31. Needle screw
32. Needle bar
33. Lowering feed dogs (710)

www.sewshop.eu

Rear side

34. Handle
35. IDT™ system

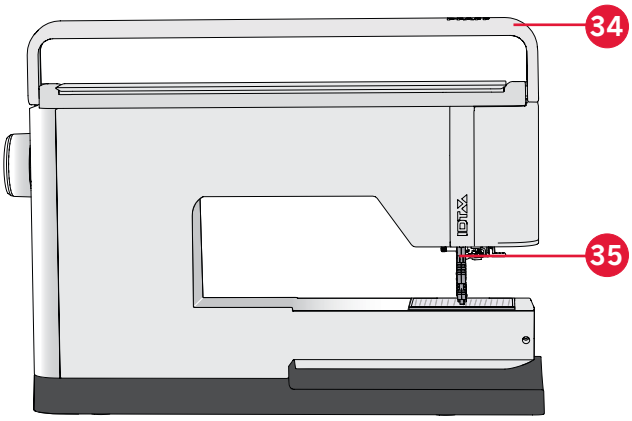

Top parts

36. Pre-tension disk for threading and bobbin winding
37. Bobbin winder thread guide
38. Thread guide
39. Bobbin winder thread guides
40. Bobbin winder thread cutter
41. Bobbin winder spindle
42. Auxiliary spool pin
43. Spool caps
44. Spool pin
45. Thread tension disk
46. Take-up lever

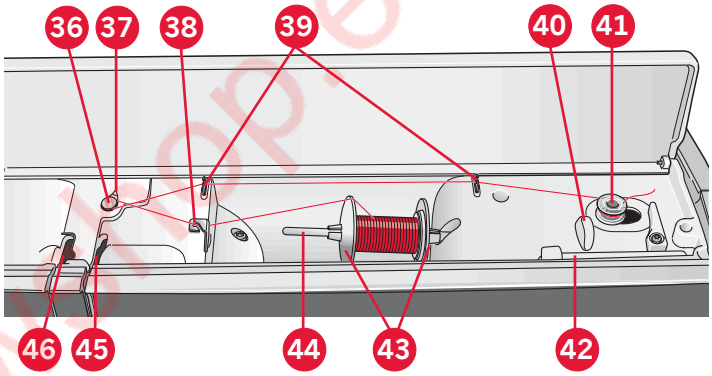

www.sewshop.eu

Accessory tray

The accessory tray features special compartments for presser feet and bobbins, plus space for needles and other accessories. Store the accessories in the tray so they are easily accessible.

47. Space for accessories
48. Removable tray for presser feet
49. Removable bobbin holder

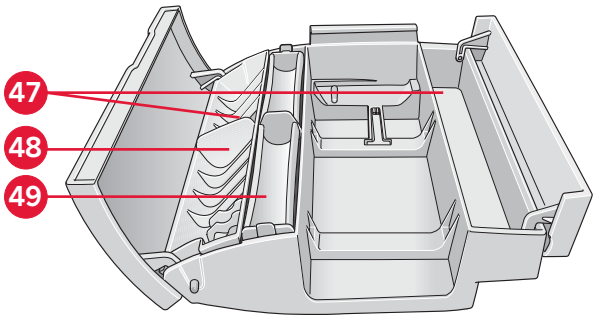

Included accessories

Accessories

50. Stylus
51. Thread net (1)
52. Edge guide
53. Felt pad (1)
54. Screwdriver
55. Seam ripper
56. Brush
57. Spool cap, large (2)
58. Spool cap, medium
59. Spool cap, small
60. Multi-purpose tool
61. Bobbins (5)
62. Knee-lift (720)
63. Straight stitch needle plate

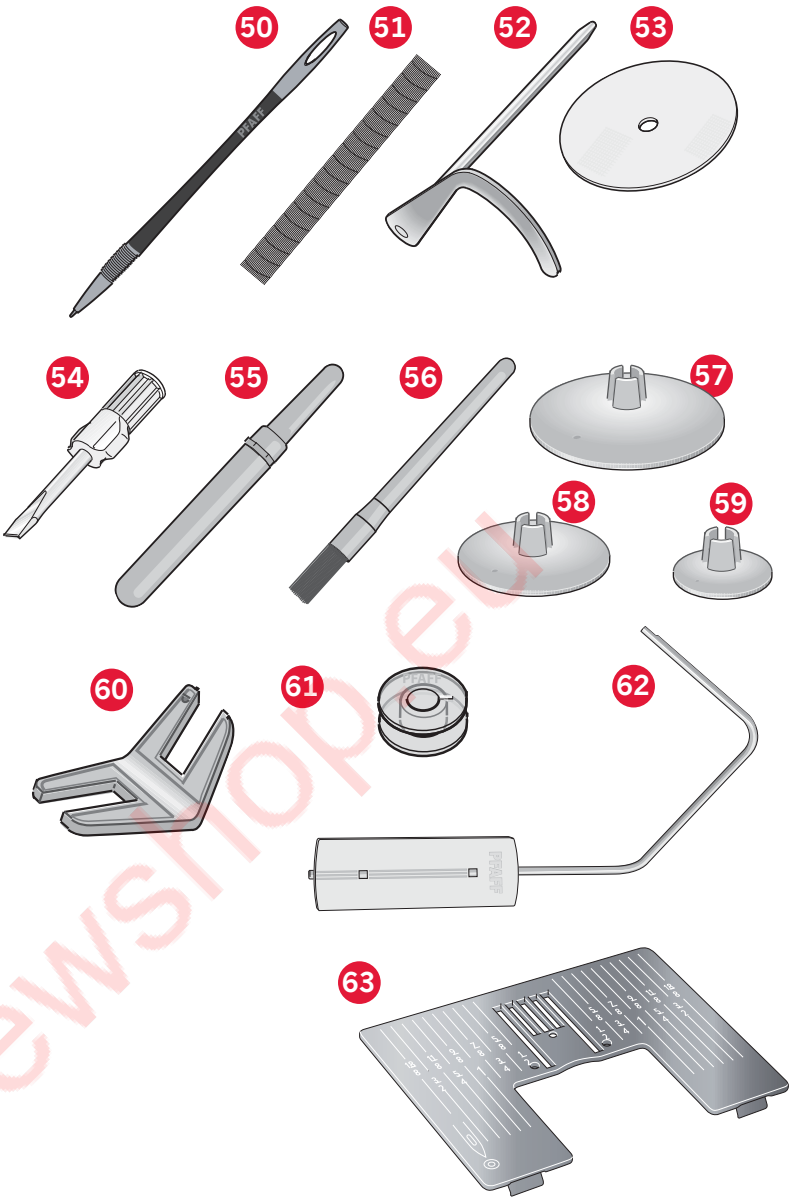

Included accessories not in picture

- Foot control
- Power cord
- Needles

www.sewshop.eu

Presser feet

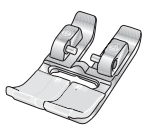

0A - Standard presser foot for IDT™ system (attached on the machine upon delivery)

This foot is used mainly for straight stitching and zigzag stitching with a stitch length longer than 1.0mm.

1A - Fancy stitch foot for IDT™ system

This foot is used for decorative stitches. The groove on the underside of the foot is designed to flow smoothly over the stitches.

2A - Fancy stitch foot

When sewing decorative stitches or short zigzag stitches and other utility stitches with less than 1.0mm stitch length, use this foot. The groove on the underside of the foot is designed to flow smoothly over the stitches.

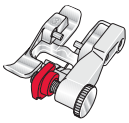

3 - Blindhem foot for IDT™ system

This foot is used for blindhem stitches. The toe on the foot guides the fabric. The red guide on the foot is designed to ride along the fold of the hem edge.

4 - Zipper foot for IDT™ system

This foot can be snapped on either the right or the left of the needle, making it easy to sew close to both sides of the zipper teeth. Move needle position to right or left to sew closer to zipper teeth.

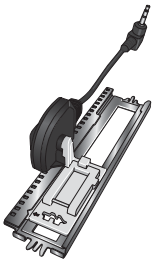

5A - Sensormatic buttonhole foot

When connected to the machine, the buttonhole is sewn in the length that has been entered into the machine.

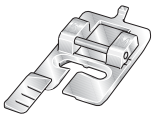

5M - Manual buttonhole foot

This foot is used for sewing manual buttonholes. Use the markings on the foot to position the garment edge. The finger on the back of the foot holds cording for corded buttonhole.

6A - Embroidery/Sensormatic free-motion foot

This foot is used for embroidery and free-motion sewing. This foot can also be used for darning.

1/4” quilting foot for IDT™ system

This foot is perfect for piecing and patchwork, especially when used in conjunction with the straight stitch needle plate. The distance from the needle to the outer edge of the right toe is 1/4” (6mm). The distance from the needle to the inner edge of the right toe is 1/8” (3mm).

8 - Maxi-stitch foot (720)

This foot is used for side-motion stitches.

Important: Make sure that the IDT™ system is disengaged when using presser foot 2A, 5A, 5M, 6A and 8.

www.sewshop.eu

Stitch overview

Utility stitches

Stitch	Stitch number (710)	Stitch number (720)	Name	Description
	1.1.1	1.1.1	Straight stitch	For seaming and topstitching. Select from 37 different needle positions. *Note: This stitch makes a stronger tie-off than stitch 2.1.1.*
	1.1.2	1.1.2	Stretch triple straight stitch	Reinforced seam. Topstitching.
	1.1.3	1.1.3	Stretch tricot stitch	For sewing seams on stretch fabrics.
	1.1.4	1.1.4	Basting stitch	Single stitch used for basting. Touch foot control to sew one stitch. Move fabric manually to desired position and touch foot control again to sew another stitch.
	1.1.5	1.1.5	Zigzag stitch	Reinforce seams, clean finish and stretch sewing.
	1.1.6	1.1.6	Stretch triple zigzag stitch	Elastic stitch for decorative hems or topstitching.
	1.1.7	1.1.7	Three-step zigzag stitch	Sewing elastic, darning, patching and decorative sewing.
	1.1.8	1.1.8	Elastic stitch	Sewing elastic, darning, patching and lace insertion.
	1.1.9	1.1.9	Z-zigzag stitch	Applique, couching, eyelets.
	1.1.10	1.1.10	Honeycomb stitch	Decorative stitch for stretch fabrics and hems. Also used with elastic thread in the bobbin.
	1.1.11	1.1.11	Bridging stitch	Joining fabrics and quilt batting, decorative stitch for quilting, hemstitching.
	1.1.12	1.1.12	Foundation elastic stitch	Joining stitch for undergarments, terry cloth, leather, bulky fabrics where overlapping the seams.
	1.1.13	1.1.13	Crosshem stitch	Elastic decorative hem for stretch fabrics. Also suitable for joining fabrics and quilt batting.
	1.1.14	1.1.14	Blindhem stitch	Sewing blindhems on woven fabrics.
	1.1.15	1.1.15	Elastic blindhem stitch	Sewing blindhems on stretch fabrics.
	1.2.1	1.2.1	Closed overlock	Seam and overcast stretch fabrics in one step.
	1.2.2	1.2.2	Elastic overcast	Seam and overcast stretch fabrics in one step.
	1.2.3	1.2.3	Overlock	Seam and overcast stretch fabrics in one step.
	1.2.4	1.2.4	Light knit fabric patching	For patching and sewing hems in stretch fabrics.

www.sewshop.eu

	1.2.5	1.2.5	Closed overlock	Seam and overcast in one step, patch, hem.
	1.2.6	1.2.6	Compensed closed overlock	For patching, sewing hems, sewing seams and overcasting in stretch fabrics.
	1.2.7	1.2.7	Mock cover hem	Create the look of a serger cover hem for stretch fabrics.
	N.A	1.2.8	Mock cover hem	Create the look of a serger cover hem for stretch fabrics.
	1.2.8	1.2.9	Open overlock blindhem	Create decorative overlock blindhem for woven fabrics.
	1.2.9	1.2.10	Closed overlock blindhem	Create decorative overlock blindhem for stretch fabrics.
	1.3.1	1.3.1	Standard buttonhole	Basic buttonhole for blouses, shirts and jackets. Also for pillowcases.
	1.3.2	1.3.2	Rounded buttonhole with crosswise tack	Buttonhole for garments.
	1.3.3	1.3.3	Eyelet buttonhole with pointed tack	Tailors buttonhole or decorative buttonhole.
	1.3.4	1.3.4	Rounded buttonhole	Buttonhole for light garments or jackets.
	1.3.5	1.3.5	Stretch buttonhole	Buttonhole for stretch fabrics.
	1.3.6	1.3.6	Decorative eyelet buttonhole	Decorative buttonhole for jackets.
	N.A	1.3.7	Decorative eyelet buttonhole	Decorative buttonhole for jackets.
	N.A	1.3.8	Heirloom eyelet buttonhole	Decorative heirloom buttonhole.
	1.3.7	1.3.9	Heirloom eyelet buttonhole	Decorative heirloom buttonhole.
	1.3.8	1.3.10	Button sewing	Sew on buttons or tacking.
	1.3.9	1.3.11	Bound buttonhole	Foundation stitch for bound buttonhole.
	1.4.1	1.4.1	Eyelet	For belts, laces, heirloom sewing, etc.
	1.4.2	1.4.2	Decorative eyelet	For belts, laces, heirloom sewing, etc.

www.sewshop.eu

	N.A	1.4.3	Decorative eyelet	Decorative eyelet for heirloom sewing.
	1.4.3	1.4.4	Decorative eyelet	For belts, laces, heirloom sewing, etc.
	1.4.4	1.4.5	Programmable darning stitch	To darn or mend small holes, begin stitching over hole, touch reverse for continuous darning and stop.
	1.4.5	1.4.6	Programmable reinforced darning stitch	Darn and mend work clothes, jeans, table cloths and linen towels. Stitch over hole, touch reverse for continuous darning and auto stop.
	1.4.6	1.4.7	Bartack	Reinforce pockets, shirt openings, belt loops as well as at lower end of a zipper.
	1.4.7	1.4.8	Denim bartack	Reinforce pockets, shirt openings, belt loops as well as at lower end of a zipper.
	1.4.8	1.4.9	Decorative bartack	Reinforce pockets, shirt openings, belt loops as well as at lower end of a zipper.
	1.4.9	1.4.10	Cross bartack	Reinforce pockets, shirt openings and belt loops.

www.sewshop.eu

Decorative stitches (720)

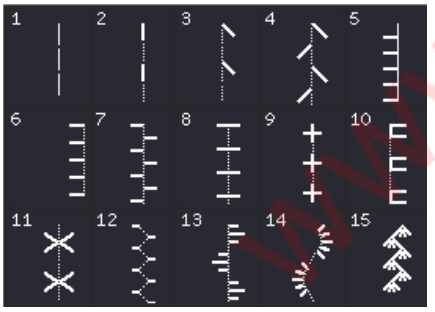

2.1 Quilt stitches - Handlook stitches

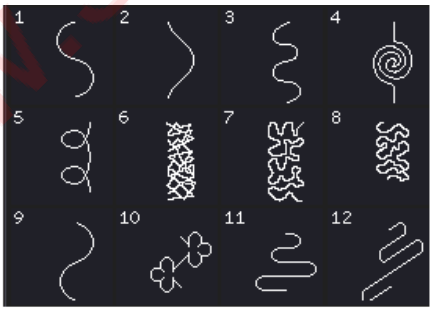

2.2 Quilt stitches - Stippling stitches

2.2 Quilt stitches - Stippling stitches

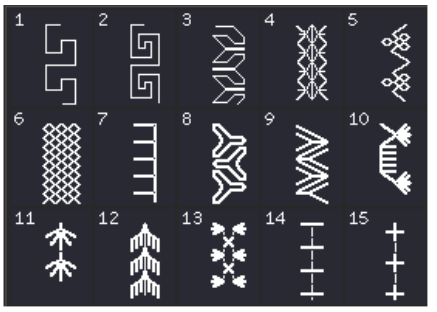

2.3 Quilt stitches - Crazy patch stitches

2.3 Quilt stitches - Crazy patch stitches

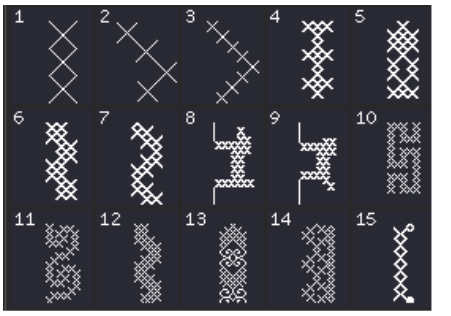

3.1 Needle art stitches - Cross stitches

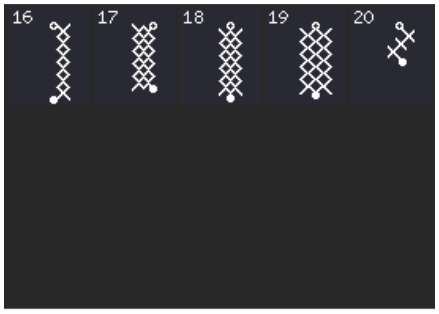

3.1 Needle art stitches - Cross stitches

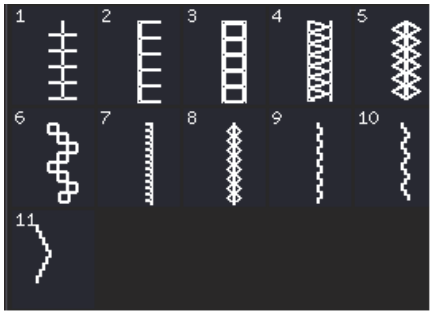

3.2 Needle art stitches - Needlework stitches

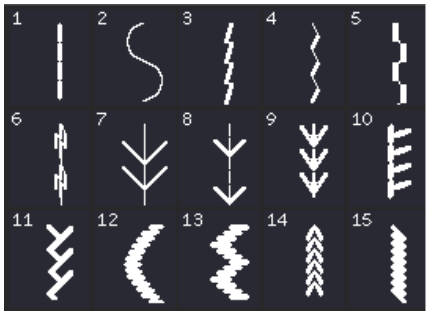

3.3 Needle art stitches - Antique hand embroidery stitches

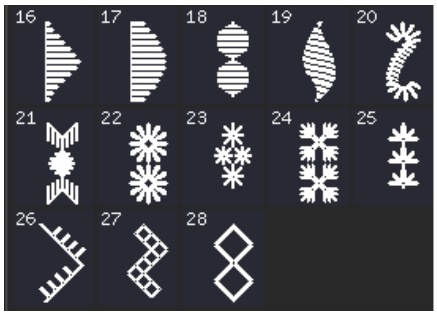

3.3 Needle art stitches - Antique hand embroidery stitches

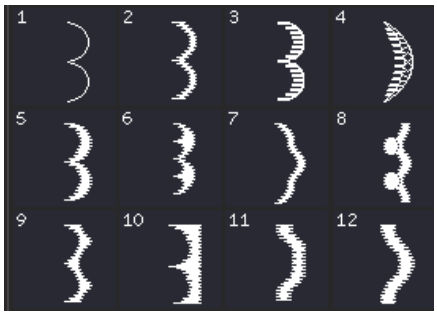

4.1 Satin stitches - Scallop edges

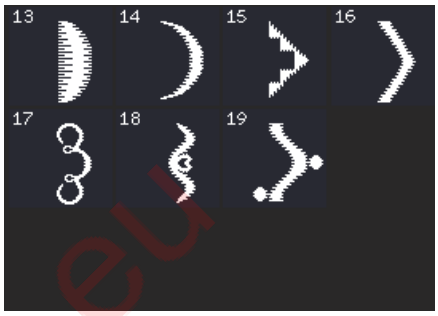

4.1 Satin stitches - Scallop edges

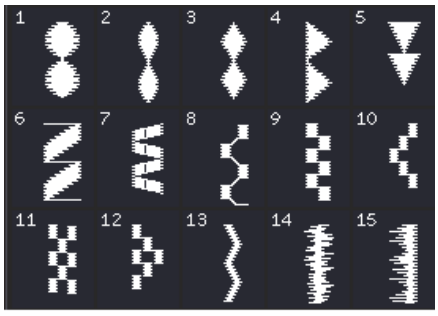

4.2 Satin stitches - Satin elements

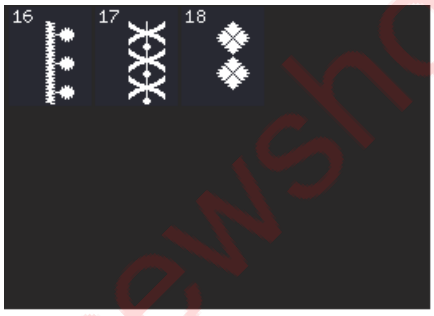

4.2 Satin stitches - Satin elements

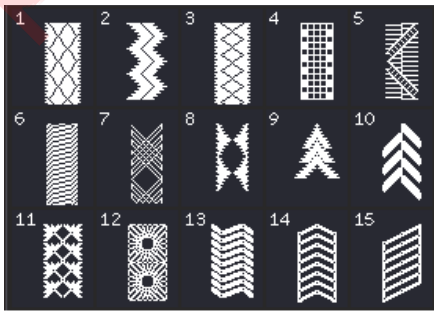

4.3 Satin stitches - Borders

4.3 Satin stitches - Borders

5.1 Decorative stitches - Leaves and flowers

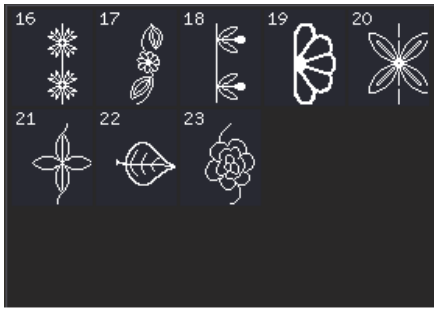

5.1 Decorative stitches - Leaves and flowers

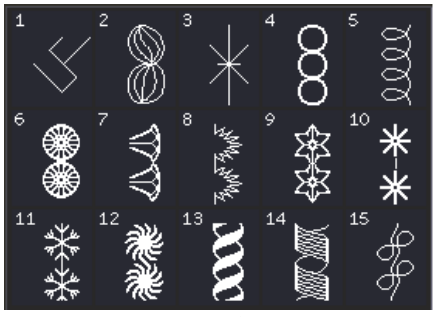

5.2 Decorative stitches - Art stitches

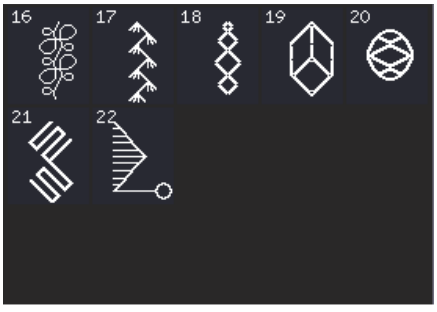

5.2 Decorative stitches - Art stitches

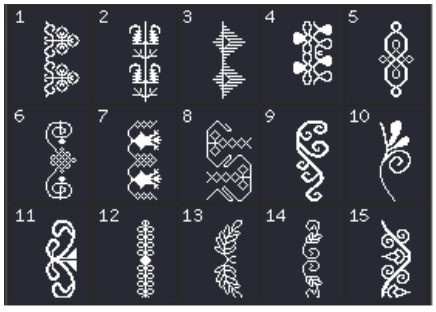

5.3 Decorative stitches - Ornamental stitches

www.sewshop.eu

5.3 Decorative stitches - Ornamental stitches

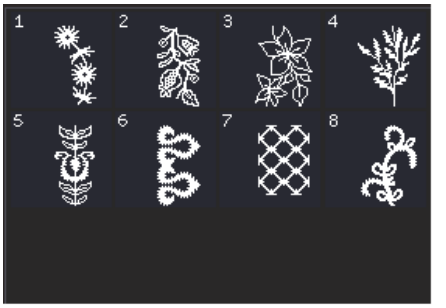

5.4 Decorative stitches - Maxi art stitches

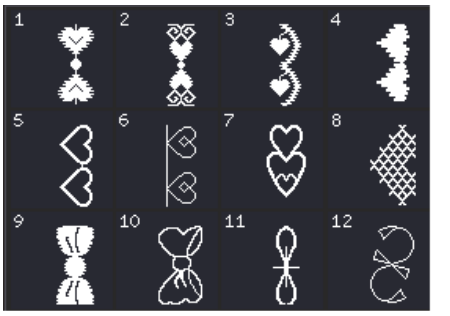

6.1 Miscellaneous stitches - Bows and hearts

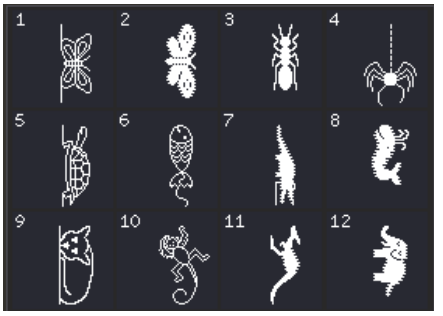

6.2 Miscellaneous stitches - Animal stitches

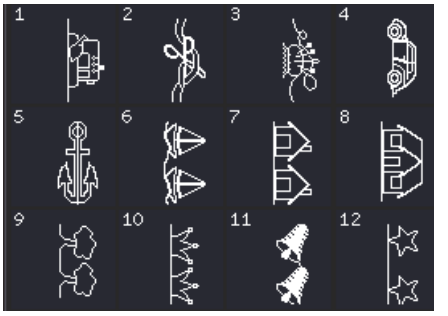

6.3 Sewing techniques - Fun stitches

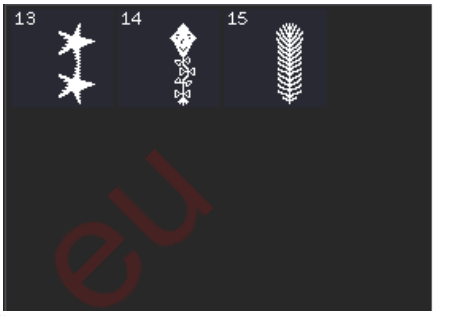

6.3 Sewing techniques - Fun stitches

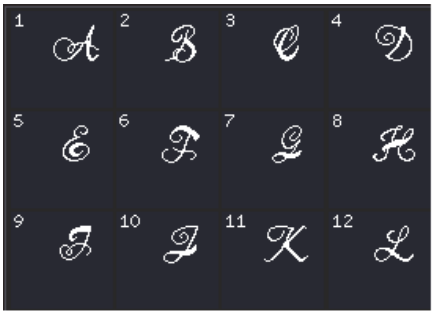

7.1 Monogram stitches - Monogram 1

7.1 Monogram stitches - Monogram 1

7.1 Monogram stitches - Monogram 1

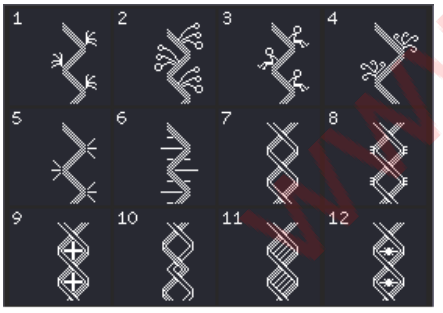

8.1 Stitch techniques - Ribbon stitches

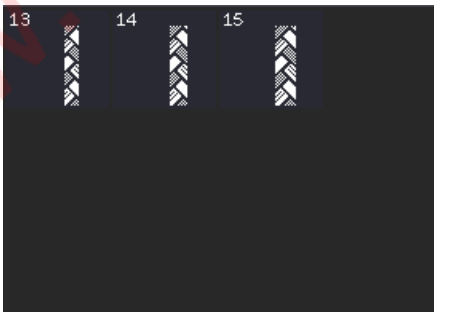

8.1 Stitch techniques - Ribbon stitches

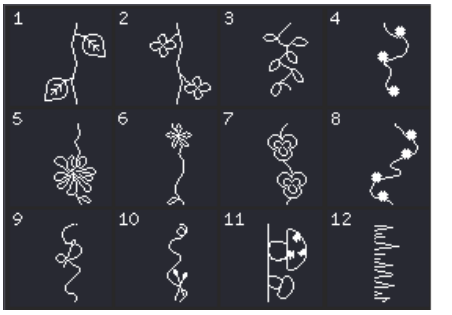

8.2 Stitch techniques - Stacking stitches

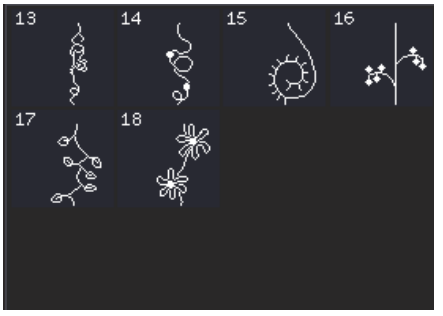

8.2 Stitch techniques - Stacking stitches

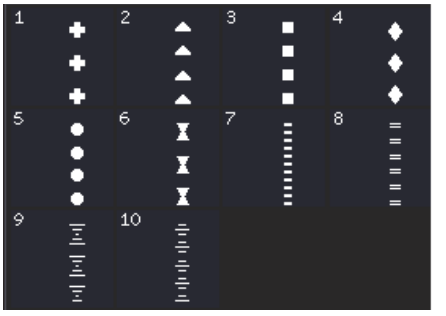

8.3 Stitch techniques - Floating stitches

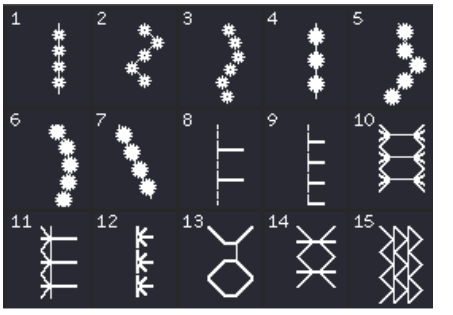

9.1 Additional stitches - Optional feet stitches

www.sewshop.eu

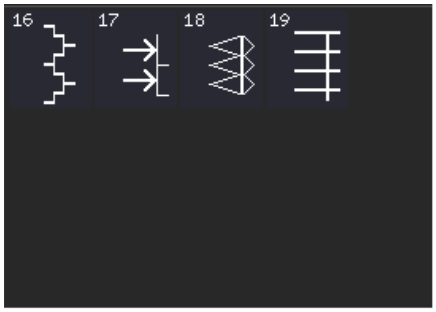

9.1 Additional stitches - Optional feet stitches

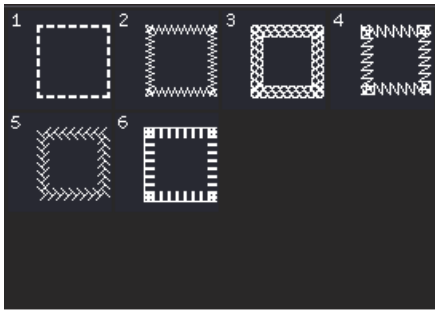

9.2 Additional stitches - Four direction sewing

Decorative stitches (710)

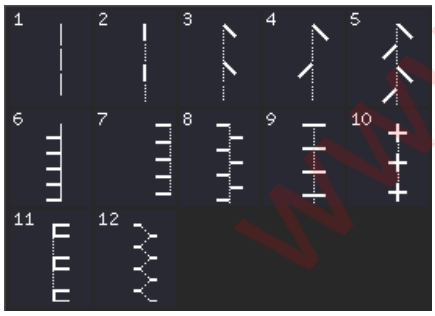

2.1 Quilt stitches - Handlook stitches

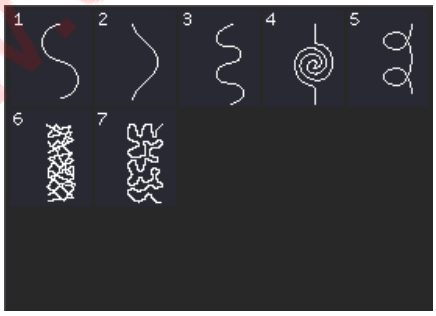

2.2 Quilt stitches - Stippling stitches

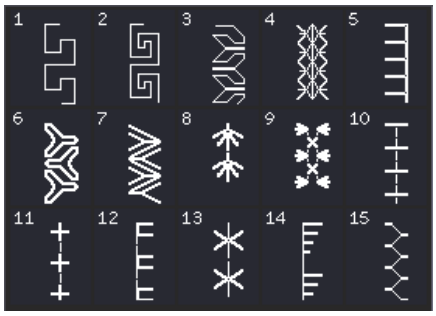

2.3 Quilt stitches - Crazy patch stitches

2.3 Quilt stitches - Crazy patch stitches

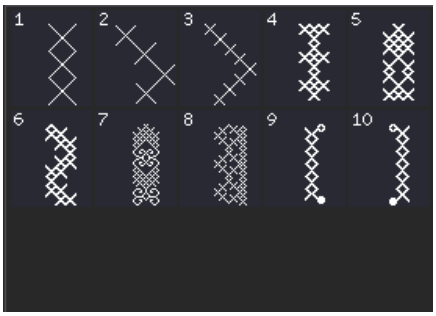

3.1 Needle art stitches - Cross stitches

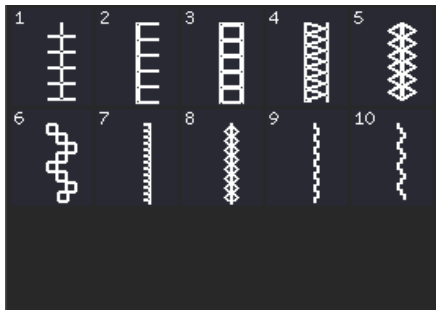

3.2 Needle art stitches - Needlework stitches

www.sewshop.eu

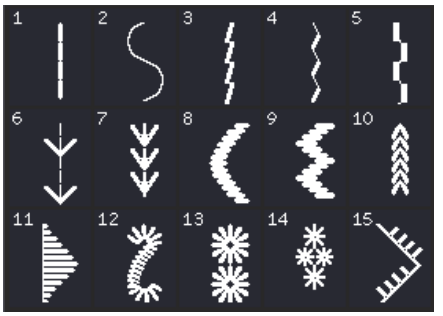

3.3 Needle art stitches - Antique hand embroidery stitches

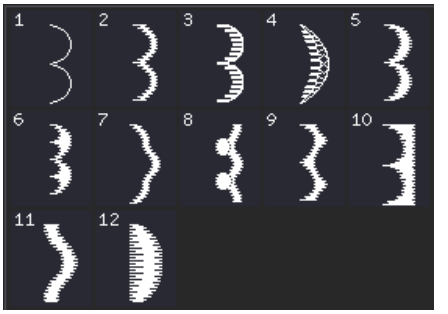

4.1 Satin stitches - Scallop edges

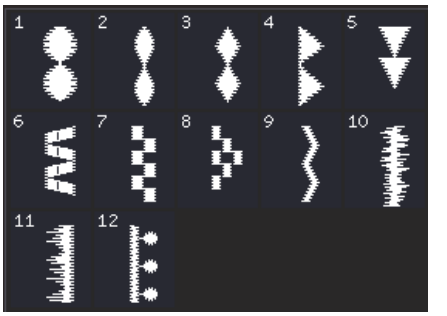

4.2 Satin stitches - Satin elements

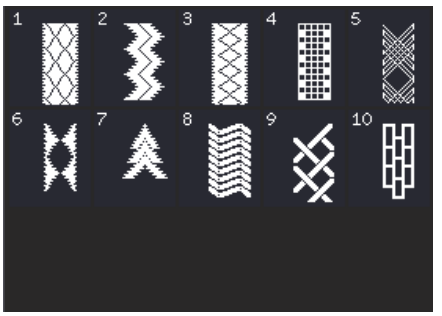

4.3 Satin stitches - Broders

5.1 Decorative stitches - Leaves and flowers

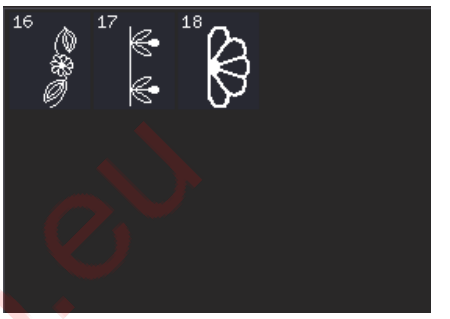

5.1 Decorative stitches - Leaves and flowers

5.2 Decorative stitches - Art stitches

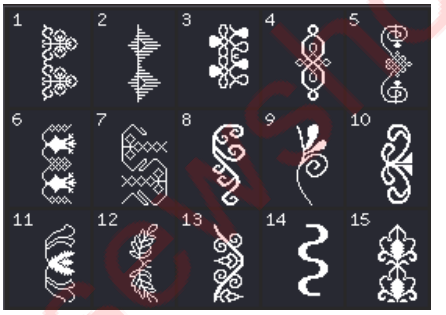

5.3 Decorative stitches - Ornamental stitches

5.3 Decorative stitches - Ornamental stitches

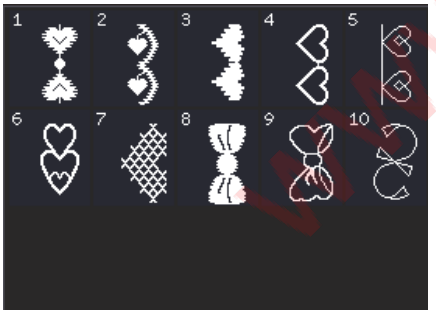

6.1 Miscellaneous stitches - Bows and hearts

6.2 Miscellaneous stitches - Animal stitches

6.3 Sewing techniques - Fun stitches

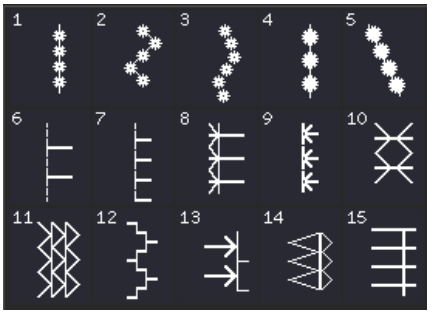

7.1 Optional feet stitches

www.sewshop.eu

Alphabets

Comic

Script

Outline (720)

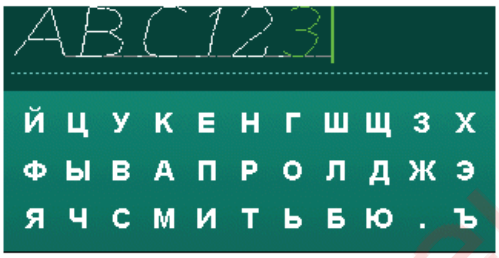

Cyrillic

www.sewshop.eu

www.sewshop.eu

Preparations 2

www.sewshop.eu

Unpacking

1. Place the box on a steady, flat surface. Lift the machine out of the box and remove the outer packaging and lift off the hard cover.
2. Remove all other packing material and the plastic bags.
3. Slide off the accessory tray and remove the styrofoam underneath the free arm.

Note: Styrofoam left in the accessory tray while sewing may affect stitch quality. The styrofoam is for packing purposes only and should be removed.

Note: Your PFAFF® sewing machine is adjusted to provide the best stitch result at normal room temperature. Extreme hot and cold temperatures can affect the sewn result.

Connecting the foot control cord

Among the accessories you will find the foot control cord. Connecting the foot control cord to the foot control is only neccessary the very first time you are going to use the machine.

1. Take out the foot control cord. Turn the foot control over. Connect the cord to the socket inside the open space on the underside of the foot control as shown.
2. Push firmly to make sure it is properly connected.
3. Pull the cord into the slot to the left of the socket to ensure that the foot control will rest evenly on the floor.

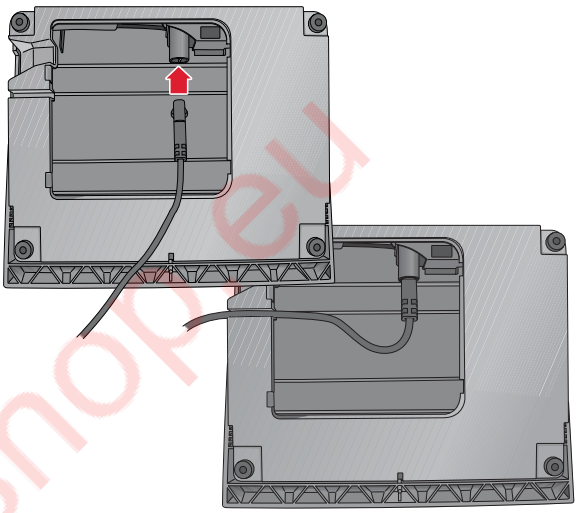

Connect the power cord and foot control

Note: Before plugging in the foot control, check to ensure that it is type "FR5" (see underside of foot control).

1. Connect the foot control cord to the front socket on the bottom right side of the machine (A).
2. Connect the power cord to the rear socket on the bottom right side of the machine (B). Plug the cord into a wall socket.
3. Press the I/O switch to "I" to turn on power and light (C).

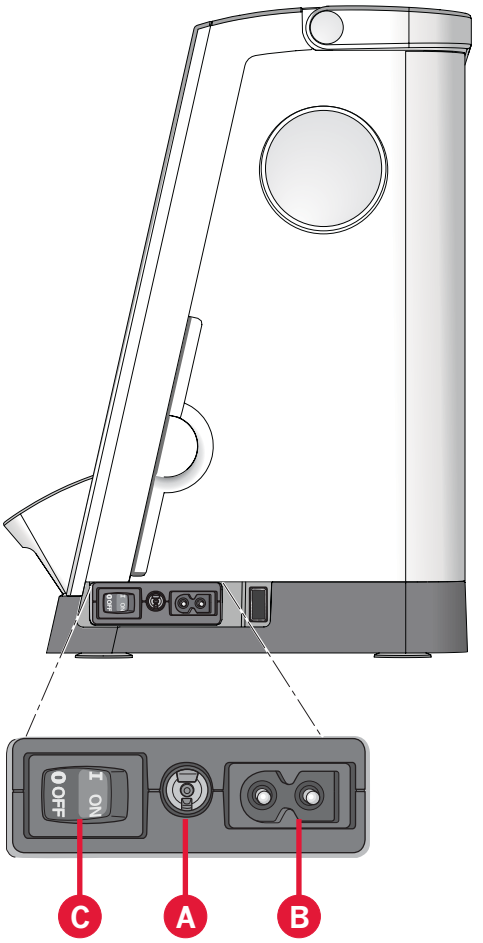

For the USA and Canada

This sewing machine has a polarized plug (one blade wider than the other). To reduce the risk of electric shock, this plug is intended to fit in a polarized outlet only one way. If the plug does not fit fully in the outlet, reverse the plug. If it still does not fit, contact a qualified electrician to install the proper outlet. Do not modify the plug in any way.

www.sewshop.eu

Pack away after sewing

1. Turn the main switch I/O to "O" (C).
2. Unplug the cord from the wall socket and then from the machine (B).
3. Unplug the foot control cord from the machine (A). Wind the foot control cord and place inside the open area on the underside of the foot control.
4. Place all accessories in the accessory tray. Slide the tray on to the machine around the free arm.
5. Place the foot control in the space above the free arm.
6. Put on the hard cover.

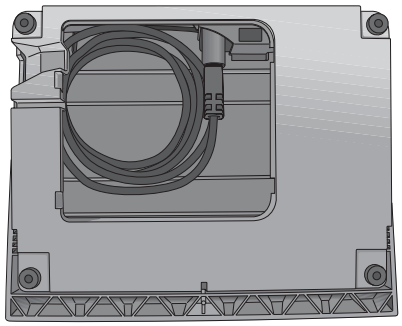

LED lights

Your machine has LED lights which distribute the light evenly over the sewing area and eliminates shadows.

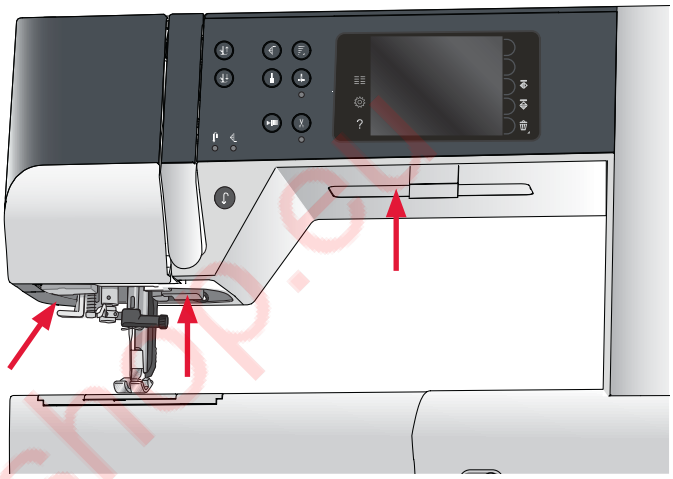

Free arm

To use the free arm, slide off the accessory tray. When attached, a hook keeps the accessory tray locked to the machine. Remove the tray by sliding it to the left.

Thread cutter

To use the thread cutter, pull the thread from back to front as shown.

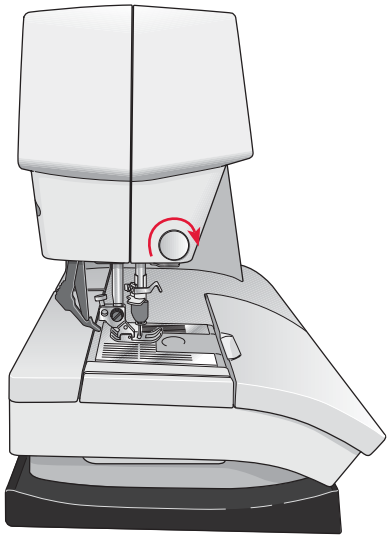

Electronic knee-lift (720)

Your machine comes with an electronic knee-lift for regulating the presser foot height.

Insert the knee-lift in the designated hole on the machine. The flat side must face upwards. Adjust the rectangular bar on the knee-lift until it is positioned at a comfortable height for you (A).

If you press the knee-lift to the right, the presser foot will raise. You can now guide the fabric with both hands.

To remove the knee-lift, just pull it straight out of the hole.

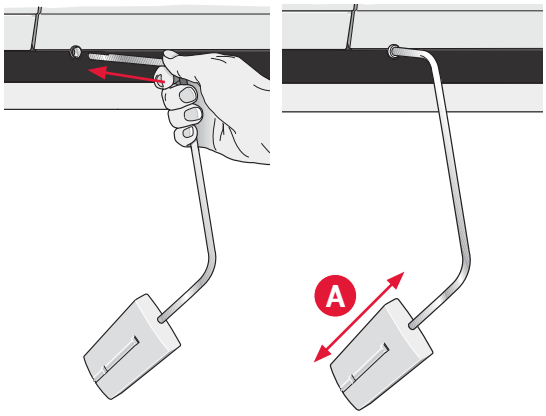

www.sewshop.eu

Spool pins

Your machine has two spool pins, a main spool pin and an auxiliary spool pin. The spool pins are designed for all types of thread. The main spool pin is adjustable and can be used both in a horizontal position (the thread reels off the spool) and a vertical position (the thread spool rotates). Use the horizontal position for regular threads and the vertical position for large spools or specialty threads.

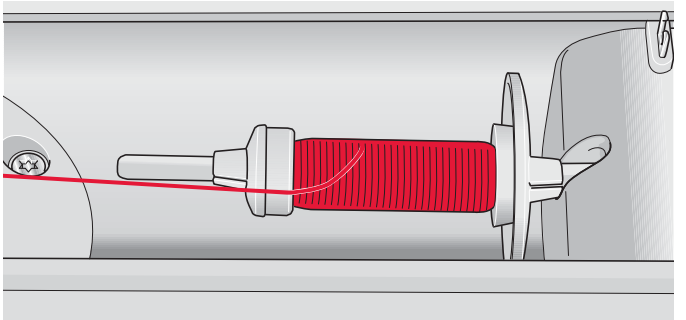

Small spool cap

Horizontal position

Place a spool cap and the thread spool on the spool pin. Make sure that the thread reels off the spool counter clock-wise and slide on a second spool cap.

Note: Not all thread spools are manufactured in the same way. If you experience problems with the thread, turn it in the opposite way or use the vertical position.

Use a spool cap slightly larger than the thread spool. For narrow thread spools, use a smaller spool cap in front of the spool. For large thread spools, use a larger spool cap in front of the spool.

The flat side of the spool cap should be pressed firmly against the spool. There should be no space between the spool cap and the thread spool.

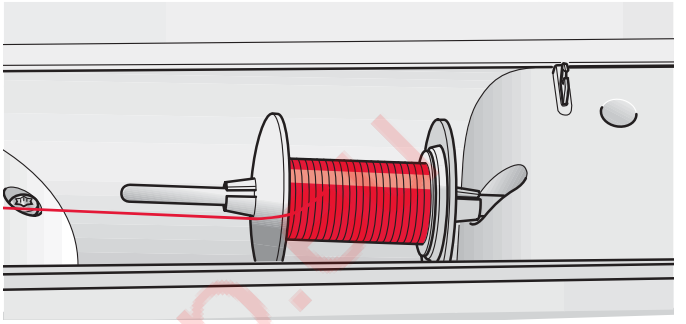

Large spool cap

Vertical position

Raise the spool pin to the vertical position. Slide on the large spool cap and place a felt pad under the thread spool. This is to prevent the thread from reeling off too fast.

Do not place a spool cap on top of the spool pin as that would prevent the spool from rotating.

Note: When the spool pin is used in the vertical position, the thread tension might need to be adjusted manually.

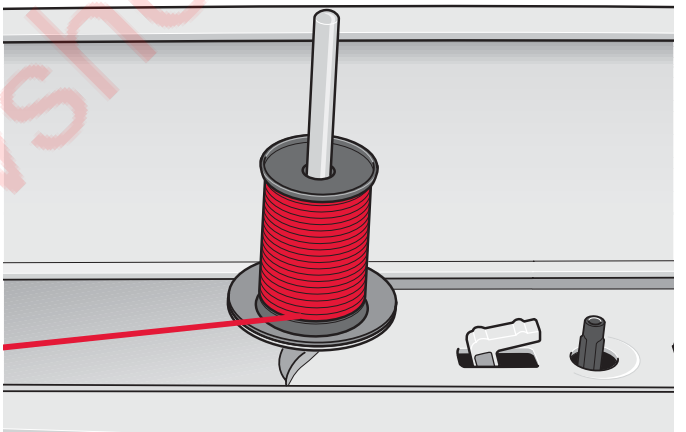

Main spool pin in vertical position

Auxiliary spool pin

The auxiliary spool pin is used when winding a bobbin thread from a second spool of thread or for a second spool when sewing with a twin needle.

Raise the auxiliary spool pin. Slide on a large spool cap and place a felt pad under the thread spool.

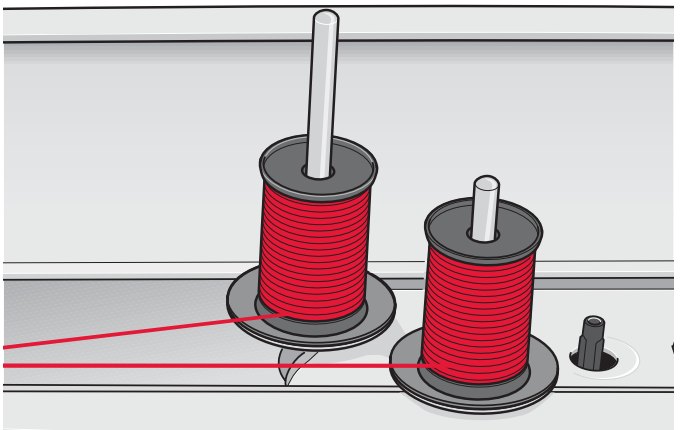

Auxiliary spool pin and main spool pin in vertical position.

www.sewshop.cl

Threading the machine

Make sure that the presser foot is raised and the needle is in the up position.

1. Place the thread on the spool pin and fit a spool cap of the right size.

Note: Hold thread with both hands to prevent it from slacking while threading. This ensures that the thread will be positioned properly in the threading path.

2. Pull the thread into the thread guide by pulling it from the front to the back (A). Make sure the thread clicks into place. Then pull the thread underneath the bobbin winder thread guide (B) on the pre-tension disc (C).
3. Thread down through the right-hand threading slot and then upwards through the left-hand threading slot.
4. Bring the thread from the right into the take-up lever (D) and down in the left-hand threading slot to the needle thread guide (E).
5. Thread the needle.

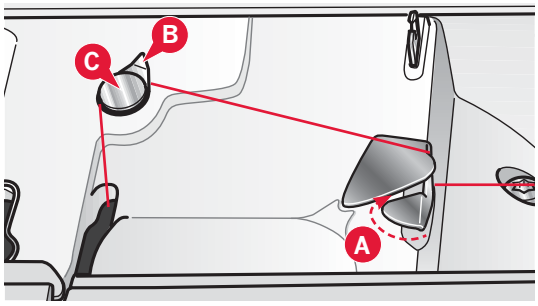

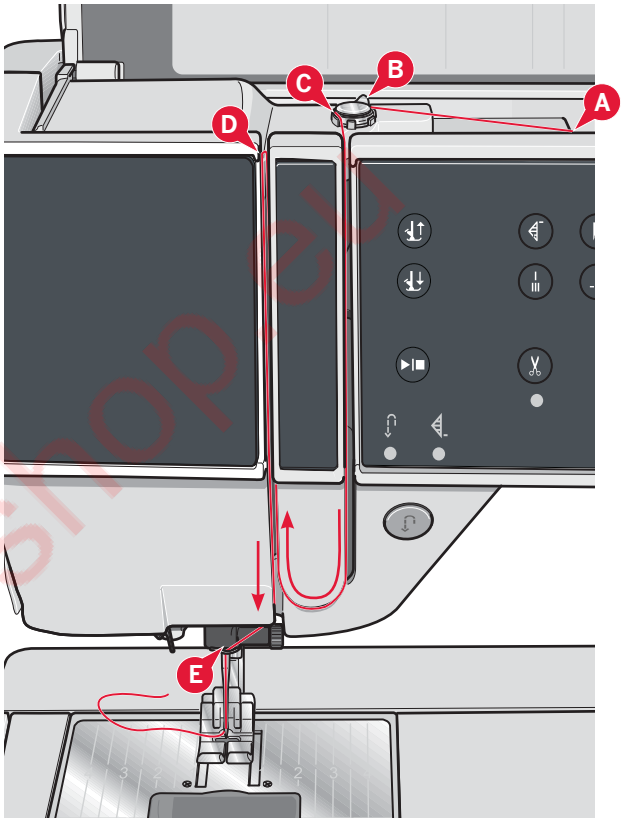

Needle threader

The needle threader allows you to thread the needle automatically. The needle must be in the up position to use the built-in needle threader.

1. Lower the presser foot.
2. Use the handle to pull the needle threader all the way down. The threader hook (G) swivels through the needle eye.
3. Place the thread from the back over the hook (F) and under the thread hook (G).
4. Let the needle threader gently swing back. The hook pulls the thread through the needle eye and forms a loop behind the needle. Pull the thread loop out behind the needle.

Note: The needle threader is designed to be used for size 70-120 needles. You cannot use the needle threader for size 60 needle or smaller, the wing needle, twin needle or triple needle. There are also some optional accessories that require manual threading of the needle.

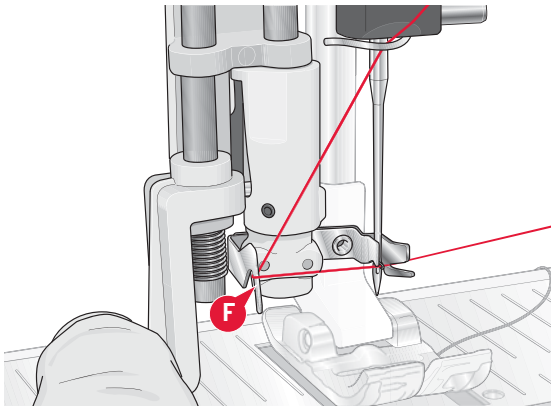

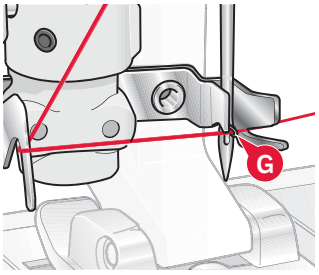

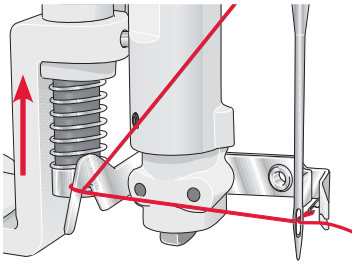

www.sewshop.eu

Threading for twin needle

Replace the sewing needle with a twin needle. Make sure that the presser foot is raised and the needle is in the up position.

1. Place the thread on the spool pin and fit a spool cap of the right size. Raise the auxiliary spool pin. Slide on a large spool cap and a felt pad. Place the second thread on the spool pin.

Note: Hold threads with both hands to prevent them from slacking while threading. This ensures that the threads will be positioned properly in the threading path.

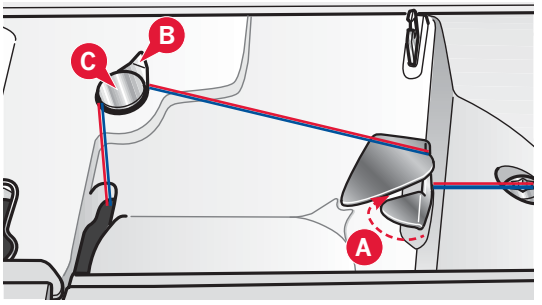

2. Pull the threads into the thread guide by pulling them from the front to the back (A). Make sure the threads click into place. Then pull the threads underneath the bobbin winder thread guide (B) on the pre-tension disc (C).
3. Thread down through the right-hand threading slot and then upwards through the left-hand threading slot. Make sure that you pass one thread to the left and one thread to the right sides of the tension disk (F).
4. Bring the threads from the right into the take-up lever (D) and down in the left-hand threading slot. Make sure that one thread is inside the needle thread guide (E) and the other one outside. Make sure that the threads do not become twisted together.
5. Thread the needles.

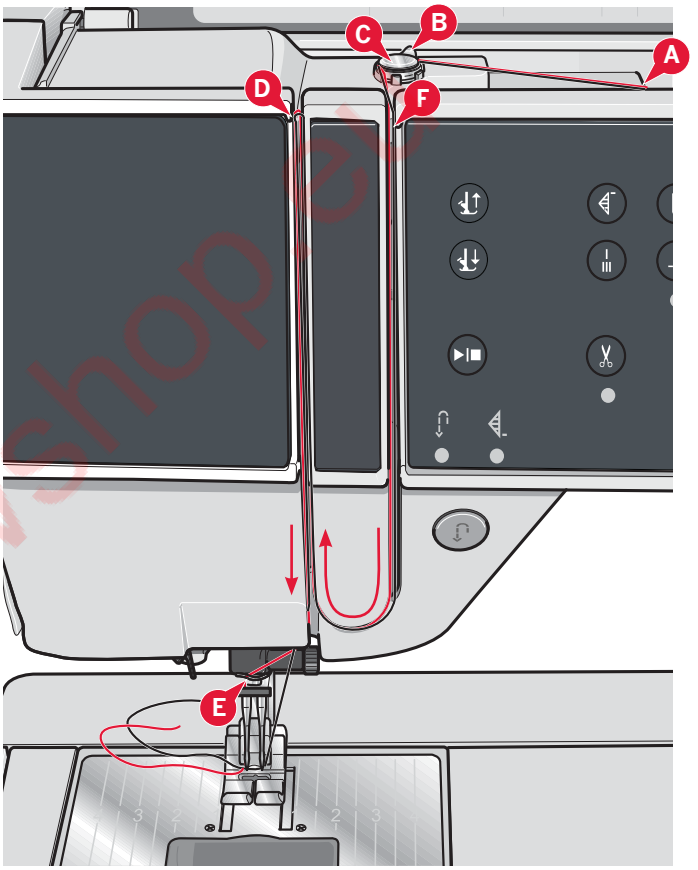

Note: Activate twin needle and select the correct twin needle width in Settings menu. This will limit the width of all stitches for that needle size to prevent damage to presser foot and needle.

Note: The weight and irregular surface of specialty threads such as metallic increases the amount of friction on the thread. By reducing the tension, the risk of needle breakage is prevented.

Note: Do not use asymmetrical twin needles (G), since it may damage your sewing machine.

Thread sensor

When the bobbin thread is running low, the machine stops and a pop-up appears on the screen. Replace with a wound bobbin and continue sewing.

Note: When the bobbin thread is almost empty, the bobbin thread low pop-up appears on the screen. You can continue sewing without closing the pop-up before the bobbin thread runs out completly.

www.sewshop.eu

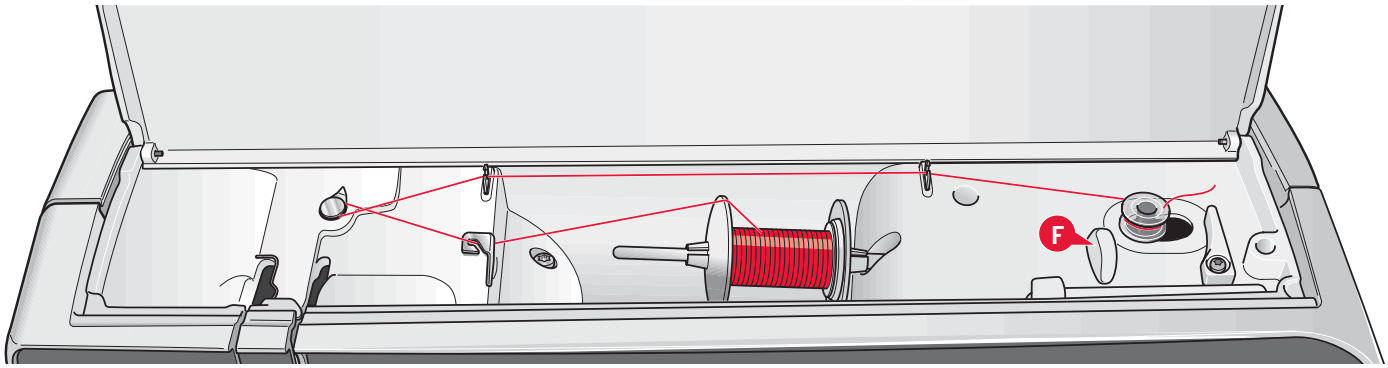

Bobbin winding

Winding from horizontal position

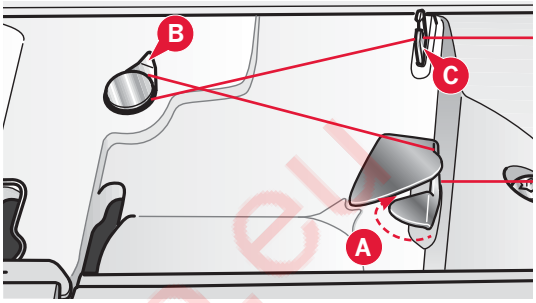

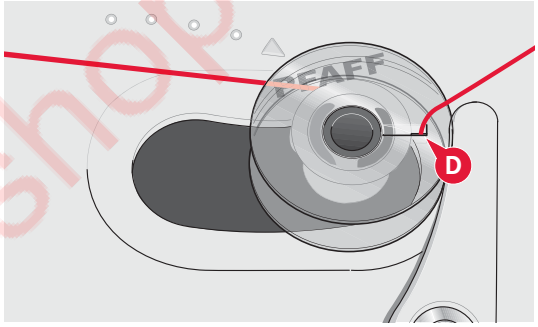

1. Place an empty bobbin on the bobbin winder spindle, with the logo facing up. Use only the original PFAFF® bobbins approved for this model.
2. Place the thread spool on the spool pin in horizontal position. Slide a spool cap tightly against the spool.
3. Place the thread into the thread guide (A) from front to back. Pull the thread counter-clockwise above the bobbin winder thread guide (B) and then through the bobbin thread guides (C) at the rear.

   Note: Make sure the thread is pulled securely inside the pre-tension device for correct thread tension.
4. Thread through the slot in the bobbin (D) from the inside to the outside.
5. Push the bobbin winder spindle to the right to wind. A pop-up appears on the screen to inform you that bobbin winding is active. To adjust winding speed, use the slider in the pop-up. Start bobbin winding by pressing the foot control or touch the start/stop.

   When the bobbin is full, it will stop winding. Release the foot control or touch start/stop to stop the bobbin winder motor from running. Move the bobbin winder spindle to the left and the pop-up will close. Remove the bobbin and cut the thread using the bobbin thread cutter (F).

Winding while threaded

Make sure that the presser foot and the needle are in the up position. To prevent the needle from bending, pull the thread out of the needle.

Bring the thread up from the needle thread guide (E), upward through the left-hand threading slot and through the bobbin thread guides (C). Then follow step 4 and 5 above.

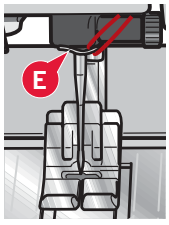

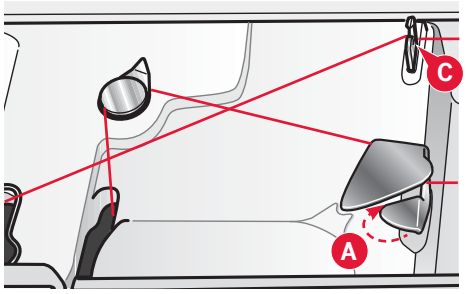

www.sewshop.eu

Inserting the bobbin

1. Remove the bobbin cover by sliding it towards you.
2. Place the bobbin in the bobbin case with the logotype facing up and the thread unreeling from the left of the bobbin. The bobbin will then rotate counter-clockwise when you pull out the thread.
3. Place your finger on the bobbin to keep it from turning as you pull the thread firmly to the right and then to the left into the tension spring (A) until it "clicks" into place.
4. Continue threading around (B) and to the right of the thread cutter (C). Replace the cover. Pull the thread to the left to cut.

The bobbin cover can be used as a magnifying glass.

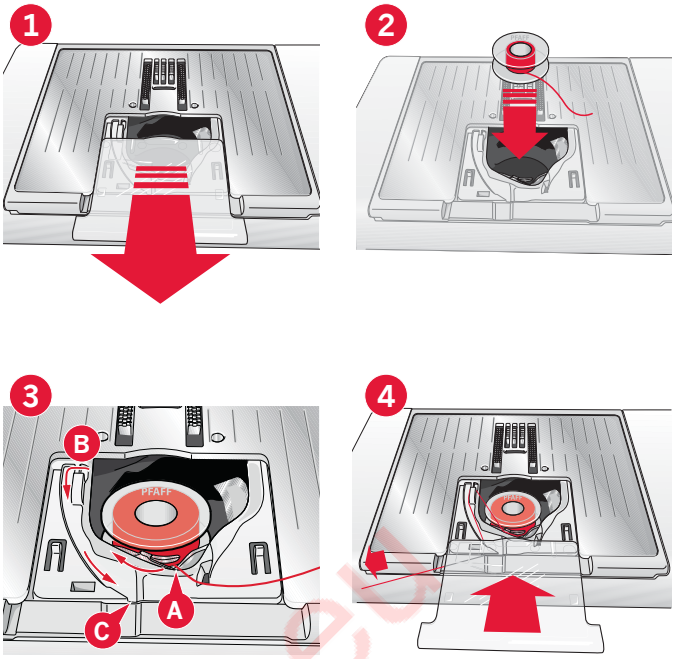

IDT™ system (Integrated Dual Feed)

For sewing any fabric precisely the PFAFF® sewing machine provides the ideal solution: the integrated dual feed, IDT™ system. As on industrial machines, the IDT™ system feeds the fabric from the top and bottom at the same time. The material is fed precisely, eliminating puckering on seams in light weight fabrics such as silk and rayon. The dual feed action of the IDT™ system prevents layers from shifting while sewing, keeping quilt layers aligned and ensuring a more perfect match when sewing plaid or striped fabrics.

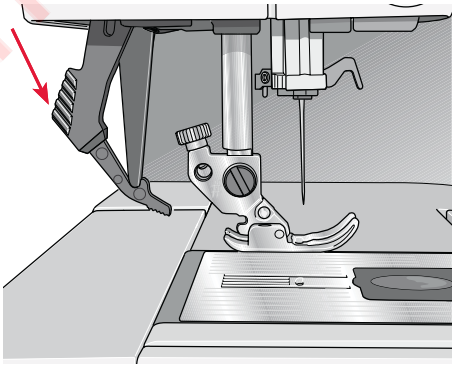

Engaging the IDT™ system

Important: For all work with the IDT™ system use presser feet with the center back cut-out (A).

Raise the presser foot. Press the IDT™ system down until it engages.

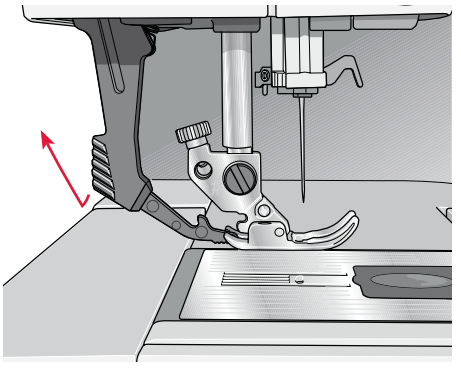

Disengaging the IDT™ system

Raise the presser foot. Hold the IDT™ system with two fingers at the ribbed ankle. Pull the IDT™ system down, then pull it away from you to release the IDT™ system slowly upward.

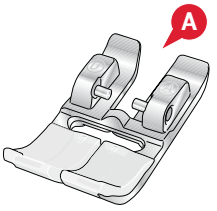

www.sewshop.eu

Changing the presser foot

Remove presser foot

Press the presser foot downwards until it disengages from the presser foot holder.

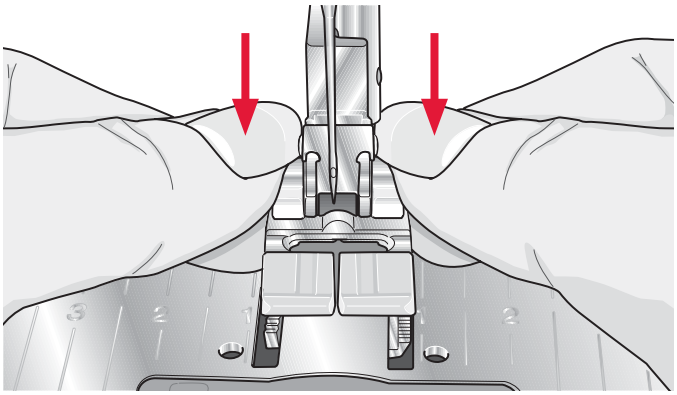

Attach presser foot

Line up the pins on the foot with the gap underneath the presser foot holder. Press upwards until the foot snaps into place.

You can also use the presser foot up/down buttons to raise or lower the presser foot holder. Place the presser foot under the presser foot holder, so that the pins of the foot snap onto the presser foot holder when lowered.

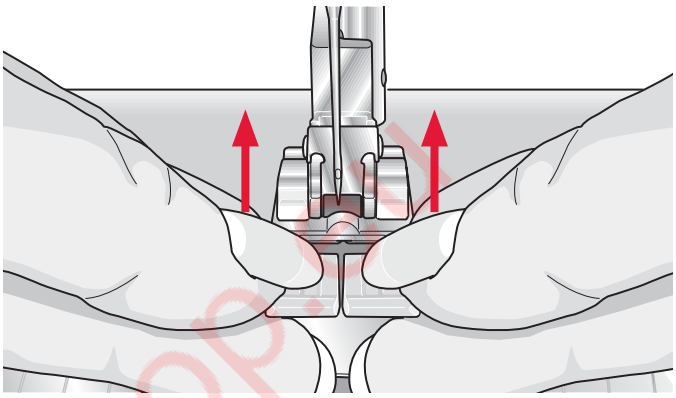

Changing the needle

1. Use the hole in the multi-purpose tool to hold the needle.
2. Loosen the needle screw.
3. Remove the needle.
4. Insert the new needle, using the multi-purpose tool. Push the new needle upwards with the flat side away from you until it will go no further.
5. Tighten the needle screw as tight as it will go.

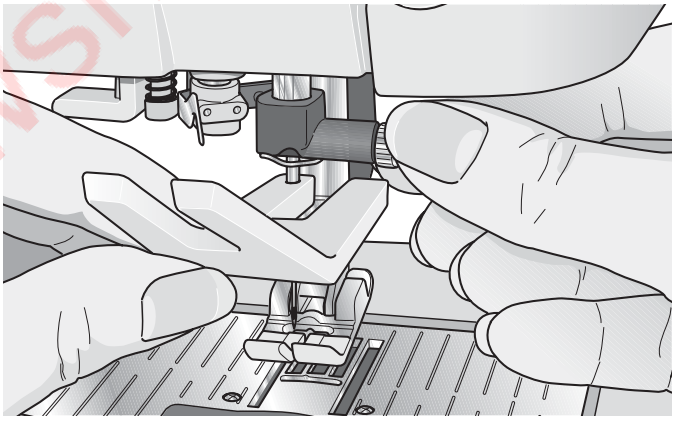

Change to straight stitch needle plate

1. Remove the presser foot and slide off the bobbin cover.
2. Make sure that the feed dogs are lowered. Place the screwdriver under the needle plate as shown in the picture and gently turn the screwdriver to pop off the needle plate.
3. With feed dogs lowered, place the straight stitch needle plate so that it fits into the notch at the back (D). Press the straight stitch needle plate down until it clicks into place. Slide on bobbin cover.

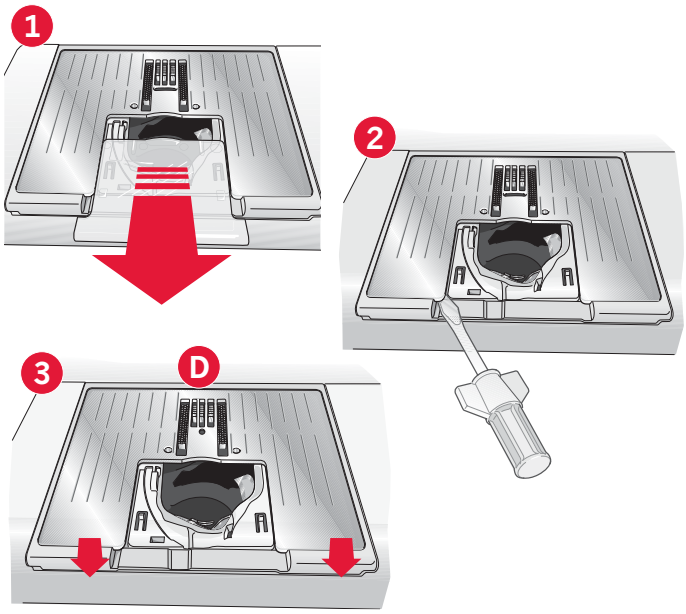

www.sewshop.nl

Lowering feed dogs (710)

You can lower the feed dogs by moving the switch on the front of the sewing machine to the left. Move the switch to the right if you wish to raise the feed dogs.

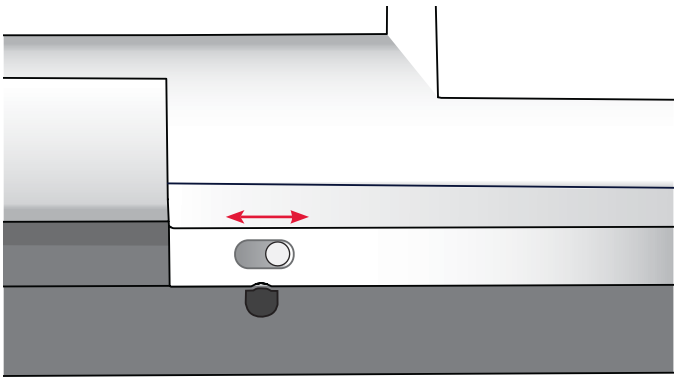

Needles

The sewing machine needle plays an important role in successful sewing. Use only quality needles. We recommend needles of system 130/705H. The needle package included with your machine contains needles of the most frequently used sizes.

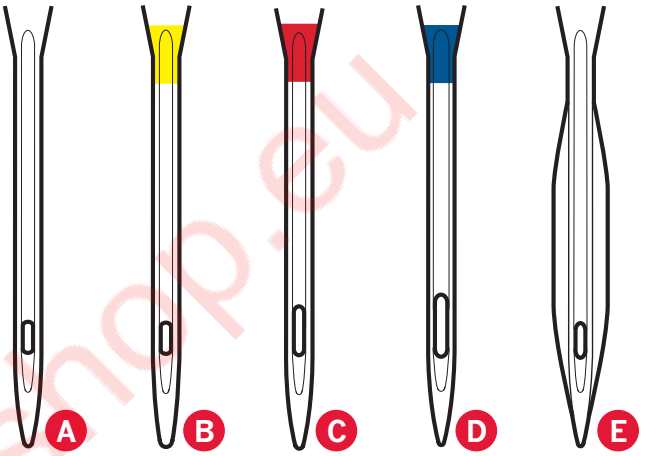

Universal needle (A)

Universal needles have a slightly rounded point and come in a variety of sizes. For general sewing in a variety of fabric types and weights.

Stretch needle (B)

Stretch needles have a special scarf to eliminate skipped stitches when there is a flex in the fabric. For knits, swimwear, fleece, synthetic suedes and leathers.

Embroidery needle (C)

Embroidery needles have a special scarf, a slightly rounded point and a slightly larger eye to avoid damage to thread and materials. Use with metallic and other specialty threads for embroidery and decorative sewing.

Denim needle (D)

Denim needles have a sharp point to penetrate tightly woven fabrics without deflecting the needle. For canvas, denim, microfibers.

Wing needle (E)

The Wing needle has wide wings on the side of the needle to poke holes in the fabric when sewing entredeux and other hemstitches on natural fiber fabrics.

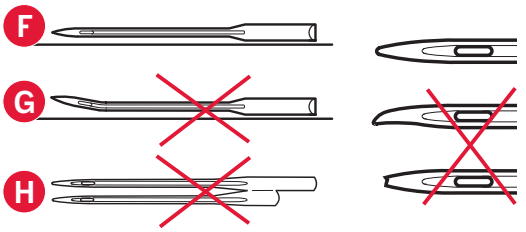

Note: Change the needle often. Always use a straight needle with a sharp point (F).

A damaged needle (G) can cause skipped stitches, breakage or snapping of thread. A damaged needle can also damage the needle plate.

Do not use asymmetrical twin needles (H), since it may damage your sewing machine.

www.sewshop.eu

Threads

There are many threads on the market today developed for different purposes.

All purpose sewing thread

All purpose sewing thread is made of synthetic, cotton or cotton covered polyester. This type of thread is used for sewing garments and projects.

Embroidery thread

Embroidery thread is made of various fibers: rayon, polyester, acrylic or metallic. These threads create a smooth glossy appearance for embroidery and other decorative stitching.

Transparent thread

Transparent thread, also called monofilament thread, is single clear synthetic thread. It is used for quilting and other decorative sewing. Thread the sewing machine with the spool in the vertical position. When winding a bobbin, wind at slow speed and wind the bobbin half full.

Note: Some fabrics have excess dye which can cause discoloration on other fabrics or on your sewing machine. This discoloration may be very difficult or impossible to remove.

Fleece and denim fabric, especially red and blue, often contain excess dye.

If you suspect that your fabric/ready-to-wear garment contains a lot of excess dye, always pre-wash it before sewing/embroidering to prevent discoloration of your machine.

Stabilizers

Tear-away stabilizers

Tear-away stabilizers are used with stable woven fabrics. Place underneath fabric for decorative stitching or hoop with the fabric when embroidering. Tear away excess stabilizer after stitching.

Iron-on tear-away

Iron-on tear-away is a totally stable stabilizer that has a slick side that will iron on to fabric. It is recommended for knits and all unstable fabrics. Fuse it to the wrong side of the fabric before decorative stitching or hooping. Tear away excess stabilizer after stitching.

Cut-away stabilizer

Cut-away stabilizer does not tear so the excess has to be cut away. It is recommended for knits and all unstable fabrics, especially for hoop embroidery.

Water soluble stabilizer

Water soluble stabilizer is placed on top of the fabric when embellishing/embroidering napped and looped fabrics such as terry cloth. When embroidering cutwork, use it underneath the fabric. Place your work in water to dissolve the excess stabilizer. It is available in different thicknesses.

Disintegrating stabilizer

Disintegrating stabilizer is a stable, loosely woven fabric that is used for techniques such as cutwork and to crochet off the fabric edge. The stabilizer disappears with heat.

Sticky stabilizer

Sticky stabilizer is used for hoop embroidery when the fabric is too delicate or too small to be hooped. Hoop the sticky stabilizer with the paper side up. Remove the paper and stick the fabric onto the sticky surface. Tear away sticky stabilizer after stitching.

www.sewshop.eu

USB port

Your machine has an USB port to connect an USB stick.

Note: Make sure that the USB stick you use has the format FAT32.

Connect to and remove from USB port

Insert an USB stick in the port. The USB plug can only be inserted one way – do not force it into the port!

To remove, carefully pull the USB stick out straight.

Note: Do not remove the USB stick while it is active.

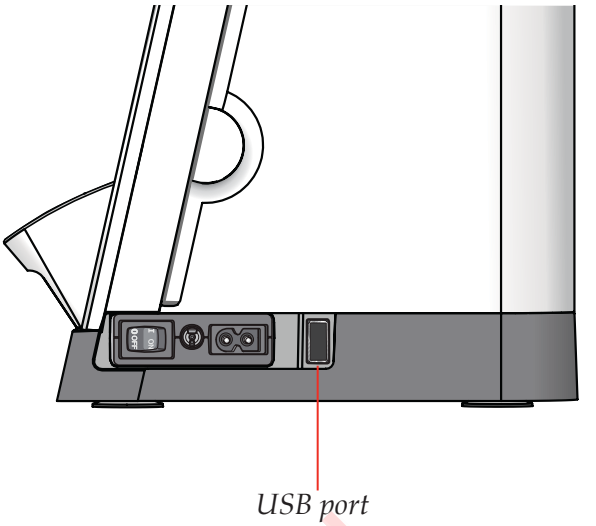

How to update your machine

Be sure to consult the web site at www.pfaff.com and/or your local authorized PFAFF® dealer for updates and upgrades for your machine and owner's manual.

Updating instructions

- Go to the PFAFF® web site at www.pfaff.com and find your sewing machine. Here you will find updates available for your machine.
- Download and unzip the update software to an USB stick.
- Make sure that your machine is turned off. Connect the USB stick loaded with the new software version to the USB port on your machine.
- While pressing and holding the reverse button, turn your machine on.
- The update starts automatically and you can release the reverse button when the process bar appears.

  Note: It might take up to one minute before the process bar appears and you can release the reverse button.
- When the update is complete the machine will restart automatically. Check the software version number in the settings menu.

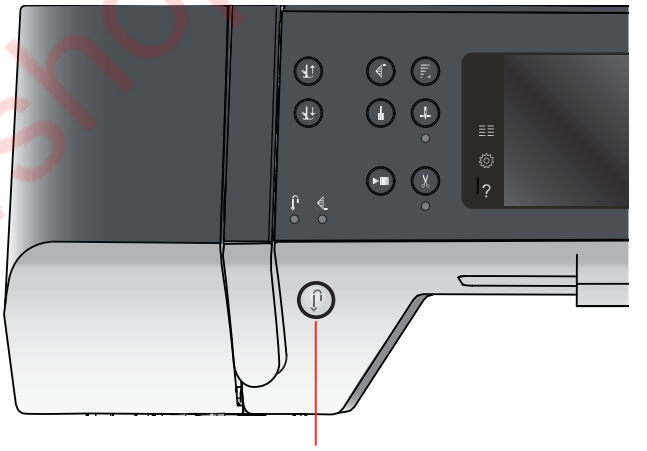

www.sewshop.eu

Machine settings & buttons 3

www.sewshop.eu

Touch screen

The touch screen on your PFAFF® sewing machine is very easy to work with - just touch it with your stylus or your finger tip to make your choices. Below describes the icons outside the PFAFF® Color Touch Screen. This touch rea will not change its appearance when switching between different modes.

Touch screen - overview

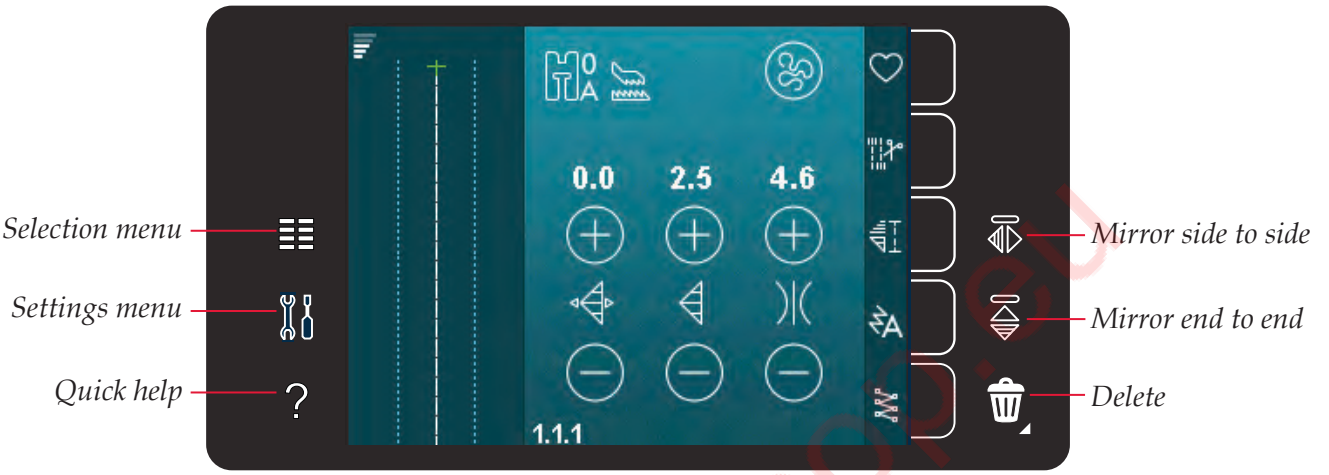

Selection menu

Touch this icon to open the selection menu. In selection menu you can select stitches, stitch fonts, open personal files or an USB device.

Settings menu

Touch this icon to open the settings menu. In this view you can change default settings and make manual adjustments to the machine settings and sewing settings. You will also find machine information in the settings menu.

Quick help

Your machine has built-in quick help, which gives you instant information about everything you see on the touch screen. Touch the quick help icon to activate quick help. A question mark will appear on the PFAFF® Color Touch Screen. Touch any icon, text or area on the touch area that you want information about. A pop-up gives a short explanation. Touch OK in the pop-up to exit quick help.

Mirror side to side

Mirror a stitch or sequence horizontally by touching the mirror side to side icon.

Mirror end to end

Mirror a stitch or sequence vertically by touching the mirror end to end icon.

Delete

Touch the delete icon when you want to delete a stitch, sequence or folder. If a folder is deleted, all files within the folder are deleted as well. To delete all files and folders in the current folder, long touch the delete icon.

Note: You cannot delete built-in stitches or fonts.

www.sewshop.eu

Settings menu

In the settings menu, you can change default settings and make manual adjustments to the machine settings and sewing settings.

Touch the icons to activate a function or open a list of choices. The settings are saved even after turning off the machine.

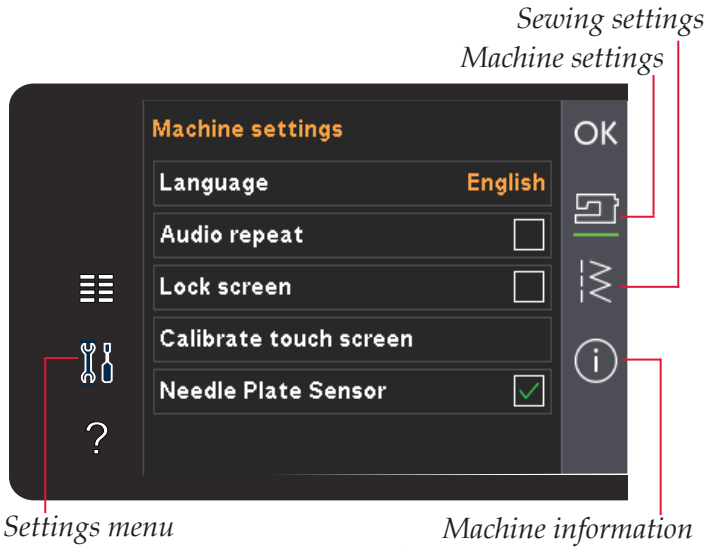

Machine settings

Language

Touch the language icon to view the available languages. Select your desired language from the list by touching it.

Pop-up for language selection.

Audio repeat

When active, the signal for warnings or attention pop-ups is repeated in intervals until it is cancelled.

Lock screen

If there is a possibility of bumping into the screen and changing the stitch or setting while sewing, it is easy to lock the screen.

When selected, the screen will become locked ten seconds after the last touch. The screen will be locked until you unlock it by touching OK.

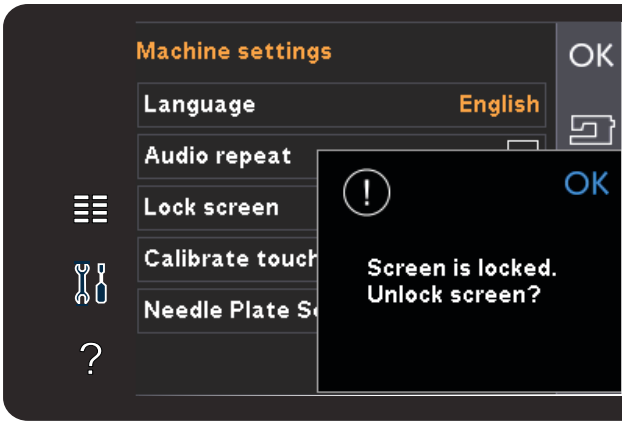

Pop-up for locking screen.

Calibrate touch screen

The touch screen can be calibrated by the individual user.

Touch the calibrate touch screen icon to open a special view for PFAFF® Color Touch Screen calibration. Follow the instructions on the screen to calibrate.

www.sewshop.eu

Sewing settings

Twin needle

Touch the twin needle icon to open a list for twin needle width selections. When a twin needle size is selected, the width of all stitches ill be limited for that needle size to prevent needle breakage. The setting is kept until you deselect the twin needle width.

The stitch width of the selected stitch will automatically be adjusted to fit the twin needle. If you select a stitch that is too wide for the twin needle size, a warning pop-up will appear. Select "off" in the twin needle list to deselect twin needle and go back to normal sewing.

List of twin needle width

Stitch width safety

Select this function when using a straight stitch presser foot or straight stitch needle plate to lock the needle in center position for all stitches. Stitch width safety will prevent damage to the needle and/or presser foot.

When turning on the machine with this setting activated and for every stitch selection that is not a straight stitch, a pop-up informs you that it is set to straight stitch. Deselect stitch width safety to go back to normal sewing.

Note: Twin needle and stitch width safety cannot be used at the same time.

Stitch width safety symbol

Twin needle symbol

Presser foot pressure

In some cases, you might need to adjust the presser foot pressure. Specialty techniques or thick fabric may require an adjustment. The higher the number the more pressure on the fabric.

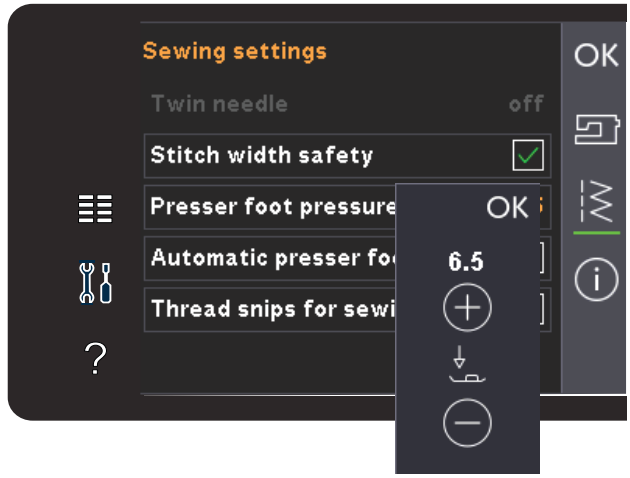

Presser foot pressure control

Automatic presser foot lift

When selected, the automatic presser foot lift are activated. The presser foot will raise to pivot height for example when stopping with the needle in the down position. When deselected, the presser foot will stay lowered even if the machine stops with the needle in down position.

Thread snips for sewing

When selected, the automatic thread snips is activated. The threads are cut automatically and the presser foot raises when sewing is complete, e.g. a buttonhole. When deselected, no automatic thread snip will be performed.

www.sewshop.eu

Machine information

The machine information tab contains the software version, memory left in machine and license information.

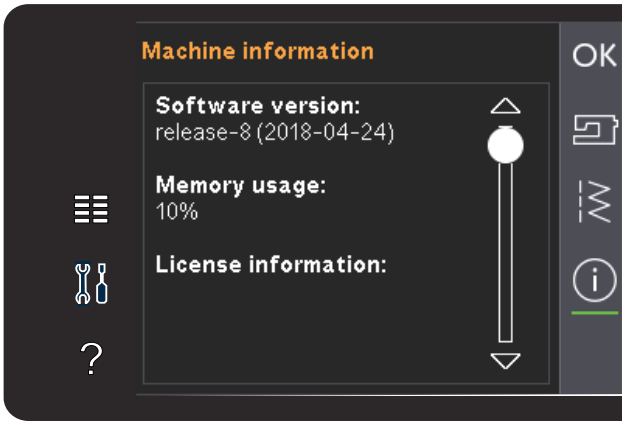

Common icons

There are some icons and functions that are frequently used on the screen. The most common are described below.

Scroll bar

Touch and drag the scroll bar to scroll up/down for more available options.

Long touch

Some icons have increased functions, marked with an arrow at the lower right corner. To access these functions, long touch the icon.

OK and Cancel

The OK and cancel icons are used to confirm your settings and selections. They are also used to close full screen windows.

To abort an actual process, touch cancel. To continue, touch OK.

www.sewshop.eu

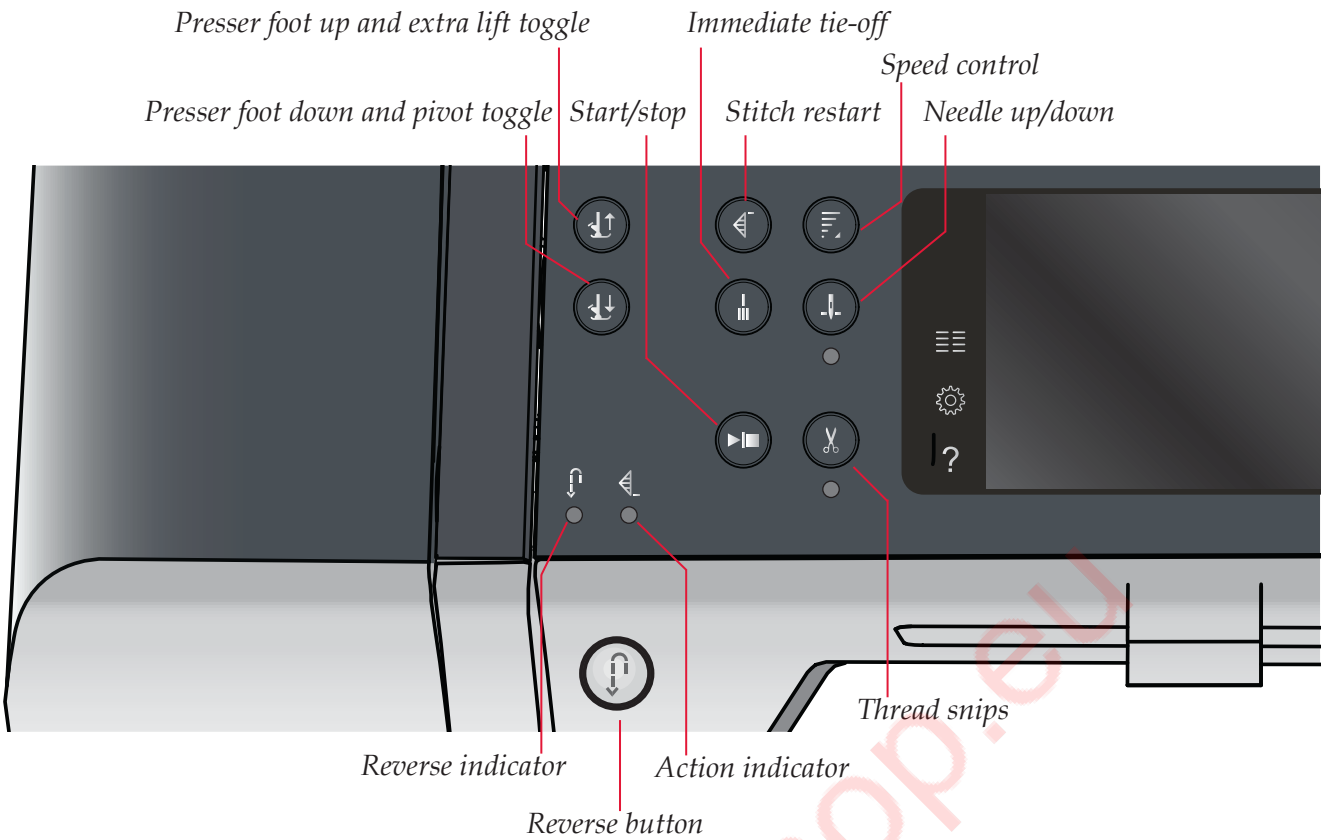

Buttons and indicators

Presser foot up and extra lift toggle

Touch this button to raise the presser foot. Press the button once more and the presser foot will raise to extra lift position and the needle will raise to up position.

Presser foot down and pivot toggle

Touch this button to lower the presser foot completely. Press the button once more to raise the presser foot to pivot height. The presser foot is lowered automatically when you start to sew.

Stitch restart

When you have stopped sewing in the middle of a stitch, press stitch restart to return to the beginning of the stitch again without having to reset any special settings you have made.

If pressing the stitch restart button while sewing, the stitch will be finished and the machine will then stop.

Speed control

This function enables you to easily reduce the sewing speed. Just touch the speed control button to reduce the speed by half. To return to normal speed, deselect the button.

Long press on the button and use the slider to choose from four different speed levels.

Set desired speed limit using the slider, then close the pop-up. The next time you touch the speed control button, the speed will be reduced to the limit you have chosen. The limit will be shown at the top left corner on the screen. You can sew without closing the pop-up.

Immediate tie-off

Press immediate tie-off while sewing and your machine sews a few tie-off stitches and stops automatically.

By touching the tie-off button once more while the action indicator is lit, the function can be turned off.

The tie-off function can be programmed, see page 4:10.

Needle up/down

Press this button to move the needle up or down. The setting of the needle stop position is changed at the same time. When needle down is activated, the indicator underneath the button is lit, the needle will stop in the down position and the presser foot will raise to pivot height.

You can also tap the foot control to raise or lower the needle.

www.sewshop.eu

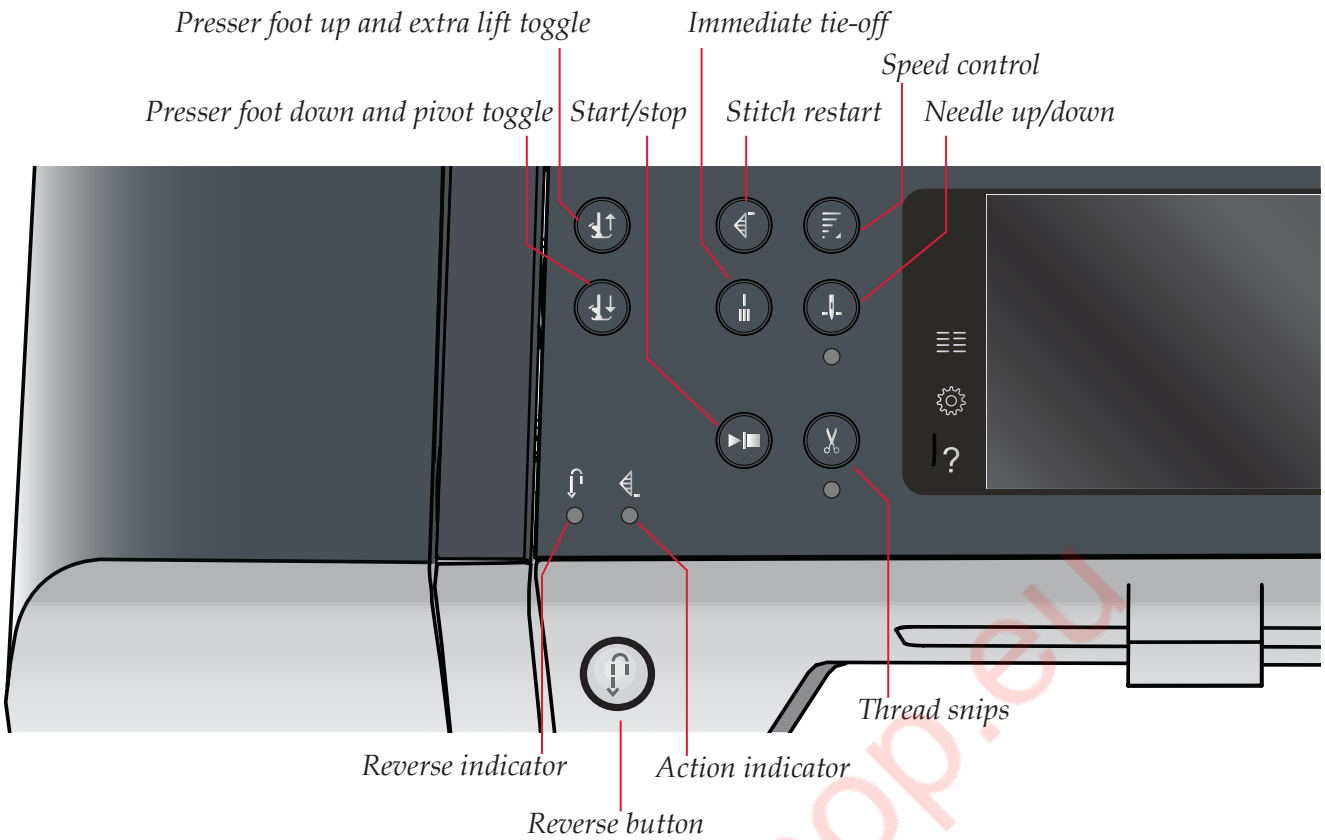

Start/stop

Press this button to start or stop the machine without using the foot control. Press the button once to start and press it again to stop.

Thread snips

Press to cut both needle and bobbin thread immediately.

If pressing this button while sewing, the machine will complete the stitch and cut the threads before the needle moves to the start position of the next stitch. Your machine ties off the thread, cuts the needle and bobbin threads and raises the presser foot and the needle.

The thread snips function can be programmed, see page 4:10.

Note: The presser foot will not raise after thread snips if automatic presser foot lift has been deactivated in the settings menu.

Thread snips performed by the machine can be cancelled in the settings menu.

Reverse button

For permanent reverse, press the button once before starting to sew. The reverse indicator will be lit and the machine sews in reverse until you press the button again to cancel. If you press the reverse button while sewing, the machine sews in reverse for as long as you keep the button pressed. The reverse indicator is lit when the reverse button is pressed.

Reverse is also used when sewing manual buttonholes, darning stitches, programmed tie-off end and tapering stitches.

Reverse indicator

The reverse indicator will be lit when pressing the reverse button to sew in reverse. It is also lit while sewing permanent reverse.

Action indicator

The action indicator is lit to indicate that an action is to be done, for example performing tapering. The indicator stays lit until the action is done.

www.sewshop.eu

www.sewshop.eu

Sewing mode 4

www.sewshop.eu

Sewing mode

In sewing mode you can select stitches, adjust and sew them. The selected stitch is shown in actual size in the stitch field. Recommendations and machine settings are shown at the top of the touch screen.

Every mode in the PFAFF® Color Touch Screen has its own color scheme, to make it easier to navigate and use the machine.

Start view

When your machine is turned on, a start-up screen is shown and then the machine opens sewing mode.

Sewing mode - overview

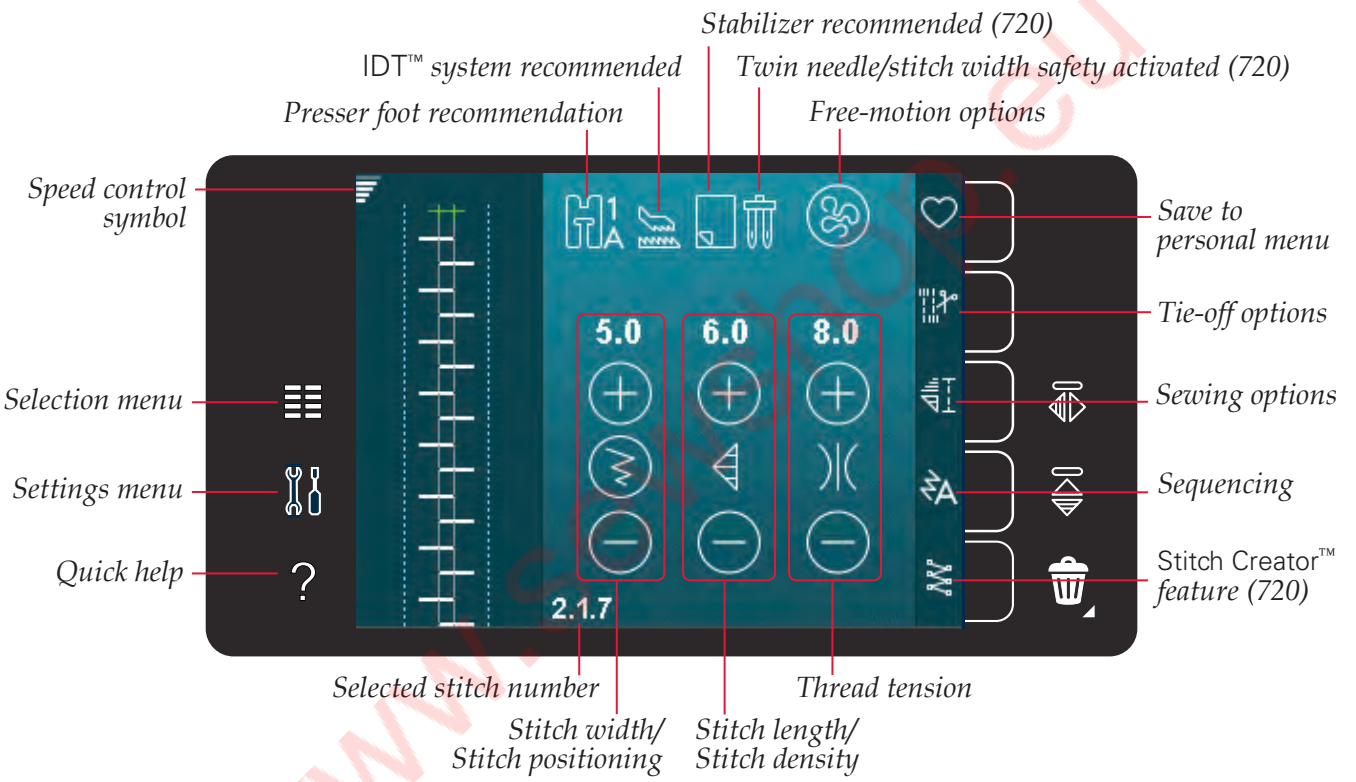

Note: All symbols and options will not be shown at the same time.

www.sewing.eu

Selection menu

To enter selection menu, touch selection menu icon at the left. The selection menu contains a selection bar at the right with icons for stitches, stitch fonts, personal files and USB device. Read more about personal files and USB device in chapter 7.

When a stitch or font is selected, the selection menu will close automatically. A selected stitch font opens in the sequencing window.

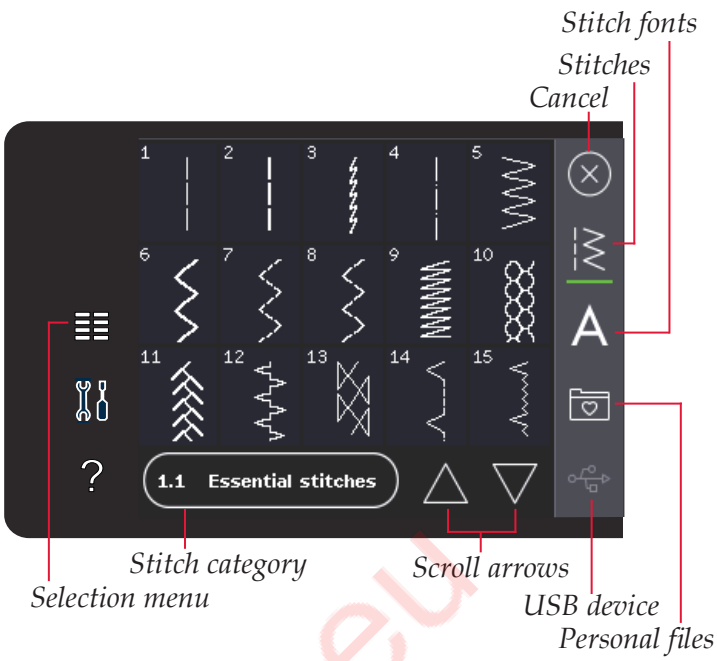

Selecting a stitch

Select a stitch by touching the desired stitch on the screen. Use the scroll arrows to scroll in the list of stitches.

To view all categories, touch the stitch category icon. For each category, there are two or more subcategories. For each subcategory a list of stitches is shown.

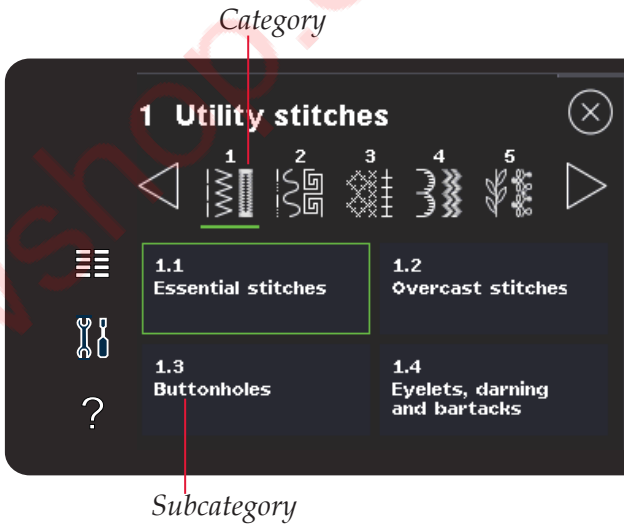

Selecting a font

Text can be created with stitch fonts. To load a stitch font, open the selection menu. Select stitch fonts from the selection bar. Your machine contains four built-in stitch fonts. The number to the right of each font shows the font size. Select a font by touching it. A selected stitch font opens in sequencing. Read more about sequencing in chapter 5.

www.sewshop.eu

Stitch settings

Your machine will set the best settings for each selected stitch. You can make your own adjustments on the selected stitch. The setting changes will only affect the selected stitch. Your changed settings will be reset to default when selecting another stitch. The changed settings are not automatically saved when turning your machine off. You can save an adjusted stitch in a personal menu to keep the adjustments.

For some stitches you can change more than one setting in each setting control. This will be indicated by a button symbol in the middle of the control. Touch the button symbol to toggle between different stitch settings.

If a stitch can be balanced, a long touch symbol appears in the lower right corner in the middle of the control. Long touch the button symbol to open balance setting.

Note: Some stitches can be balanced but can not toggle between two stitch settings (width/positioning) and/or (length/density). If touching once on a button symbol with a long touch the stitch control will not change its appearance. This indicates that the selected stitch cannot toggle between the two stitch settings.

Note: When trying to exceed minimum or maximum settings for the stitch controls, a warning sound will be heard. The default value is shown in white.

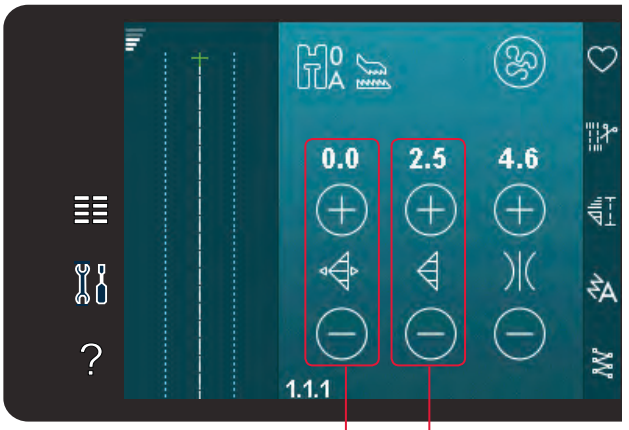

Stitch length/Stitch density

Stitch width/Stitch positioning

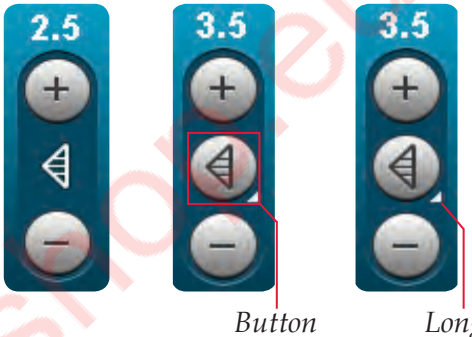

Button symbol

Long touch

Stitch width

Increase or decrease the stitch width using + and -. The number above the control shows stitch width in mm.

Stitch width

Stitch positioning

For certain stitches the stitch positioning icon is shown instead of the stitch width control. Use + to move the needle to the right and - to move the needle to the left. The number above the control shows the needle position in mm in relation to center needle position. For straight stitches the machine has 37 needle positions.

It is possible to change the needle position of all stitches that are less than 9 mm wide. Touch the button symbol in the middle of width/position control to toggle between stitch width and stitch positioning. The stitch position can only be changed to the limit of the maximum stitch width. Changing the stitch position will also limit the stitch width adjustment.

Stitch positioning

www.sewshop.eu

Stitch length

Increase or decrease the stitch length using + and -. The number above the control shows stitch length in mm. If lengthening a zigzag stitch or a decorative stitch, the entire stitch will be longer. If lengthening a satin stitch where the density can be adjusted, the entire stitch will be longer but the density will remain the same.

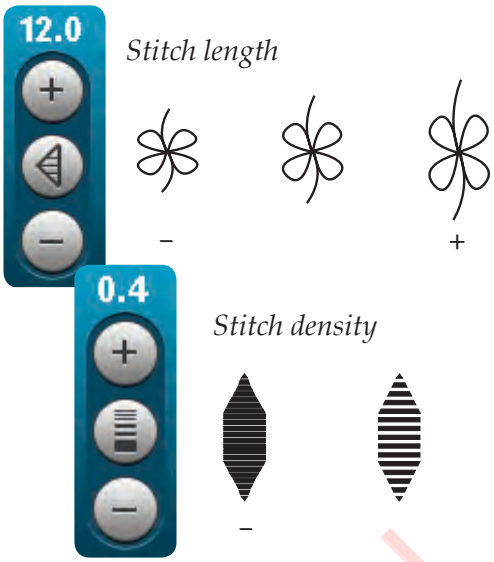

Stitch density

The stitch density control adjusts the density (the closeness of the satin stitches that make up the entire stitch). The density does not affect the actual length of the entire stitch.

Touch + to decrease the density. Touch - to increase the density. The number above the control shows the distance between satin stitches in mm.

Note: This is often used with specialty threads and when a less dense satin stitch is desired.

Balance

When sewing on special fabrics or doing a special technique, the balance may need to be adjusted. If a stitch can be balanced, a long touch symbol will appear in the stitch controls.

To ensure a good result, start with sewing a test sample on the fabric you will use. To activate forward/backward balance, long touch the stitch length/density control. To activate side to side balance, long touch the stitch width/positioning control. Use the + and - icons to adjust the balance of the stitch.

Note: Buttonholes can also be balanced.

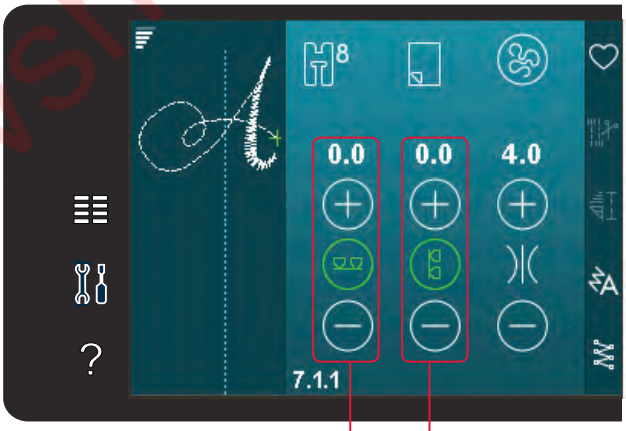

Balance forward/backward

Balance side to side

www.sewshop.eu

Thread tension

Your machine automatically sets the best thread tension for the selected stitch. The thread tension can be adjusted for specialty thread, techniques or fabric. Touch + to increase and - to decrease the needle thread tension.

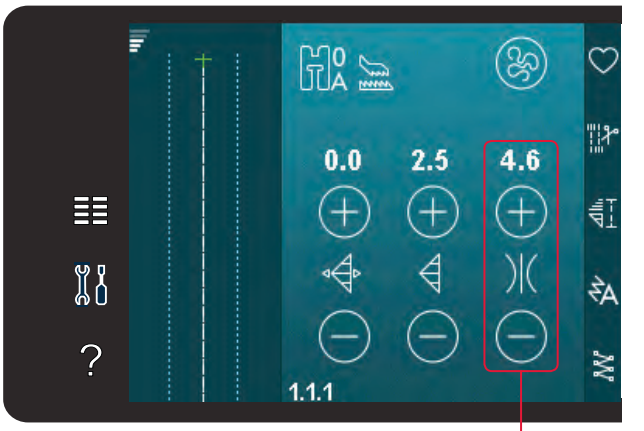

Thread tension

Correct and incorrect thread tension

For the best stitch appearance and durability make sure the needle thread tension is correctly adjusted, i.e. for general sewing, the threads evenly meet between the two fabric layers (A).

If the bobbin thread is visible on the top side of the fabric, the needle thread tension is too tight. Reduce the needle thread tension (B).

If the needle thread is visible on the back side of the fabric, the needle thread tension is too loose (C). Increase the needle thread tension.

For buttonholes and decorative stitches the needle thread should be visible on the underside of the fabric (C). Reduce the needle thread tension to bring the needle thread back side of the fabric.

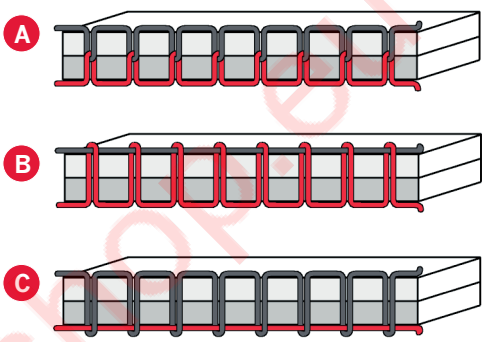

Mirroring

To mirror a stitch or sequence horizontally, touch the mirror side to side icon. To mirror vertically, touch the mirror end to end icon.

Note: Buttonholes cannot be mirrored.

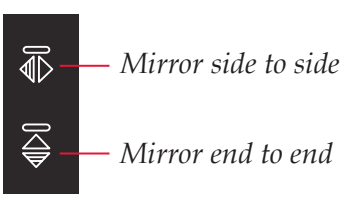

www.sewshop.eu

Save to personal menu

To save a stitch, touch the save to personal menu icon in sewing mode. You will find saved stitches in category 10, personal menu. Each subcategory in the personal menu has 10 positions to save your own stitches or sequences. Choose the subcategory you want to save your stitch in. All your previously saved stitches will be shown in the personal menu.

You can scroll through the personal menus to find a free position, using the scroll arrows. Any box without a stitch is a free position and can be used to save your new stitch. Simply touch the position and your stitch is saved.

Any box with a stitch is an occupied position. You can overwrite a previously stored stitch. Simply touch the stitch to overwrite. A pop-up will appear to confirm that you want to overwrite the previously stored stitch. Cancel the saving process by touching the cancel icon. The saving window will close and you will return to the previous screen.

Delete a stitch

If you want to delete one stitch, first touch delete (A). A highlighted green delete symbol (B) will appear at the lower right to indicate that delete is active. Then touch the stitch you want to delete. The positon will be emptied. To abort the deletion before selecting a stitch, touch delete again.

Long touch delete to empty the whole subcategory that is selected.

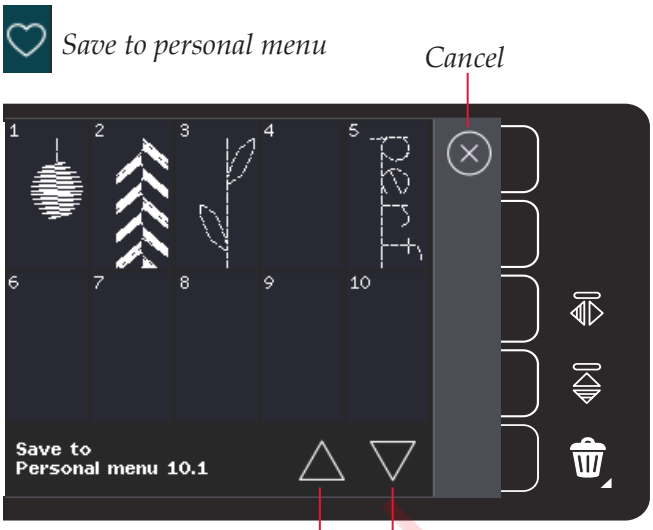

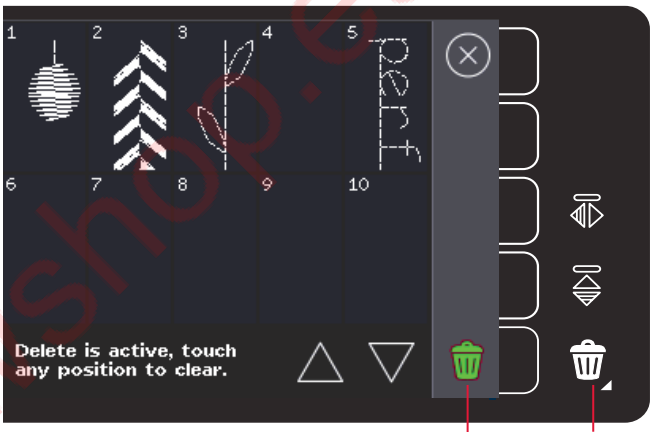

Delete (A)
Delete symbol (B)

www.sewshop.eu

Free-motion options (720)

All stitches on your machine can be sewn in free-motion to create fantastic effects.

Touch the free-motion options icon to open a window where you can select between three different free-motion options. The selected free-motion option is shown at the top of the screen by a free-motion options symbol. Use quick help on the symbol for information about the current setting.

For all free-motion sewing the feed dogs will lower automatically and the fabric must be moved manually.

Note: Make sure that the IDT™ system is disengaged.

Read more about free-motion sewing on page 4:20

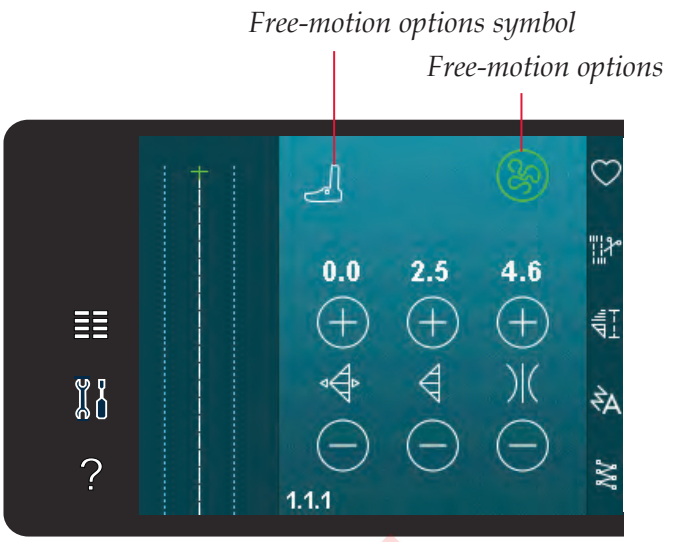

Dynamic spring foot 6D free-motion

Activate to set the machine in Dynamic spring foot free-motion mode for the Dynamic spring foot 6D (optional accessory, part number 820991-096). The Dynamic spring foot measures the fabric thickness and will raise and lower with each stitch to hold the fabric on the needle plate while the stitch is being formed.

Note: The Dynamic spring foot 6D is recommended for use with straight stitch. Activate Stitch width safety in Machine settings.

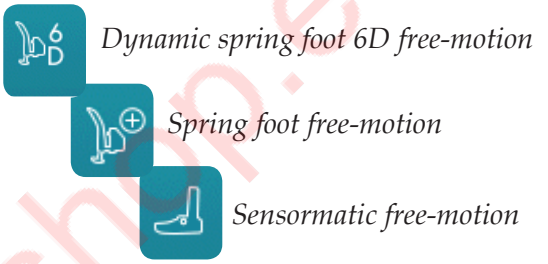

Spring foot free-motion

Activate to set the machine in Spring foot free-motion mode for optional spring feet. A spring foot will raise and lower with each stitch to hold the fabric on the needle plate while the stitch is being formed.

Note: Optional spring feet can be purchased at your local authorized PFAFF® dealer.

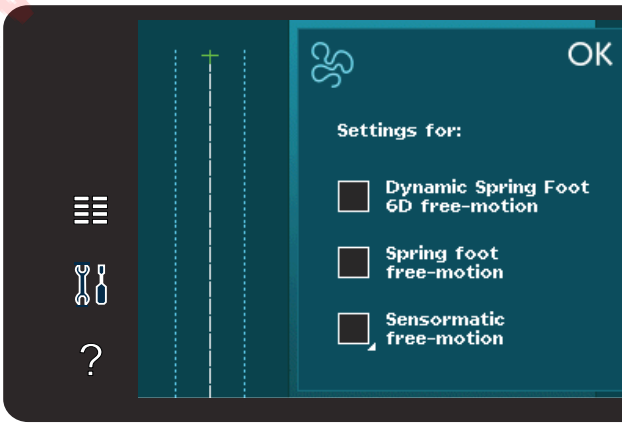

www.sewshop.eu

Sensormatic free-motion

Activate to set the machine in Sensormatic free-motion mode for, e.g. Embroidery/Sensormatic free-motion foot 6A.

When sewing free-motion at low speed the presser foot will raise and lower with each stitch to hold the fabric on the needle plate while the stitch is being formed. At higher speed, the presser foot floats over the fabric while sewing.

Skipped stitches can occur if your fabric moves up and down with the needle as you are stitching. Lowering the presser foot height will reduce the space between the presser foot and the fabric and eliminate the skipped stitches.

To adjust the presser foot height in Sensormatic free-motion mode, long touch the check box and make adjustments in the pop-up.

Note: Be careful not to reduce the presser foot height too much. The fabric must still move freely under the presser foot.

Do not use a spring foot if Sensormatic free-motion is activated, since the needle might damage the presser foot.

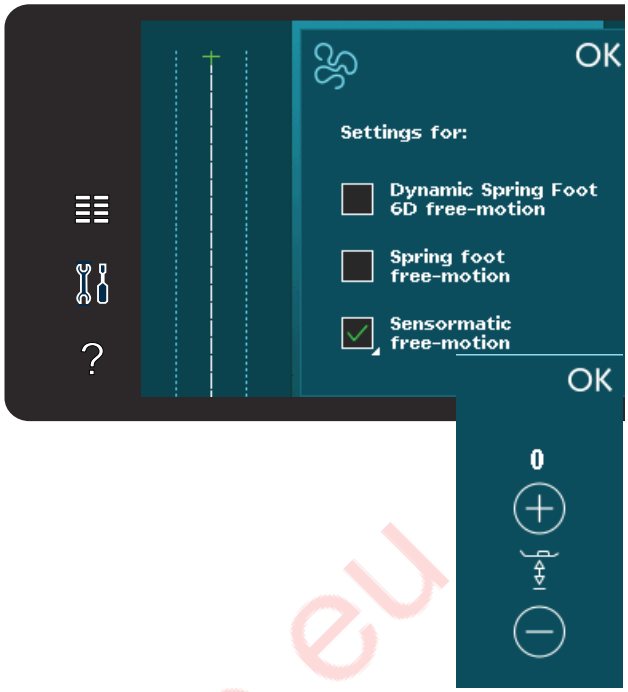

Presser foot height

www.sewshop.eu

Tie-off options

When touching the tie-off options icon, a foldout opens to let you select three different functions; tie-off beginning, tie-off end and thread snips.

When you have activated your settings, you can hide the three icons by touching the tie-off icon on the option bar again. The tie-off options icon will show your settings by changing the color of the chosen function. The settings will remain active until you switch them off.

Note: For immediate tie-off, use the Immediate tie-off button, placed on the front of the machine among the buttons.

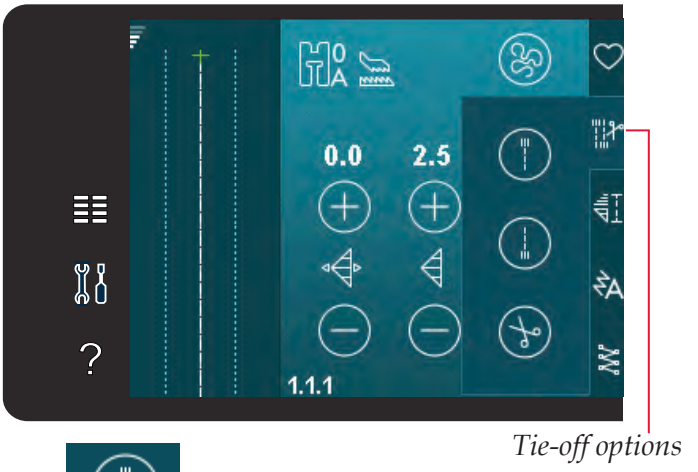

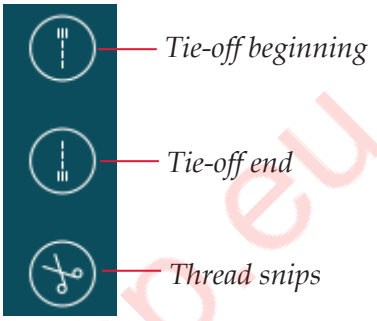

Sewing with tie-off options selected

1. The tie-off beginning will be performed as soon as you start to sew.
2. Press the reverse button to perform tie-off end. The action indicator will be lit. The machine will finish the stitch and do a tie-off.

   When a thread snip is programmed, the machine will automatically cut the threads after performing the tie-off end. The needle and presser foot will raise.

   Note: To activate reverse sewing, stop sewing and press the reverse button. The reverse indicator will be lit. No tie-off will be performed.

   Press the reverse button when sewing in reverse to activate tie-off end. Both the reverse indicator and the action indicator will be lit.

   To go back to sewing forward, stop sewing in reverse and press the reverse button. No indicators will be lit and no tie-off will be performed.

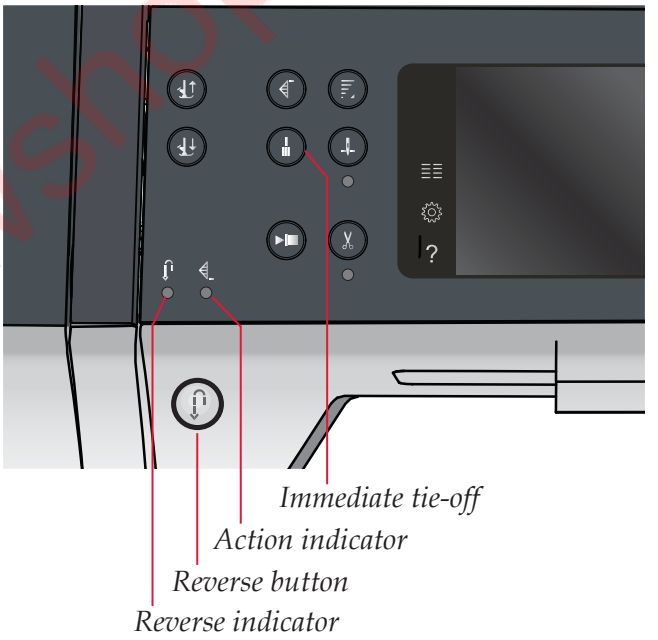

www.sewshop.eu

Sewing programs

These options let you activate tapering, single stitch and patchwork programs. You can sew without closing this pop-up.

Note: Not all programs can be used at the same time.

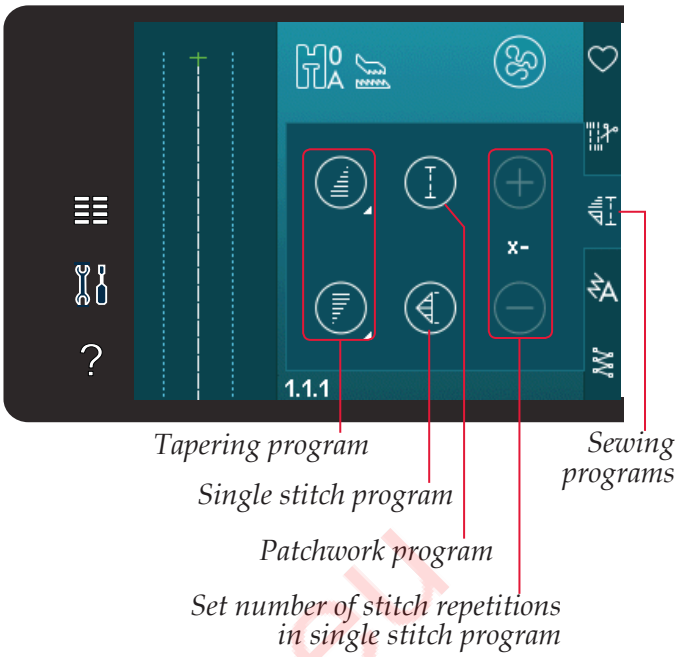

Tapering program

Tapering increases or decreases the width of the stitch during sewing to create symmetrical or asymmetrical tapers.

Activate tapering by selecting either of the tapering icons. The default angle is 45 degrees. Long touch a tapering icon to view the angle choices for that taper. Select one angle for the beginning taper and the same angle or a different one for the end taper.

If tapering is deactivated and then activated again, the angle will be set to the previously selected angle.

When tapering is activated at both the beginning and at the end and you start to sew, the stitch width will start at 0mm. It becomes wider until the selected stitch width is reached. Sew your desired length and press the reverse button. The width is reduced until the width is 0mm and the action indicator on the machine will be lit until the taper is finished.

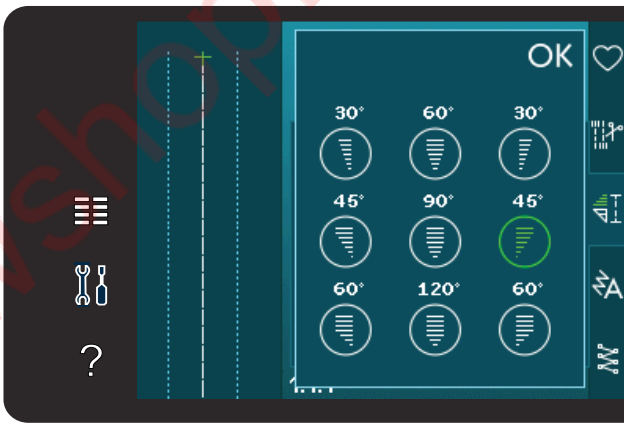

Pop-up for tapering program

Single stitch program (720)

Activate the single stitch program by touching the icon. The single stitch program lets you decide how many repetitions of the stitch you want to sew.

Set the number of repetitions using the icons on the right. The number of repetitions chosen is shown between the + and - icons. The machine will stop automatically when the repetitions are sewn.

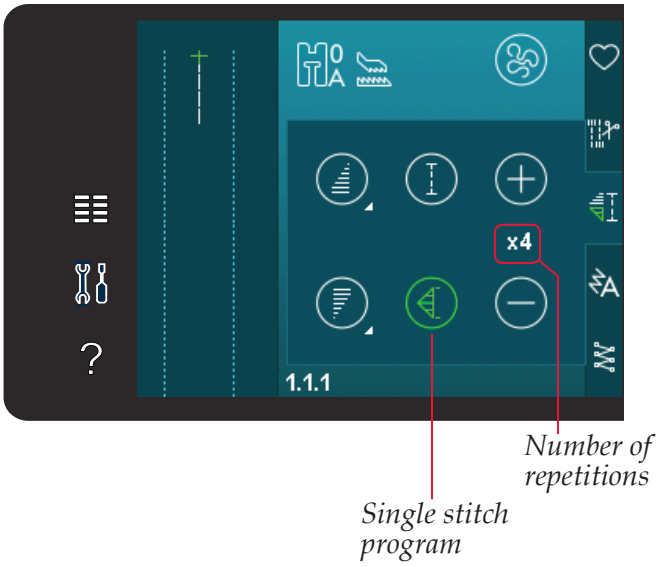

www.sewshop.eu

Patchwork program (720)

The patchwork program makes it possible for you to program an exact seam length that can be sewn repeatedly. This is very useful when quilting.

To program a seam length, activate the patchwork program. Sew your desired seam length and press the reverse button. The action indicator on the machine will be lit until the last repetition of the stitch is finished. This will set the length of the seam.

After you have programmed the patchwork sequence, the patchwork program icon is inactive. The single stitch program is now activated instead.

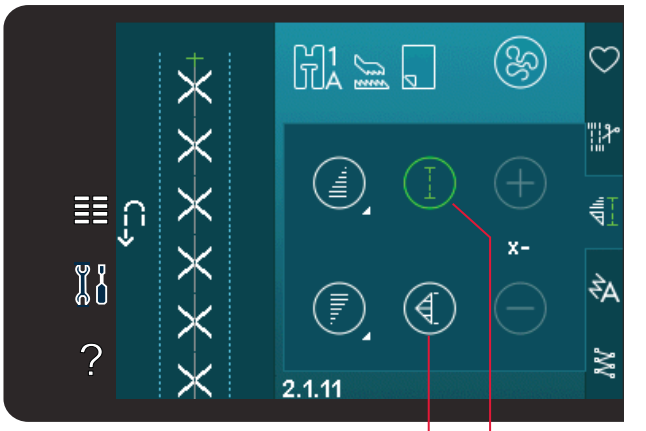

Singel stitch program
Patchwork program

Combining Tapering and Patchwork or Single stitch programs

Combining Tapering and Patchwork or Single stitch programs makes it possible to repeat a tapered seam with the same length.

Activate tapering by selecting any of the tapering icons then activate Patchwork by touching the icon. Follow the instructions for tapering on the previous page. When the reverse button is pressed the action indicator will be lit until the taper and last repetion of the stitch is finished.

The stitch is now programmed and the single stitch program is activated. When you start to sew again the stitch will automatically be repeated with the same length.

Between the + and - icons the number of repetitions in the program is shown. Use the + and - icons to adjust the length of the seam.

Note: The tapering is included in the repetitions shown on the screen.

Sequencing

Touch this icon to open sequencing. In sequencing you can create and adjust a sequence of stitches and letters. Read about sequencing in chapter 5.

Stitch Creator™ feature (720)

Touch this icon to open Stitch Creator™ feature. Stitch Creator™ feature allows you to create your own 9mm stitches or edit built-in stitches. Every single stitch point can be edited. Read about Stitch Creator™ feature in chapter 6.

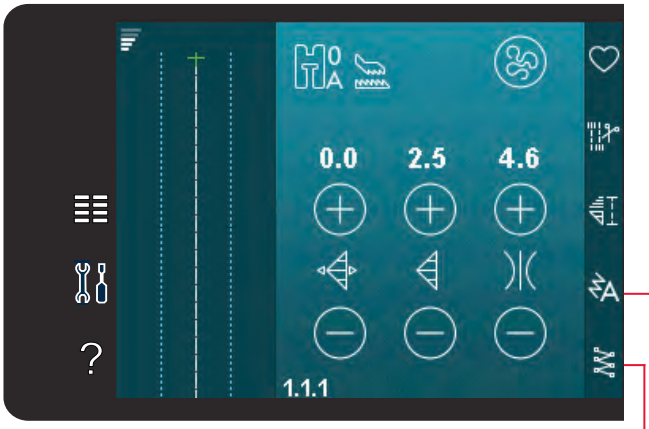

Stitch Creator™ *feature*
Sequencing

www.sewshop.eu

Sewing techniques

These techniques may require some special presser feet and accessories.

Sewing in zippers

There are different ways to sew in zippers. Follow the directions included with your pattern for best results.

For some types of zippers it is important to sew close to the teeth of the zipper. The zipper foot 4 can be snapped to the presser foot bar on the left or right, depending on how you will insert your zipper. Then set the stitch position so that it enters close to the edge of the zipper teeth by using one of the 37 needle positions available for the straight stitch.

Note: If the presser foot is attached on the right side of the presser foot bar, the needle must only be moved to the left. If the foot is attached on the left side of the presser foot bar, the needle must only be moved to the right.

Right side

Left side

Sewing hems in heavy fabric

When sewing over seams in extra heavy fabric or a blue jeans hem, the presser foot can tip as the machine climbs over the seam.

Use the multipurpose tool to balance the height of the presser foot as you sew. One side of the tool is thicker than the other. Use the side that suits the thickness of the seam best. Engage the IDT™ system, see page 2:8. Sew your chosen hem stitch until you reach the crossing seam. Lift the presser foot and place the multipurpose tool under the presser foot from behind before you stitch across. At the thickest point on the fabric, slow down the sewing speed. When at the highest point of the seam, place the multipurpose tool under the presser foot in front and continue stitching until you have sewn passed the hem.

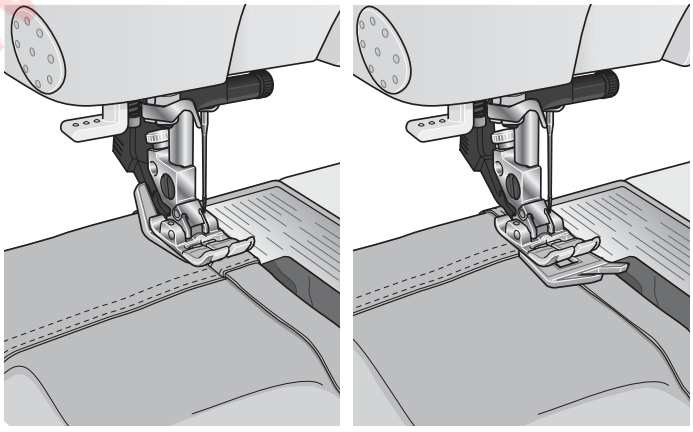

Tip! Increasing the stitch length may improve the sewing result when sewing hems in heavy fabric.

www.sewshop.eu

Three-step zigzag stitch

Stich number 1.1.7 can be used to overcast raw edges. Make sure the needle pierces the fabric on the left side and overcasts the edge on the right side.

Stitch number 1.1.7 can also be used as an elastic stitch to attach elastic to pajamas, skirts and sportswear.

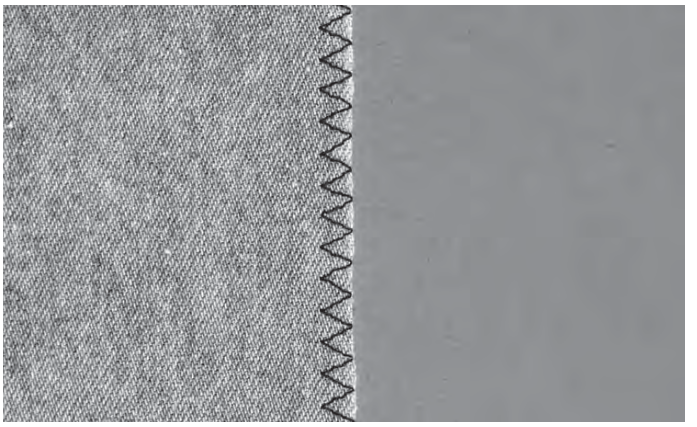

Blindhem stitch

The blindhem stitch number 1.1.14 is used to make invisible hems on skirts, trousers and home decor. Use foot number 3 with IDT™ system.

- Finish the edge of the hem.
- Fold and press the hem allowance to the wrong side.
- Fold the hem back on itself so approximately 3/8" (1 cm) of the finished edge extends beyond the fold. The wrong side of your project should now be facing up.
- Place the fabric under the presser foot so that the fold runs along edge guide A.
- When the needle swings into the fold it should catch a small amount of fabric. If the stitches are visible on the right side, adjust edge guide A by turning adjusting screw B until the stitch that catches the hem just barely shows.

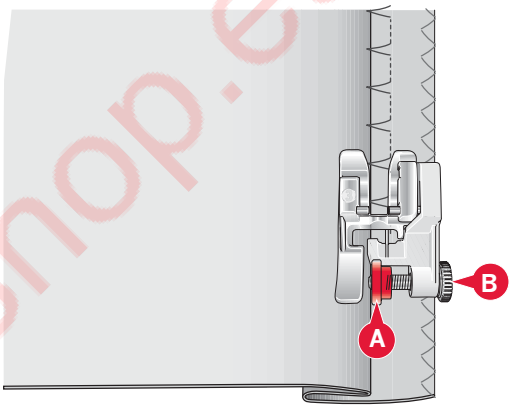

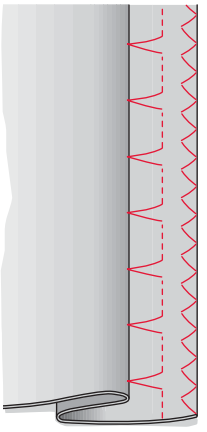

Blindhem stitch number 1.1.14

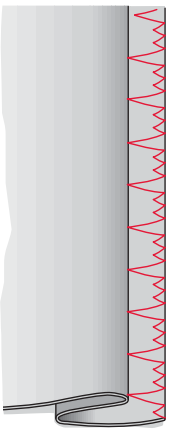

Elastic blindhem stitch number 1.1.15

Elastic blindhem stitch

The elastic blind stitch number 1.1.15 is especially suitable for stretchy fabrics, because the zigzag in the stitch lets the stitch stretch. The hem is finished and sewn at the same time. There is no need to finish the raw edge first on most knits.

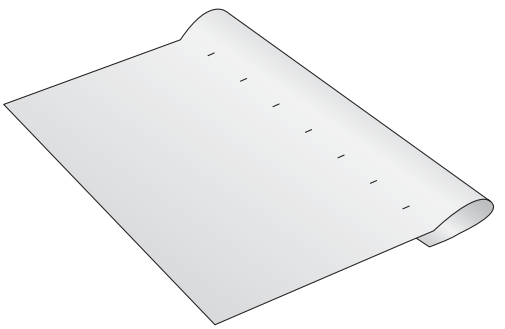

www.sewshop.eu

Buttonholes

Buttonholes are found in category 1, subcategory 1.3 in the selection menu.

Note: Buttonholes up to 50mm can be sewn using the Sensormatic buttonhole foot 5A. Both sides of the Sensormatic buttonhole are sewn in the same direction for a more even result.

Buttonholes over 50mm are sewn manually in four steps with presser foot 5M.

The direction of the stitches being sewn will be indicated on the screen by an arrow next to the buttonhole.

To sew a buttonhole, first attach the correct foot, then select your buttonhole. To ensure a good result, start with sewing a test sample on the fabric and stabilizer you will use.

Note: Make sure that the IDT™ system is disengaged.

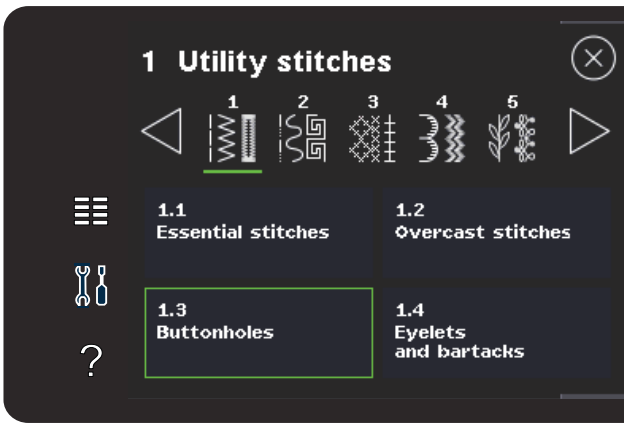

Attaching the Sensormatic buttonhole foot

1. Snap on the Sensormatic buttonhole foot.
2. Plug the cord into the socket found to the left above the needle area, behind the needle threader (A).

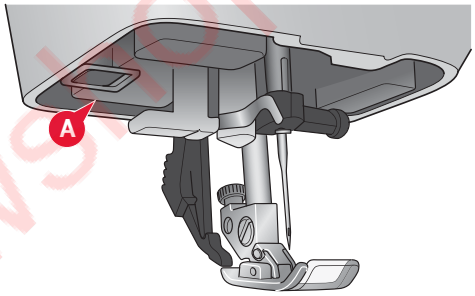

Sensormatic buttonhole

When you sew a buttonhole with the Sensormatic buttonhole foot, adjust the slit length so that it is slightly larger than the size of the button. You can measure your button using the button ruler on the lid.

Set the slit length using the + and - symbols. Place your fabric under the foot, making sure that the red arrow lines up with the notch on the foot (B). Start sewing by pressing the foot control or start/stop button. The buttonhole will be completed automatically and the threads are cut. You can repeat the buttonhole as many times as you wish.

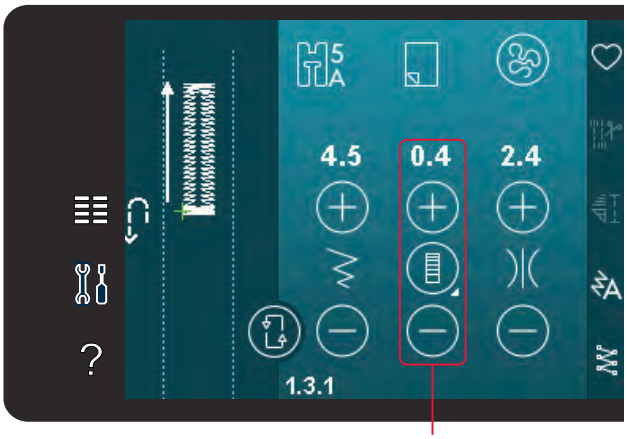

Slit length

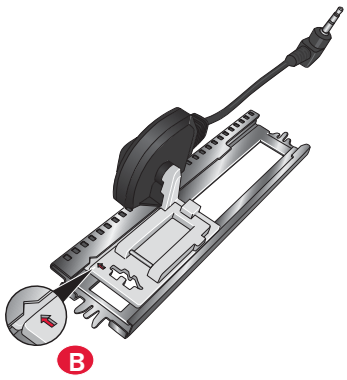

www.sewshop.eu

Manual buttonhole

To sew a manual buttonhole, use presser foot 5M. Sew the first column as long as you want the buttonhole. Touch the reverse button. The machine sews the bartack and the second column. When the columns are aligned, press the reverse button to sew the second bartack.

Repeat a manual buttonhole

When you have adjusted your buttonhole, use the repeat buttonhole function to sew identical copies. As long as that icon is selected, the machine will repeat the buttonhole over and over again. Repeat buttonhole is only visible when sewing a buttonhole manually.

To cancel the function, just deselect the icon.

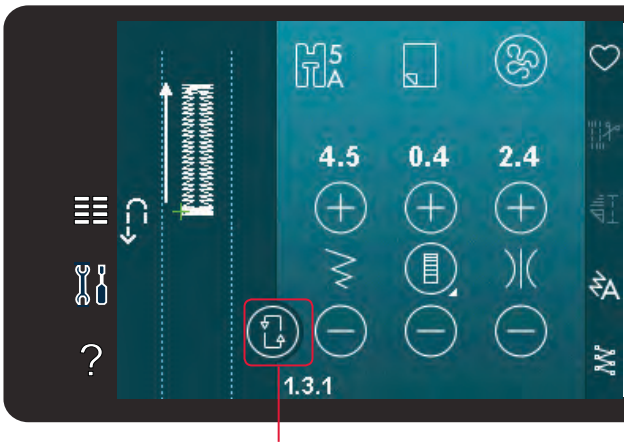

Repeat buttonhole

www.sewshop.eu

Corded buttonhole

Corded buttonholes that are sewn with gimping thread or cord are more stable, durable and have a professional appearance.

1. Place the center of a length of gimping thread over the metal bar extending from the center back of the Manual buttonhole foot 5M. Pass the thread ends under the foot to the front of the foot.
2. Snap on the Manual buttonhole foot 5M.
3. After completing the buttonhole, pull the ends of the gimping thread until the loop of thread is hidden below the buttonhole bartack.
4. Thread the gimping threads into a needle and pull them to the wrong side of the garment. Tie the gimping threads and cut off the excess thread.

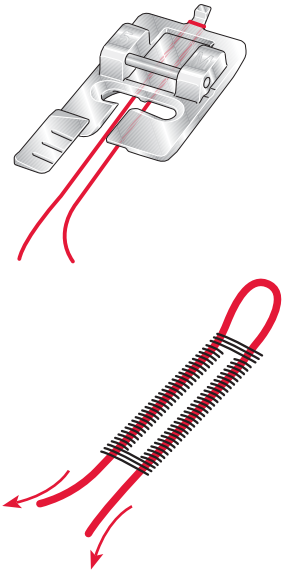

Sew on a button

To sew on a button, remove the presser foot and select the sew on button stitch. The feed dogs will automatically be lowered.

Place the button under the presser foot holder. Use the mirror side to side icon to make sure the holes in the button are aligned with the swing of the needle and the width is appropriate for the actual button. If needed, change the stitch width to align with the holes in the button with the stitch width control.

If needed, increase or decrease the number of stitches that will fasten the button on the fabric, using the button stitch repetition icons. Start to sew. The machine will sew the program for you.

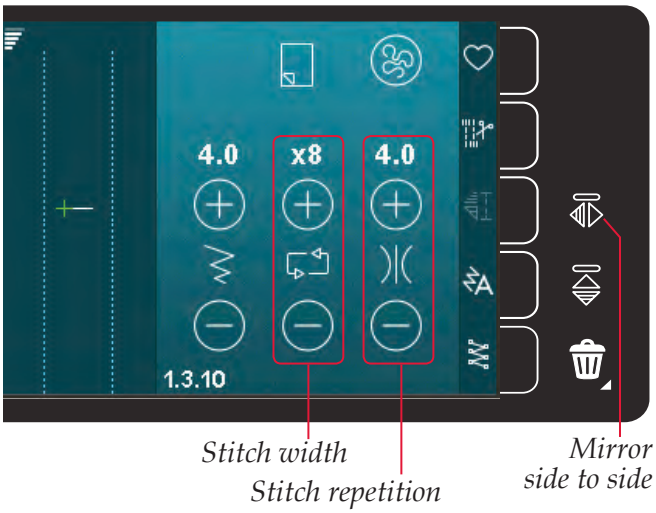

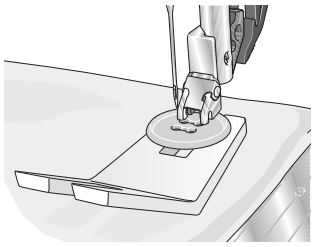

Note: Use the multi-purpose tool to create a thread shank for your button. You can also use a sew on button foot, available as an optional accessory at your local authorized PFAFF® dealer.

Darning

Darning a small hole or a tear before it becomes larger can save a garment. Choose a lightweight thread in a color as close to your garment as possible.

1. Place fabric or stabilizer in position under the hole or tear in your garment.
2. Select a darning stitch.
3. Start sewing above the hole at the left side.
4. Once you have sewn down the length of the hole, press the reverse button to set the length of the stitch. Your sewing machine will automatically complete the stitch.
5. By default, the machine will be set to repeat the same size darning square; just continue sewing.

   The repeat icon will be highlighted, indicating that repeat is activated. Touch the repeat icon to deactivate repeat.

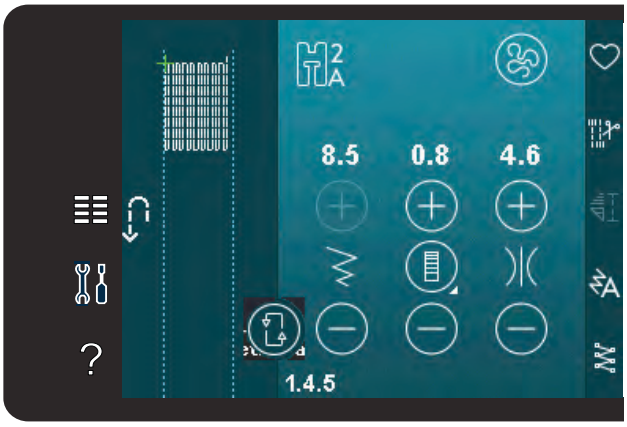

www.sewshop.eu

Quilting

A quilt usually consists of three layers, two layers of fabric with a layer of batting sandwiched between.

To sew three layers together, you have a wide variety of stitches and techniques to choose from.

Straight stitch needle plate (720)

Attach the straight stitch needle plate when piecing your quilt. The smaller hole in the straight stitch needle plate supports the fabric closer to the needle and helps prevent the fabric from being pulled down into the bobbin area, especially at the beginning and/or end of a seam.

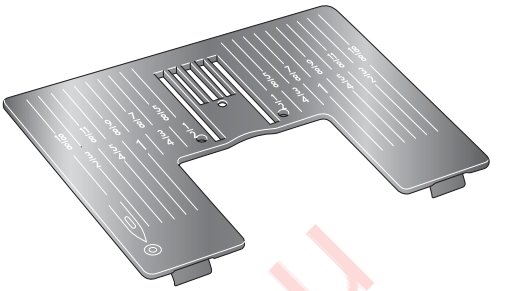

Patchwork program

The patchwork program makes it possible for you to program an exact seam length that can be sewn repeatedly. This is very useful when quilting, especially when piecing many quilt blocks of the same size.

See page 4:12 on how to use the patchwork program.

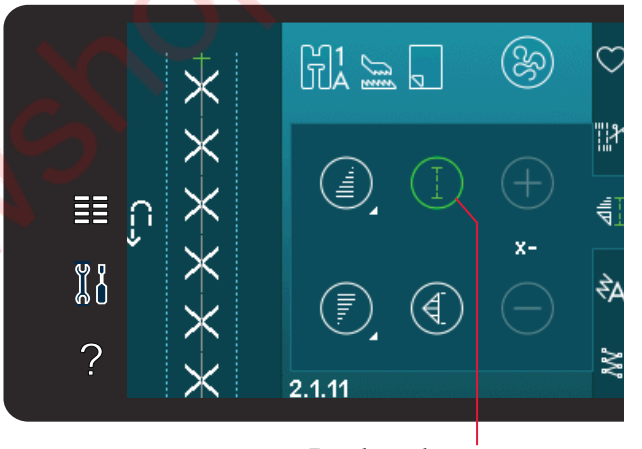

Patchwork program

Piecing the quilt top

Cut out the pieces of fabric for your quilt top with a seam allowance of ¼" (6mm). Snap on the ¼" quilting foot with IDT™ system; position the fabric under the foot so that the cut edge is aligned with the outer edge of the toe of the foot.

Press the seam flat to lock the stitches, then open the pieces and press the seam allowance to one side. When possible, press seam allowances towards the darker fabric.

Assemble the pieces according to the pattern instructions. Layer the pieced quilt top with batting and backing. Pin baste the layers together in preparation for quilting.

www.sewshop.eu

Handlook quilting

1. Baste the completed quilt top to the batting and backing.
2. Thread the needle with an invisible (monofilament) thread. Use contrasting or matching rayon or cotton thread in the bobbin.
3. Snap on the recommended foot shown in the sewing recommendations view.
4. Engage the IDT™ system.
5. Select one of the handlook quilt stitches 2.1.1-2.1.15. These stitches are pre-set with a higher thread tension value to intentionally pull up bobbin thread and produce the desired "hand look" effect.

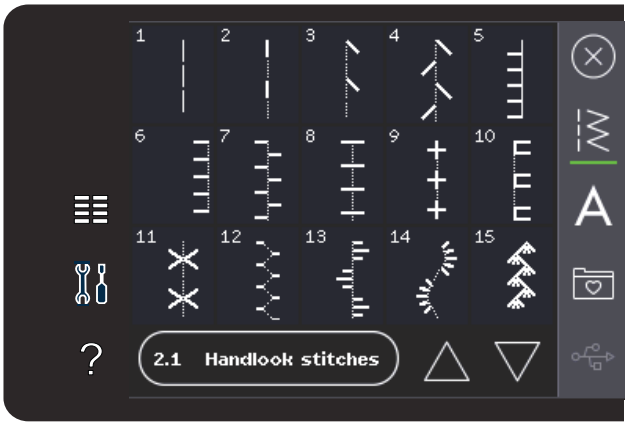

Note: Use needle size 90 and lightweight, soft cotton bobbin thread when sewing handlook quilt stitches. You might need to adjust the thread tension depending on which fabric, thread and batting that is used. Make a few tests on a scrap piece of the fabric you are going to sew and check the tension.

Stitch-in-the-Ditch

Stitch-in-the-ditch is another option for joining the layers of your quilt. Pin baste the layers as described above. Snap on the Fancy stitch foot 1A with IDT™ system and engage IDT™ system. Stitch in the seams of the quilt, using the red line on the presser foot as a guide.

Note: You can also use the optional presser foot, Stitch-in-Ditch w/IDT™ system P/N 820 925 096.

Crazy quilt stitching

Embellish your quilt with decorative stitches from stitch category 2.3. The stitches can be sewn in a coordinating or contrasting color, depending on the desired effect. Decorative threads like rayon embroidery or 30 wt cotton thread are sometimes used.

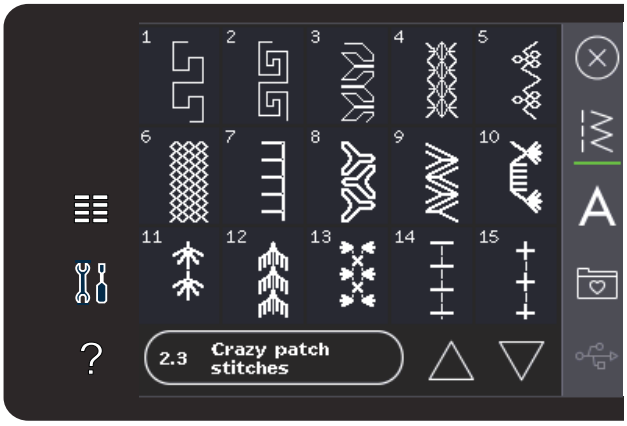

www.sewshop.eu

Free-motion stippling

Free-motion stippling adds texture and interest to your quilt, while keeping the layers together.

Free-motion stippling is done with the feed dogs lowered. You move the fabric manually to determine the stitch length.

1. Set your sewing machine for free-motion sewing with a straight stitch. Attach the straight stitch needle plate. Touch the free-motion options icon and select one of the three options. (720)

Note: Read about the different options on page 4:8.

2. Disengage the IDT™ system and attach the correct free-motion foot depending on which technique you have selected. A symbol of the foot for the selected setting is displayed at the top of the screen.
3. Begin by pin basting your quilt through all layers with safety pins, starting from the center of your quilt and working out. Place a pin every 6-8 inches (15-20cm).

Tip! Practice stippling on scraps of the fabric and batting from your quilt. It is important to move the fabric at the same rate as the sewing speed to prevent stitches that are too long or too short. Maintaining a consistent speed while free-motion sewing will also help keep stitches even. To get an even speed, lower the sewing speed and completely depress the foot pedal.

4. Begin near the center of your quilt. Take one stitch and pull the bobbin thread to the top of the quilt. Take a few stitches right next to one another to lock the threads. Activate Needle down.
5. Plan a path for your stitching, then begin stitching your desired stipple pattern, moving the quilt as you go. Continue stippling until all areas of the quilt top are filled.

Free-motion options symbol

Free-motion options

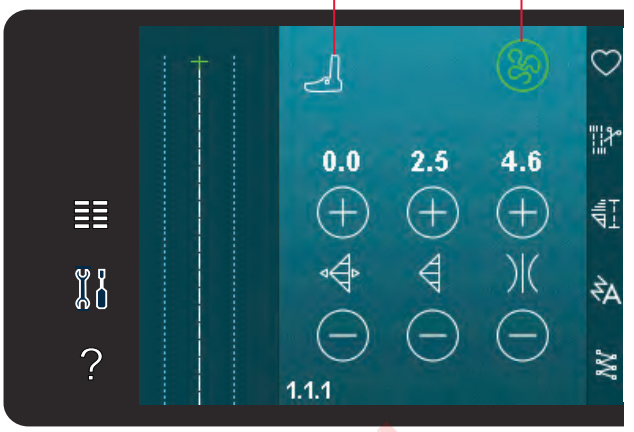

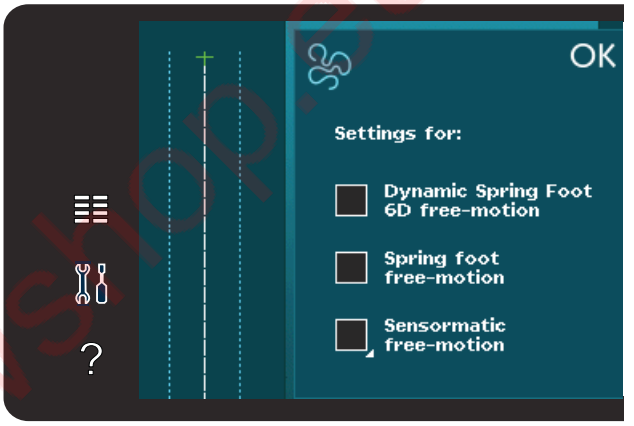

Dynamic spring foot 6D free-motion

Spring foot free-motion

Sensormatic free-motion

Special sewing techniques

The 6th stitch category includes special sewing technique stitches such as candlewicking, join and fold, three hole yarn, beading stitches and edge stitches. These techniques may require some special presser feet and accessories. This is indicated by the optional presser foot icon.

Note: Touch Quick help and then touch the selected stitch in the selection menu to find out which special presser foot is required for that stitch.

Optional presser foot icon

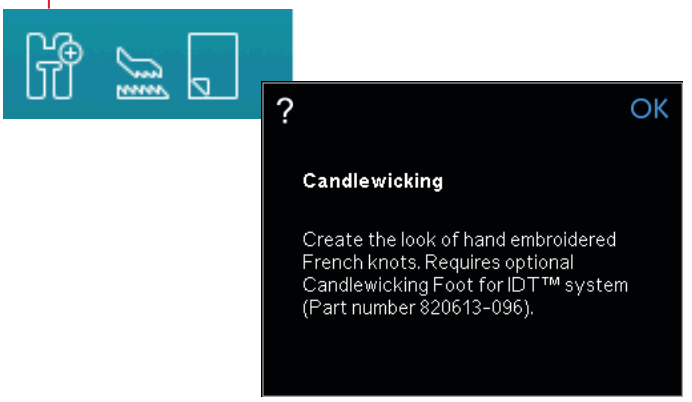

www.sewshop.eu

Stacking stitches (720)

Sew beautiful decorations in two colors using the stacking stitches. The stacking stitches consist of pairs of matching stitches that are designed to be sewn on top of each other.

Sew the first stitch and then sew the second, overlapping the first. Be sure to use the same starting point for each.

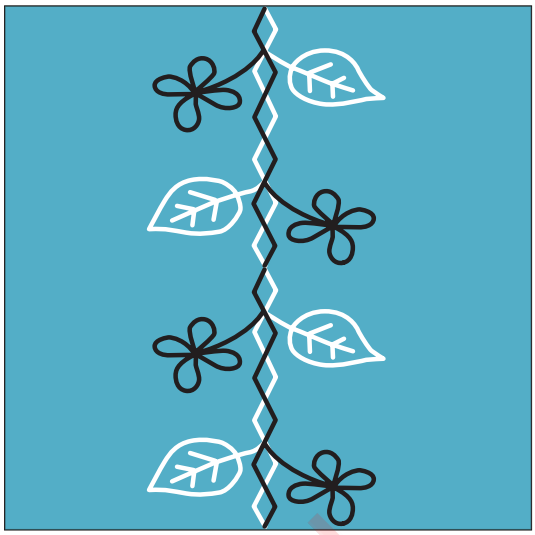

Single ribbon stitches (720)

Add dimensional elements to your decorative stitching with the beautiful single ribbon stitches in your machine. Narrow ribbons are woven into these special stitches as you sew. 2-5mm (approx. ⅛”-¼”) ribbons are recommended for this technique. For best results, use stabilizer, appropriate for your fabric type and weight, under your fabric to support your stitching.

1. Choose a single ribbon stitch in category 8.1. Activate needle down. Sew the first part of pattern, sewing until the machine stops automatically with needle down.
2. When you start to sew the stitch, it is important that you place the ribbon in front of the needle at the same angle as the first part of the stitch is sewn. See illustration 2. Continue sewing until the machine stops again.
3. Fold the ribbon over the stitching and pull it across the fabric so that it is directly in front of the needle again. Continue sewing until the machine stops. Fold the ribbon over again and position in front of the needle as before; continue stitching until the machine stops. Repeat this process until the desired length of stitching is achieved.

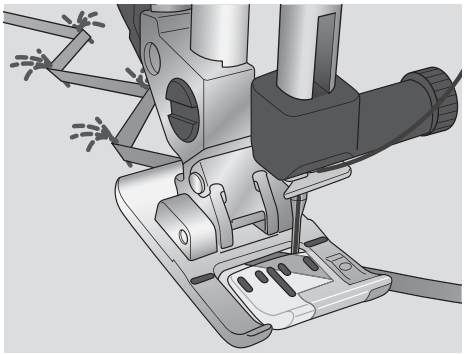

www.sewshop.eu

Double ribbon stitches (720)

Add dimensional elements to your decorative stitching with the beautiful double ribbon stitches. Narrow ribbons are woven into these special stitches as you sew. 2-5mm (approx. ⅛"-¼") ribbons are recommended for this technique. For best results, use stabilizer, appropriate for your fabric type and weight, under your fabric to support your stitching.

1. Choose a double ribbon stitch in category 8.1. Activate needle down. Use the start/stop button to begin sewing. The machine will complete the first part of the stitch and stop automatically with the needle down. See illustration 1.
2. Position the first ribbon under the foot in front of and touching the needle, at the same angle as the stitching. Continue sewing until the machine stops again. See illustration 2.
3. Add a second ribbon, placing it in front of the needle, crossing the first and at the same angle as the travel stitches. Continue sewing until the machine stops. See illustration 3.
4. Fold the second ribbon over itself and position in front of the needle as before; continue stitching until the machine stops. Both ribbons are now on the same side. See illustration 4.
5. Now fold the first ribbon and pull it in front of the needle, crossing the second ribbon; sew until the machine stops. See illustration 5.
6. Fold the first ribbon again and position in front of the needle. Continue sewing. When the machine stops both ribbons will be on the same side again. See illustration 6. Continue using the ribbon to the left that is positioned further back and fold over to the right side in front of the needle. Sew until the machine stops. Fold the same ribbon back to the left side and continue to sew. Repeat the same moment until the desired length is achieved.

Tip: You should never have both ribbons on the right. The ribbon on the right should be folded back over to the left before bringing the second ribbon to the right.

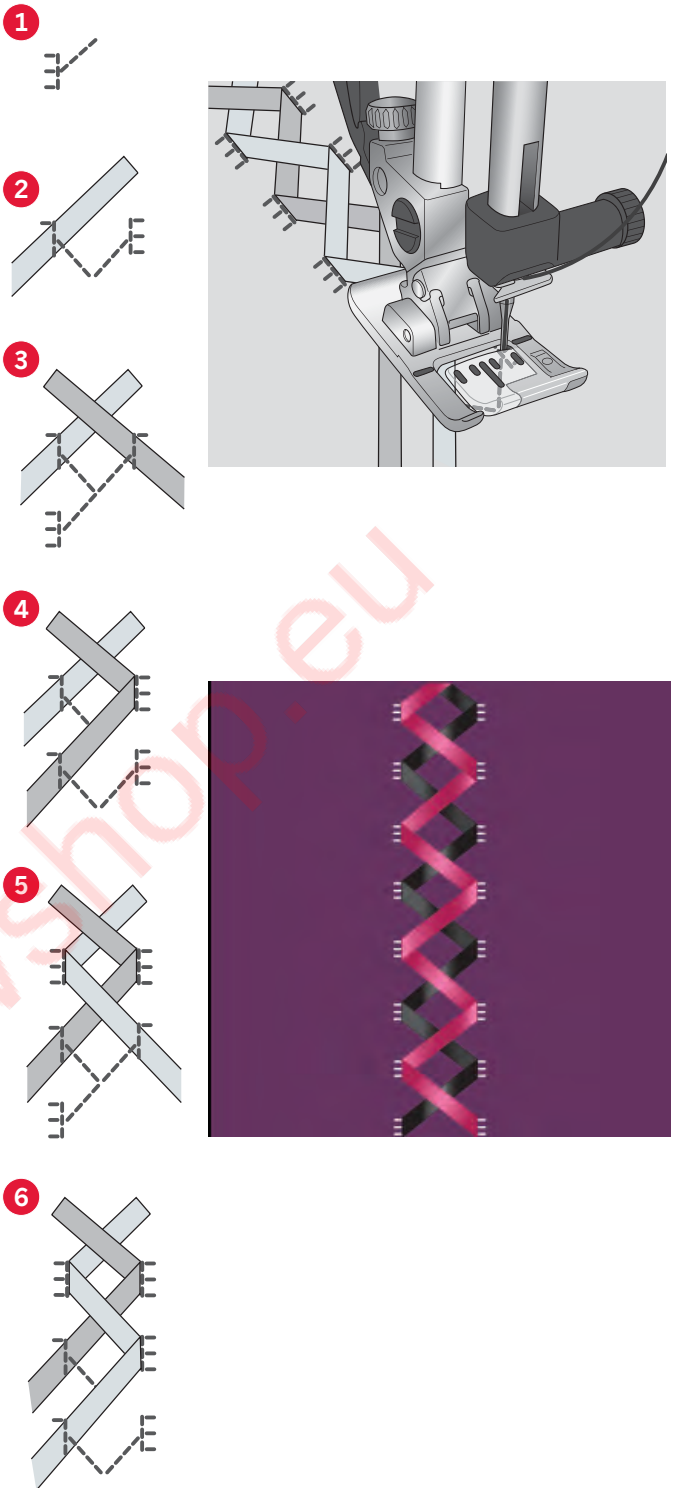

www.sewshop.eu

Triple ribbon stitches (720)

Add dimensional elements to your decorative stitching with the beautiful triple ribbon stitches. Narrow ribbons are woven into these special stitches as you sew. 2–10 mm (approx. ⅛-⅜") ribbons are recommended for this technique. For best results, use stabilizer, appropriate for your fabric type and weight, under your fabric to support your stitching.

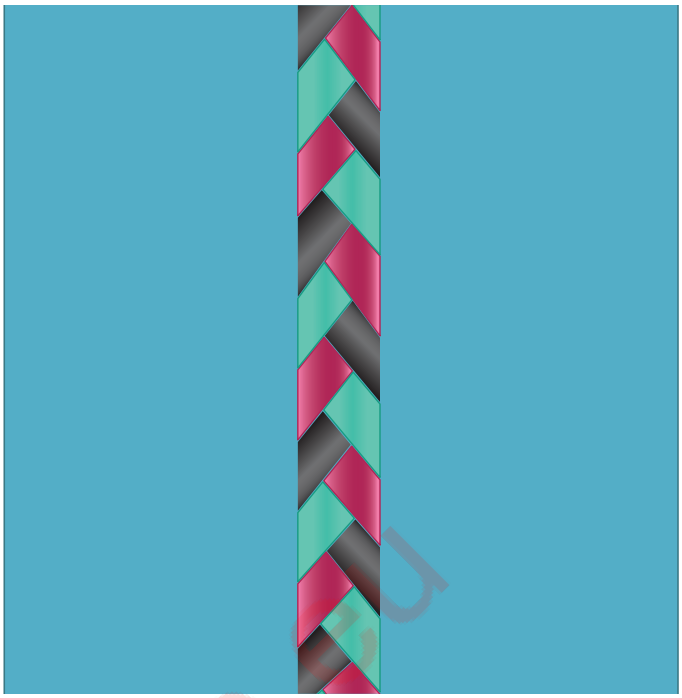

Floating Stitches (720)

Floating stitches create a special effect where the connecting stitches are invisible. There are two different ways to use this technique; the first technique is to sew with the Bi-Level Guide Foot, a piece of stabilizer and one piece of folded fabric. The second technique is to sew two pieces of fabric together.

Sewn with the Bi-Level Guide Foot:

1. Fold the fabric, right sides together, and place the stabilizer underneath, making sure it extends outside the folded edge.
2. Attach the Bi-Level Guide Foot and engage the IDT™. Let the folded edge follow the guide of the foot, making sure the guide is running on the stabilizer.
3. Once finished, pull the fabric over.

Sewn with 1A foot:

1. Place two pieces of fabric, right sides together, and place a stabilizer underneath.
2. Attach the 1A foot and engage the IDT™. Start to sew using the desired seam allowance.
3. Once finished open the fabric, giving it a gentle tug to expose the Floating Stitches.

Sewn with 1A foot step 3 same as above.

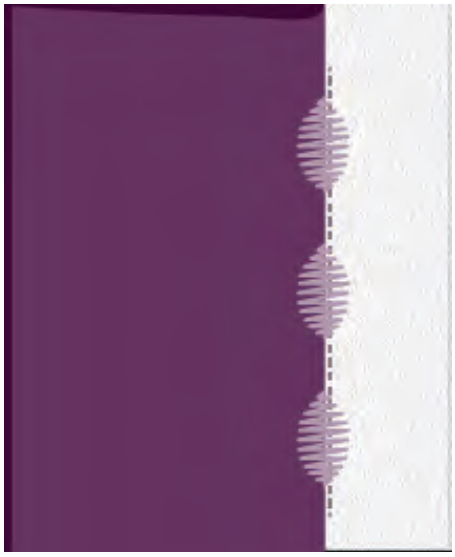

www.sewshop.eu

Common sewing pop-ups

Bobbin thread low

When the bobbin thread is running low, a pop-up message appears giving you an indication that the bobbin needs to be changed soon. This gives you an opportunity to plan where to stop sewing and change the bobbin. If you want to continue sewing, touch the foot control without closing the pop-up. When the bobbin is replaced with a full one, touch OK in the pop-up.

Remove Sensormatic buttonhole foot

The Sensormatic buttonhole foot needs to be removed before doing any of the following:

- Sewing a stitch that is not a buttonhole.
- Sewing a buttonhole that can not be sewn with the Sensormatic buttonhole foot.
- Sewing an adjusted buttonhole saved without the Sensormatic buttonhole foot in your Personal menu.

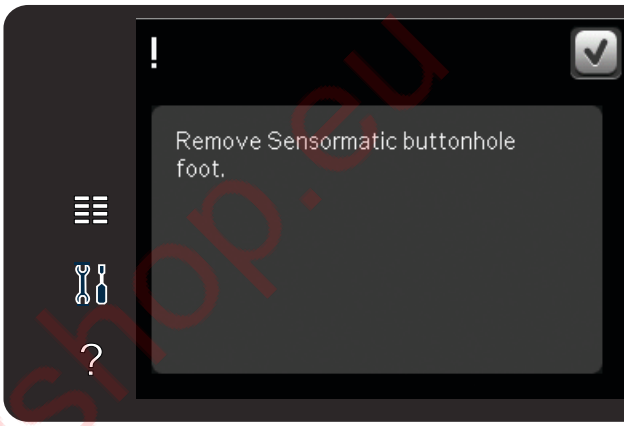

Machine needs to rest

If the machine stops and this pop-up appears on the screen, the machine needs to rest. When the OK icon is enabled you can resume sewing. The sewing results will not be affected.

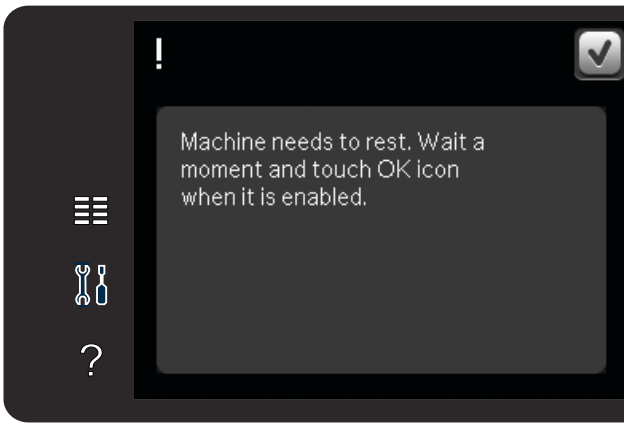

www.sewshop.eu

Sequencing 5

www.sewshop.eu

Sequencing

You can combine stitches and/or letters and numbers to create sequences. Combine various decorative stitches and stitch fonts from the machine or from an external device. Stitches made in Stitch Creator™ can also be inserted in a sequence.

Note: If you mix tapering stitches with other stitches in Sequencing, the sequenced stitch can not be tapered. However, if you only program tapering stitches, the entire sequenced stitch can be tapered.

Sequencing - overview

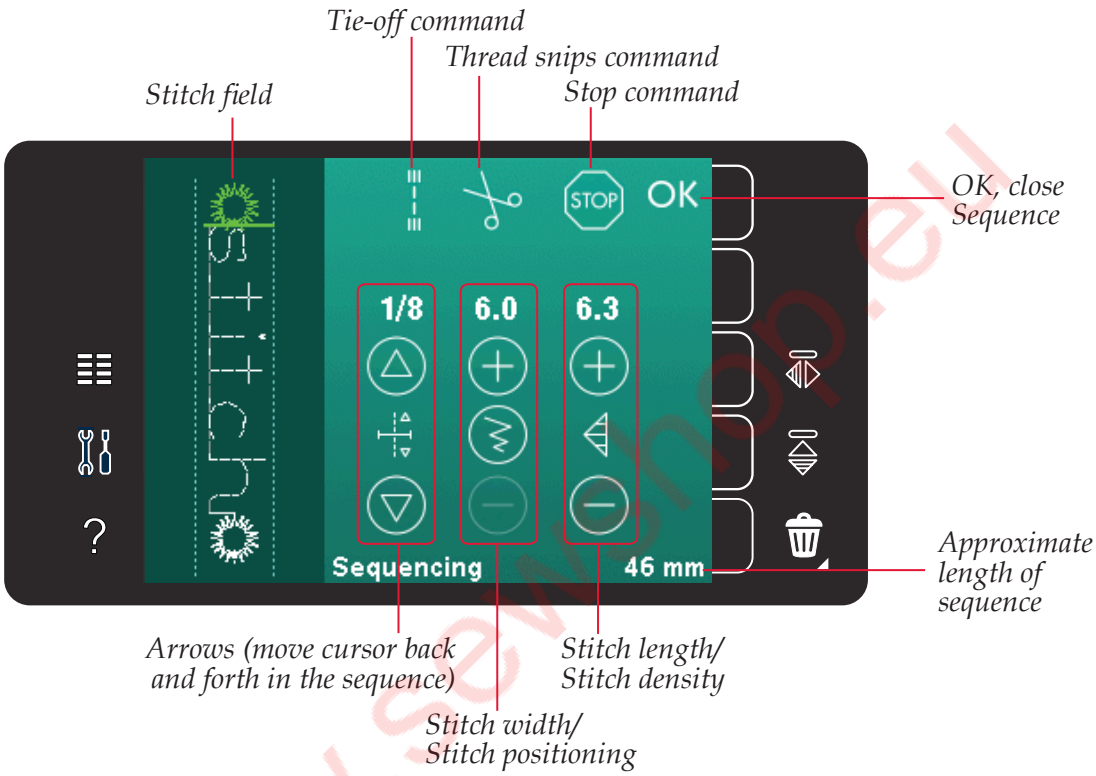

Note: All symbols and options will not be shown at the same time.

www.sewshop.eu

Open and exit sequencing

To open, touch the sequencing icon on the option bar. To close sequencing and sew your created sequence, touch OK in the top right corner in sequenceing window.

Note: You can also close sequencing by pressing the foot control or by pressing the start/stop button.

Not all stitches are available to use in a sequence. If you try to select an unavailable stitch, a pop-up will notify you.

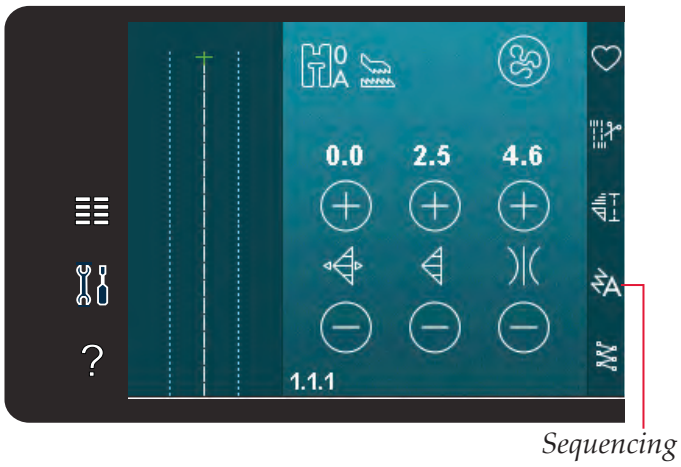

Create a sequence

To start creating a sequence, find the desired stitch and/or font by opening the selection menu.

Create sequence from stitches

Open selection menu. Use the scroll arrows to scroll through the list of stitches. Touch a stitch in the selection area to add it to the sequence. To get an overview of all stitch categories, touch the stitch category icon.

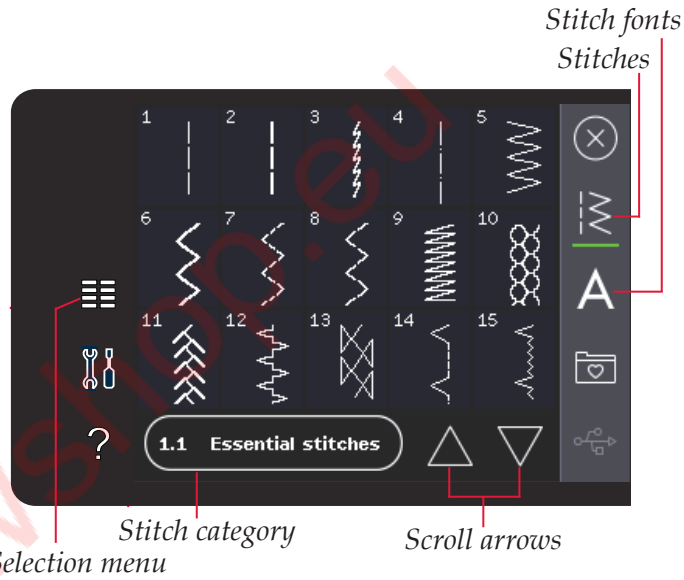

Create sequence from letters

Open the selection menu. Touch stitch fonts to open a window with available stitch fonts. Touch to load the desired stitch font into sequecing.

Touch font style icon to toggle between upper or lower case letters, numbers or special symbols. Move the cursor through the sequence using the forward/backward arrows. To delete a letter or stitch, touch delete. Long touch to delete the whole sequence.

The active position is marked by a cursor and the selected stitch or letter will be marked in green. Inserted stitches will be placed at the cursor position. Only the selected stitch can be adjusted.

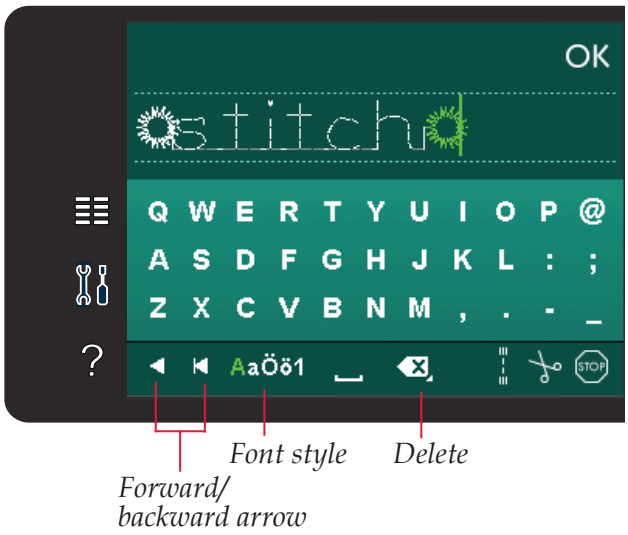

www.sewshop.eu

Insert a stitch or letter

Move the cursor where you want to add a stitch or letter. Select the desired stitch you want to insert. It will be placed at the cursor position.

Adjust text and stitches

You can mirror, adjust length and width or change the density or position of the selected stitch. For some stitches the adjustment icons toggle between two stitch setting options (width/positioning) and/or (length/density). This will be indicated by a button symbol in the middle of the stitch control. Toggle between the different stitch settings by touching the button symbol in the middle of the control. The adjustments work just like in sewing mode.

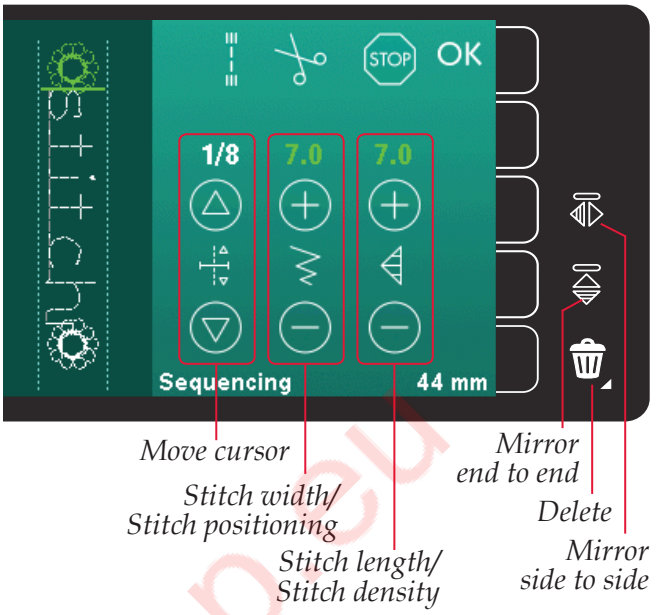

Delete a stitch or letter

If you want to delete a stitch, move the cursor to the stitch you want to delete and touch the delete icon. Use the long touch function to delete the whole sequence.

Replace a stitch or letter

To replace a stitch, simply select it and then touch delete and insert the new stitch. It will be placed at the cursor position.

Sequence commands

You can insert tie-off, stop and thread snip commands into the sequence. These commands will be included in the sequence and will always be performed when sewing it.

Move the cursor to the position where you want to add a command. Select it and an icon will be added into the sequence. This confirms that the command is inserted and it also shows where the command will be performed in the sequence.

Use the tie-off command if you want a secure tie-off. You can insert the tie-off commands anywhere in the sequence.

Insert the thread snip command if you want the machine to tie-off and cut the threads and raise the presser foot.

Insert a stop command if you want the machine to stop. This is useful for example at the end of the sequence if you want to sew it only once or to create a sequence in several rows.

www.sewshop.eu

Loading and sewing a sequence

To load the sequence touch OK in the top right corner of the secuencing window. The sequence will be loaded to sewing mode.

Note: You can also close sequencing by pressing the foot control or by pressing the start/stop button.

In sewing mode it is possible to start sewing anywhere in the sequence. Use the arrows to step through the sequence.

If selecting another stitch in sewing mode and then re-opening sequencing, your sequence will remain unchanged. Every time sequencing is closed, the sequence will be loaded to sewing mode.

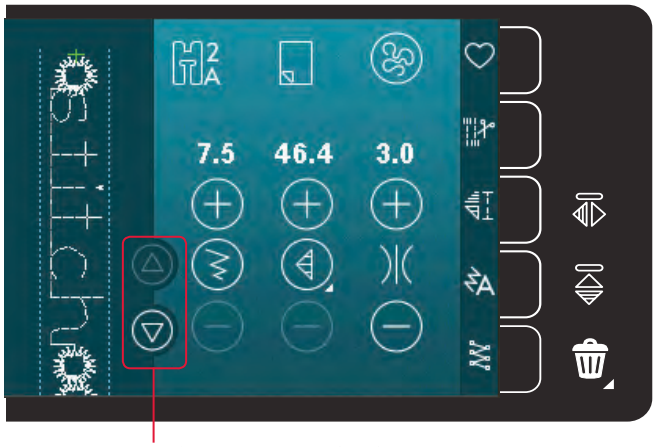

Arrows (move cursor back and forth in the sequence)

Adjust the entire sequence

Adjustments made in sewing mode will affect the whole sequence. However, these changes will not be saved if you return to sequencing. To adjust individual stitches in the sequence, return to sequencing.

Saving a sequence

Saving a sequence with your personal sequence adjustments is made in sewing mode. Close sequencing by touching OK in the top right corner of the sequencing window.

Save the sequence by touching the save to personal menu icon. You can scroll through the personal menus to find a free position, using the scroll arrows. Any box without a stitch is a free position and can be used to save your new stitch. Simply touch the position and your stitch is saved.

Any box with a stitch is an occupied position. You can overwrite a previously stored stitch. Simply touch the stitch to overwrite. A pop-up will ask you to confirm that you want to overwrite the previously stored stitch. Cancel the saving process by touching the cancel icon.

Save to personal menu

Cancel

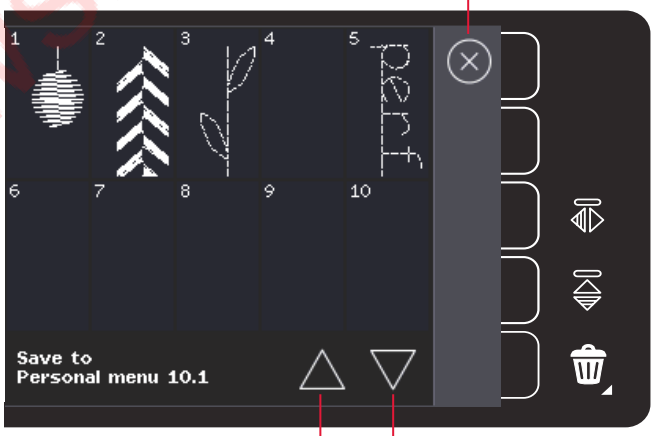

Scroll arrows

Delete a sequence

If you want to delete one stitch, first touch delete (A). A highlighted green delete symbol (B) will appear at the lower right to indicate that delete is active. Then touch the stitch you want to delete. The positon will be emptied. To abort the deletion before selecting a stitch, touch the delete icon again.

A long touch of the delete icon will empty the whole subcategory selected.

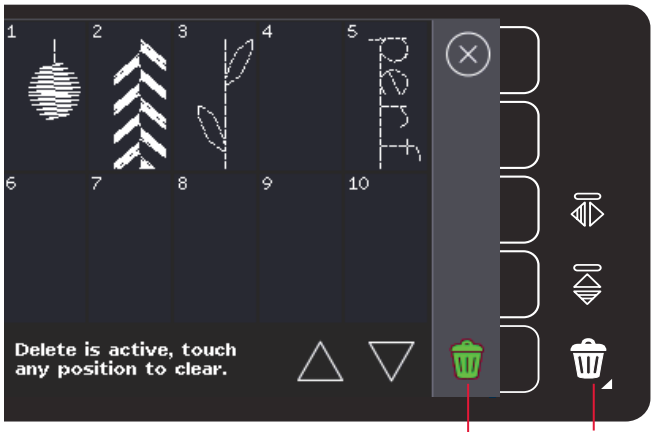

Delete (A)

Delete symbol (B)

www.sewshop.eu

Important sequencing information

Sequence adjustments

Adjustments made in sewing mode will affect the whole sequence. However, these changes will not be saved if you return to sequencing. To adjust individual stitches in the sequence, return to sequencing.

Sequences in Stitch Creator™ feature (720)

A sequence can be opened in Stitch Creator™ feature and modified. Note that when doing this, your sequence will become one stitch. When re-opening sequencing, it will not be possible to adjust any part of the former stitches in the sequence any more. The entire sequence will be handled as one stitch.

Common sequencing pop-ups

Not an editable stitch

Some stitches are not possible to insert into a sequence, for example buttonholes.

Sequence out of range

The stitch you are trying to add will make the sequence too long.

Your programmed stitch can be up to approximately 500mm (20”) long and contain up to 99 stitches. If the sequence exceeds the maximum length or number of stitches this pop-up will let you know.

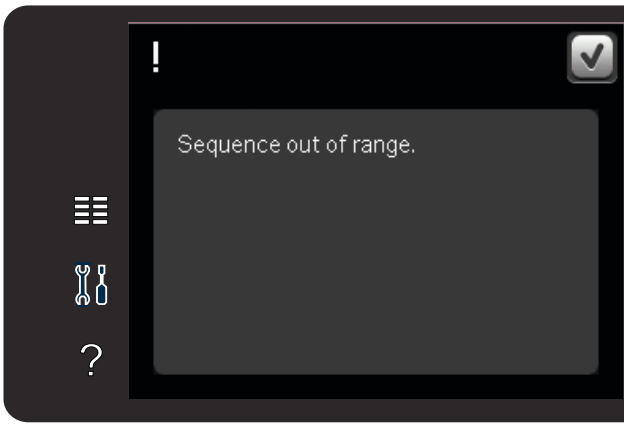

www.sewshop.eu

Stitch Creator™ Feature 6

only quilt expression™ 720

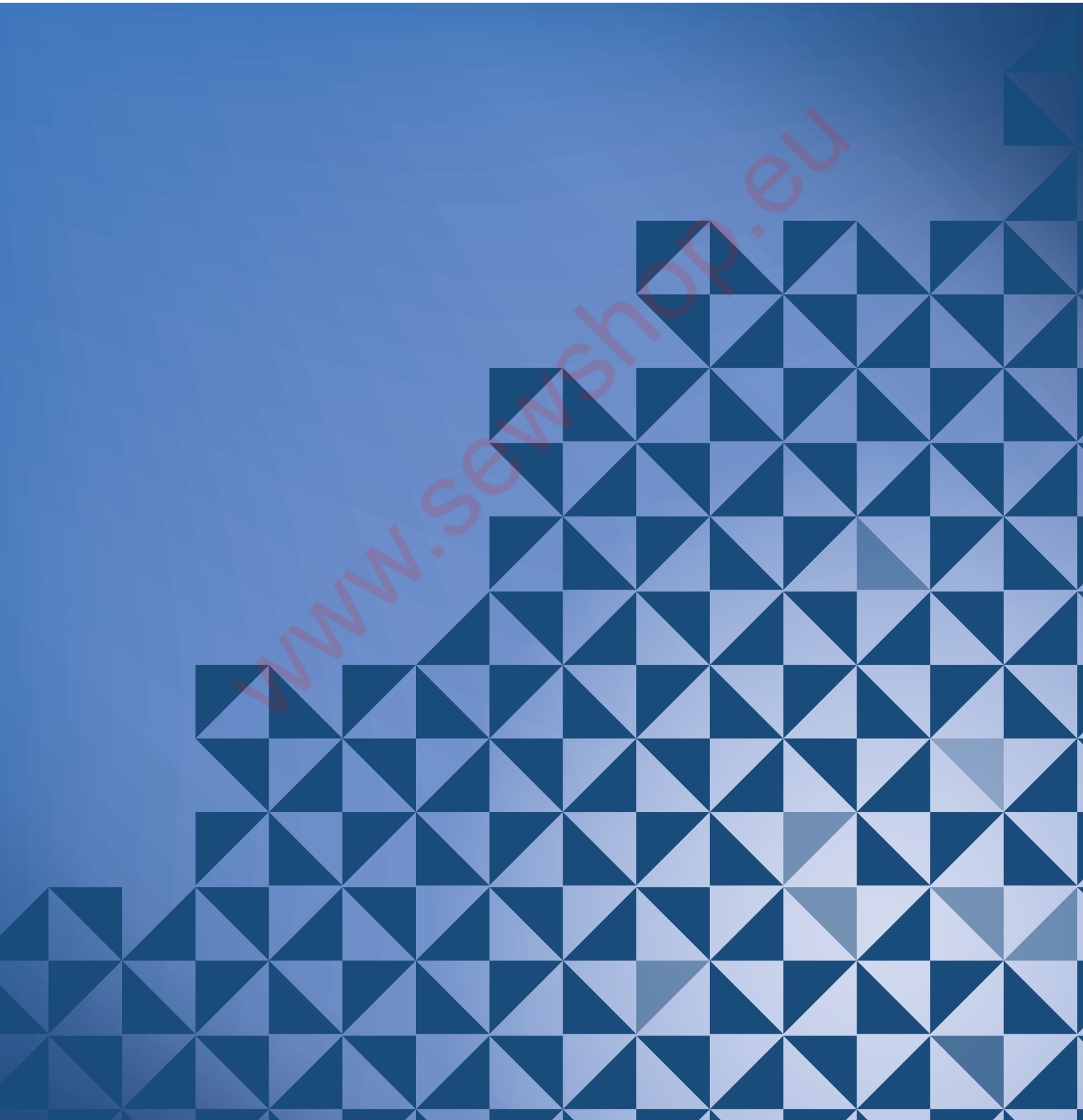

www.sewshop.eu

Stitch Creator™ feature

In Stitch Creator™ feature, you can create completely new stitches and adjust every single stitch point. Customize and create your own stitches. Add, erase, move and combine stitches directly on screen. You can also insert a built-in stitch, and then edit to create your own version of that stitch.

The width of the stitch field is 9mm and maximum stitch length is 6mm. The grid and the vertical center line will help you to create your stitch. Your stitch can be up to approximately 500mm (20") long and can be stored in your personal menu.

Stitch Creator™ feature - overview

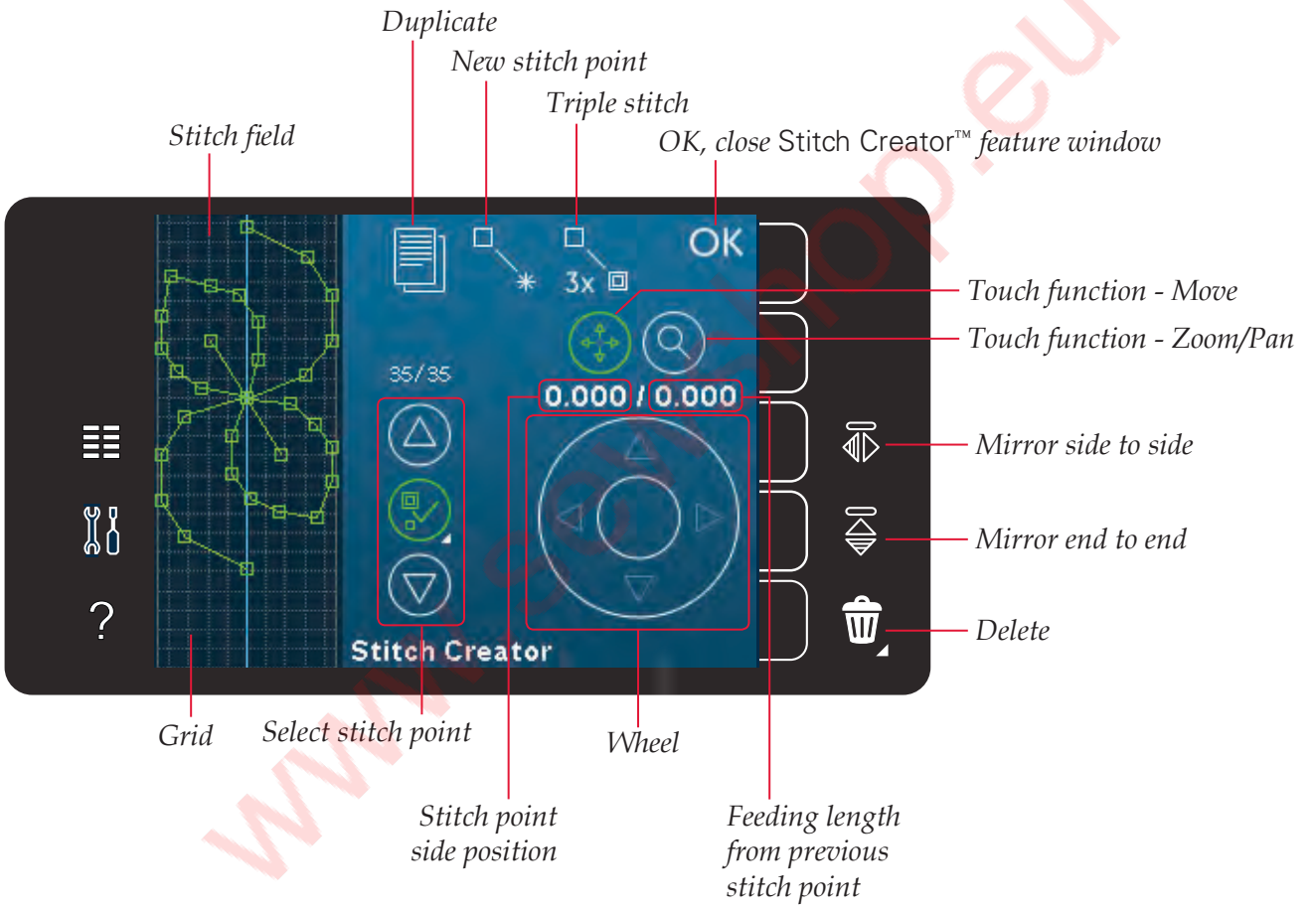

www.sewshop.eu

Open and exit Stitch Creator™ feature

To open, just touch the Stitch Creator™ feature icon on the option bar. To close Stitch Creator™ feature and sew your created stitch or combination, touch OK in the top right corner of the screen.

Note: If your programmed stitch is ready to be sewn, you can also close the active function by pressing the foot control, or by pressing the start/stop button.

Some stitches cannot be used with Stitch Creator™ feature. If you try to select one of these stitches, a pop-up will notify you.

Stitch Creator™ *feature*

Definition of a stitch point

A stitch point is the point where the needle goes through the fabric. Stitch points are connected by stitches.

Each stitch point is indicated by a green dot. A selected stitch point is indicated by an outlined square. A marked stitch point is indicated by a filled square.

New stitch point

OK, close Stitch Creator™ *feature*

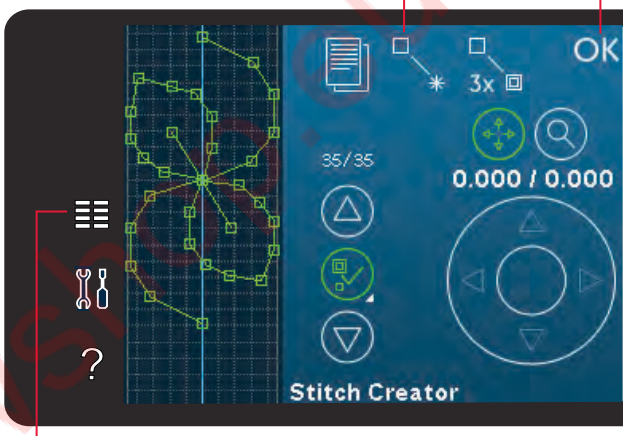

Selection menu

Start creating - add a stitch or stitch point

To add a new stitch point touch the new stitch point icon. You can also add a built-in stitch from the selection menu.

Select stitch points

To select a stitch point, just touch it on screen with your stylus or use the arrows in the select stitch point control. If selecting more than one stitch point with the stylus, the stitches between the two stitch points will automatically be selected as well, marked with green color (A and B in picture).

You can also select stitch points by activating select stitch point control. First, touch the button symbol in the middle of the control. The button symbol will be surrounded by a green circle to indicate that it is active. Use the up arrow to select stitch points before the marked stitch point and the down arrow to select the stitch points after the marked stitch point.

Note: If selecting stitch points using the up arrow, you can deselect them by touching the down arrow.

The first number above the select stitch point control is the marked stitch point. The second number is the total number of stitch points.

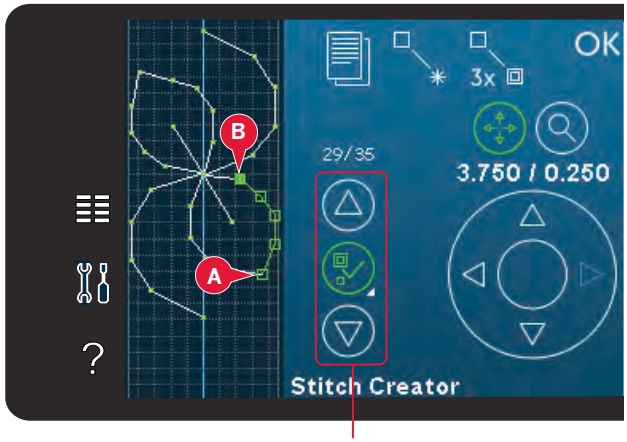

Select stitch point

www.sewshop.eu

Duplicate selected stitch point

If you want to duplicate a stitch point(s), select the stitch point(s) and use the duplicate icon to create a copy.

If several stitch points are selected, all stitch points will be duplicated and inserted after the marked stitch point.

Insert a new stitch point

Touch this icon to insert one single stitch point. The two stitch points will create a new stitch.

Triple stitch

Touch the triple stitch icon and the selected stitch(es) will be tripled.

Note: Only enabled if more than one stitch point is selected.

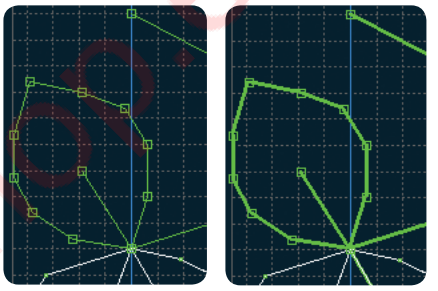

Triple stitch

Mirroring side to side

The selected stitch point(s) will be mirrored horizontally.

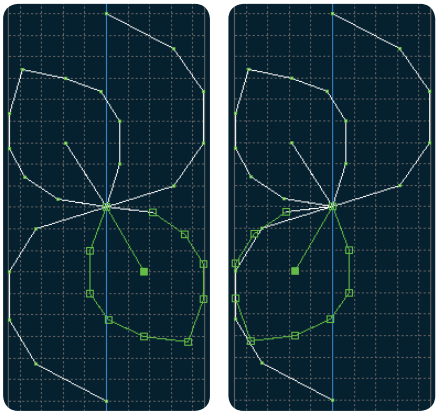

Mirroring side to side

Mirroring end to end

The selected stitch points will be mirrored vertically.

Note: Only enabled if more than one stitch point is selected.

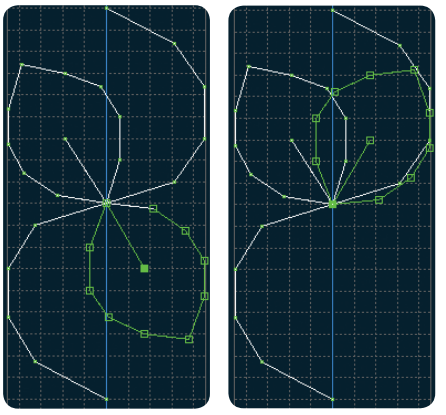

Mirroring end to end

Delete selected stitch point

If you want to delete a single stitch point, select the stitch point and touch the delete icon. If more than one stitch point is selected, they will all be deleted when touching the delete icon.

Use the long touch function to delete all stitch points in the stitch field.

www.sewshop.eu

Touch functions

Use your stylus to make changes directly on screen by touching and dragging in the stitch field. You can pan and move depending on which touch function is activated. You can also use the arrows in the wheel to make precise adjustments.

Move

You can move the selected stitch or stitch points using your stylus on the screen or touch the arrows in the wheel .

Zoom/Pan

When using the zoom/pan icon, the focus will be on the marked stitch point. Pan will be active. Use the stylus to pan on the screen.

Note: You can not pan outside the sewing area, i.e. when scale is 100% or less, you can not pan sideways.

The distance between the grid lines equals 1mm on the fabric. Use the arrows in the wheel to zoom in or out. If you zoom in on the stitch field, thinner grid lines will appear. The distance between these lines equals 0.5mm. If zooming out, only the edge lines of the stitch field will be visible.

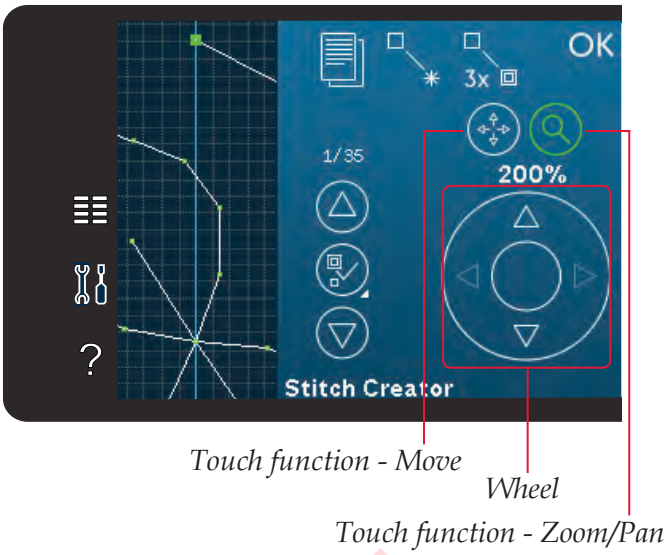

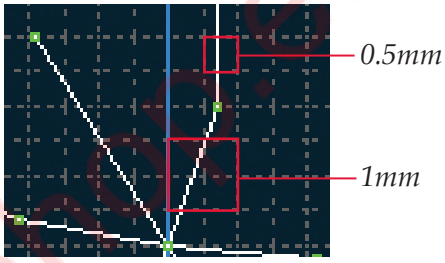

Position of the marked stitch point

The number to the left above the wheel shows the actual needle position from the center line for the marked stitch point (A).

The number to the right above the wheel shows the actual feeding length from the previous stitch point (B).

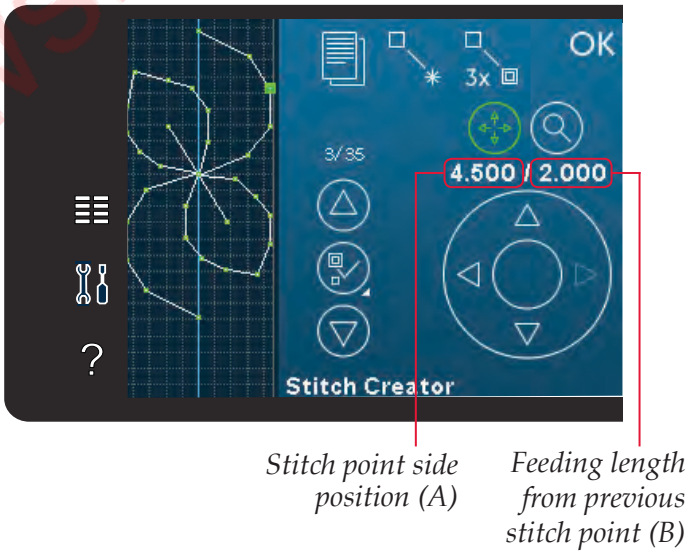

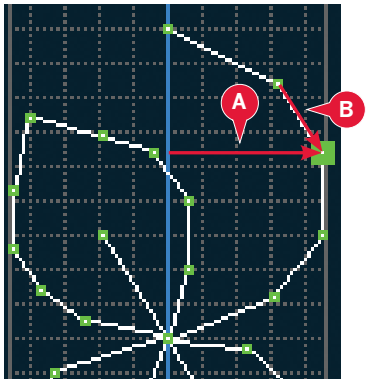

www.sewshop.eu

Loading and sewing a stitch

To sew the created stitch touch OK in the top right corner in the Stitch Creator™ feature window. The stitch will be loaded to Sewing mode and is ready to be sewn.

If selecting another stitch in sewing mode and then re-opening Stitch Creator™ feature, your created stitch will remain unchanged. Every time Stitch Creator™ feature is closed, the stitch will be loaded to sewing mode.

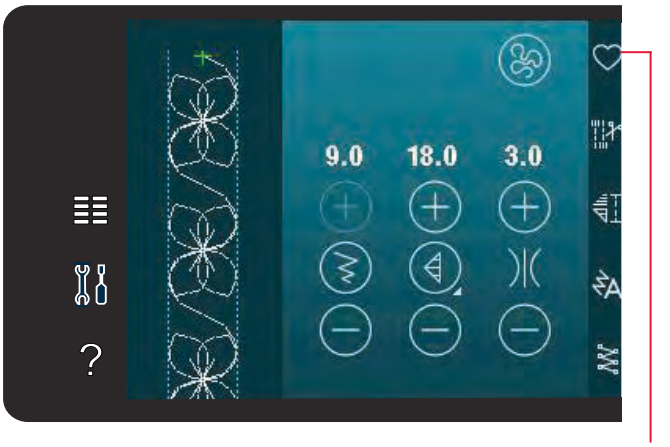

Save to personal menu

Saving a stitch

Saving a stitch is done in sewing mode. Close Stitch Creator™ feature by touching OK in the top right corner of the screen. Save the stitch by touching the save to personal menu icon.

You will find saved stitches in category 10, personal menu. Each subcategory in the personal menu has 10 positions to save your own stitches or sequences. Choose the subcategory you want to save your stitch in. All your previously saved stitches will be shown in the personal menu.

Common Stitch Creator™ feature pop-ups

Not an editable stitch

Some stitches are not available to edit in Stitch Creator™ feature. Buttonholes and Maxi stitches cannot be opened in Stitch Creator™ feature.

Sequence out of range

Your programmed stitch can be up to approximately 500mm (20") long. If the stitch/sequence exceeds the maximum length this pop-up will let you know.

The stitch or stitch point you are trying to add will make the stitch too long.

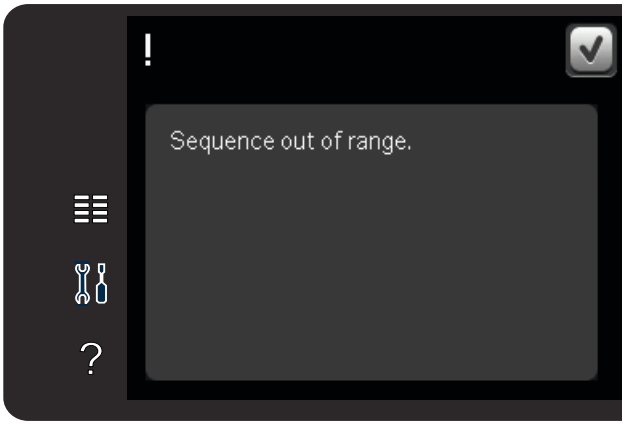

www.sewshop.eu

Personal files 7

www.sewshop.eu

Personal files

Use personal files to organize, add, move, remove and copy your files. Use either built-in memory or an external device connected to your machine for storing.

Personal files - overview

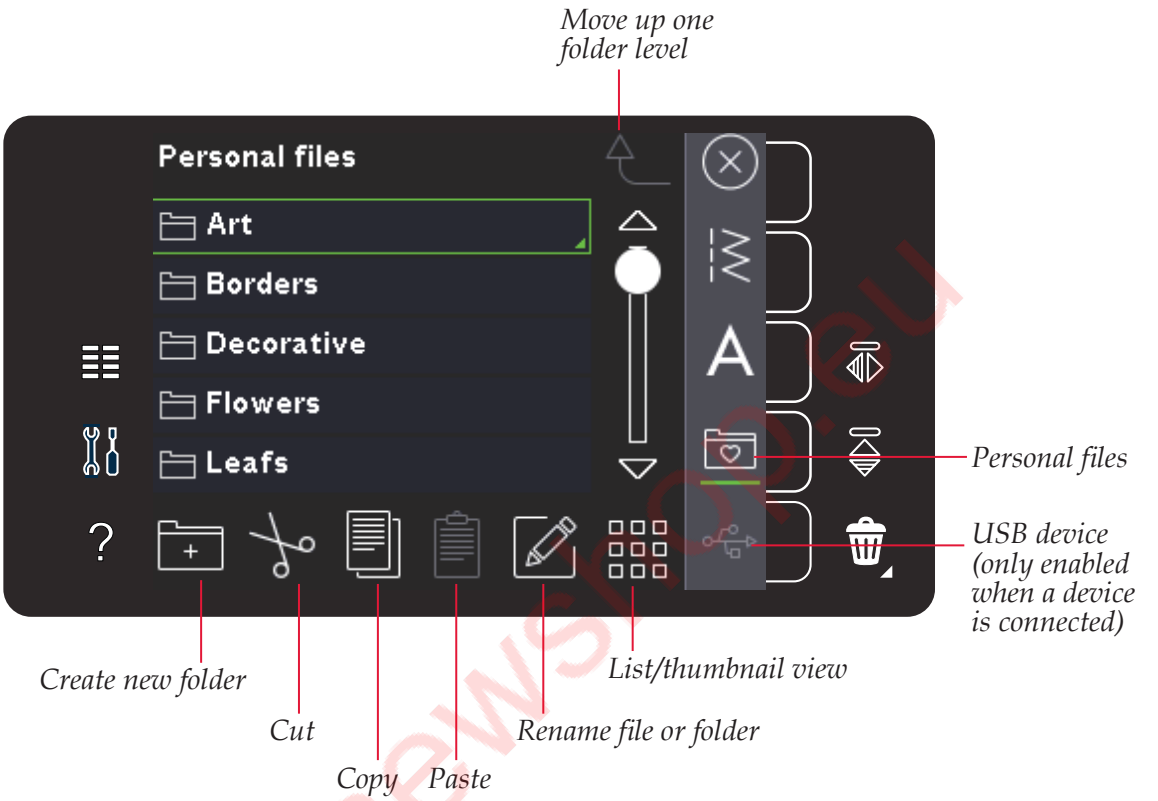

Available memory

In the built-in memory you can store your files. To check how much memory is left in the built-in memory, open the setting menu. Touch machine information in the selection bar to the right.

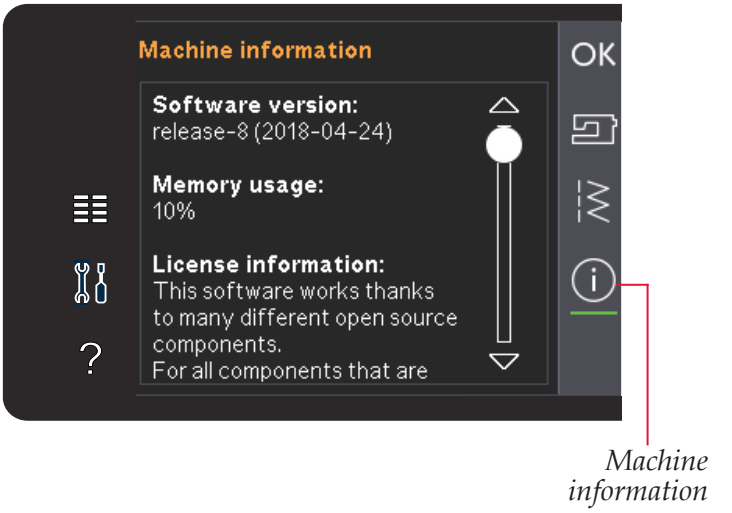

www.sewshop.eu

Browse personal files

To open personal files, first open selection menu. Select personal files in the selection bar at the right of the screen.

Create folders and arrange your personal files so that you can find your favorites easily.

USB device

You can explore an USB device connected to the USB-port. The USB device icon is only enabled when a device is connected.

Touch the USB device to display the content in the selection area. Files are displayed as thumbnail images or with an icon.

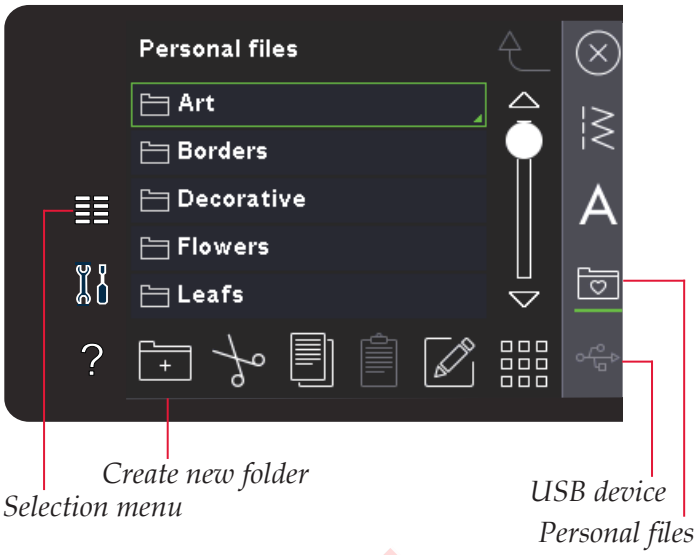

List/thumbnail view

Touch the list/thumbnail view icon to show the files in a list with more space for the file name characters. For each file, file name and type will be displayed. Touch the list/thumbnail view icon again to toggle to thumbnail view.

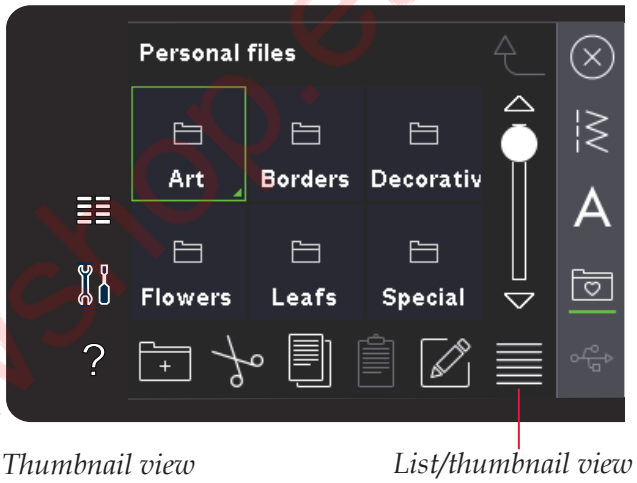

Open a folder

To open a folder in personal files, long touch the folder. The contents of the folder will be displayed on the screen.

Move up one folder level

Use the move up one folder level icon to step up through the levels of folders. You can step up all the way to the root level. On the screen you will see files and folders included in each level as you step.

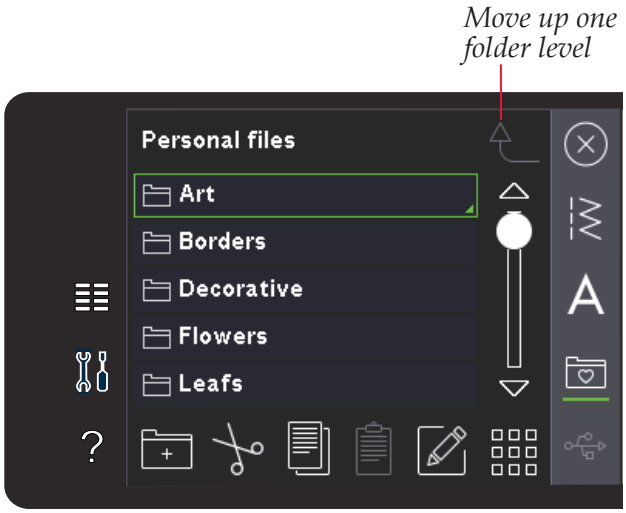

www.sewshop.eu

Organize

Create a new folder

Touch the create new folder icon to create a new folder. A pop-up opens to enter a name for your folder.

Move a file or folder

Use cut and paste to move a file or folder to another storage space. Select the file or folder, then touch cut. Open the folder where you want to place the file or folder. Touch paste.

Copy a file or folder

Use copy and paste to copy a file or folder to another storage space. Select the file or folder, then touch copy. Open the folder where you want to place the file or folder. Touch paste.

Delete a file or folder

To delete a file or folder, mark it and touch delete. A pop-up asks you to confirm the deletion. If a folder is deleted, all files within the folder are deleted as well.

To delete all files and folders in the current folder, long touch the delete icon.

Rename a file or folder

Select the folder or file you want to rename, then touch the rename icon to open a pop-up where you can change the name.

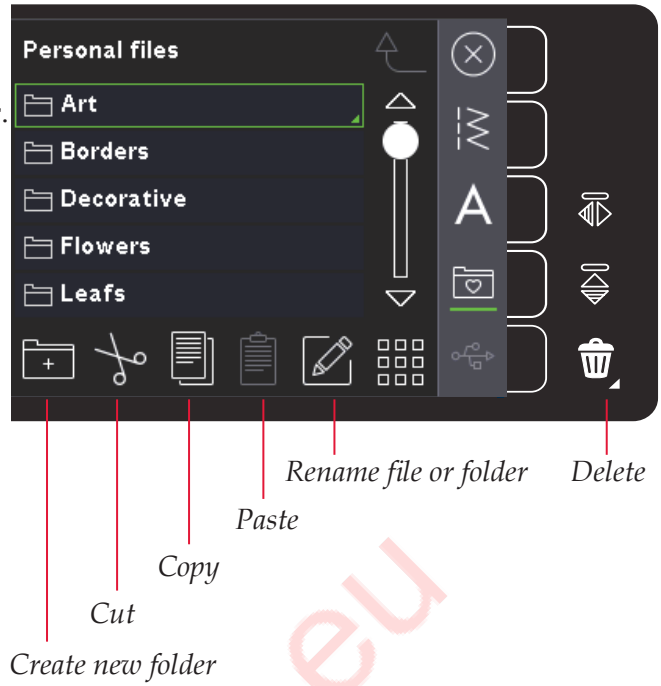

Common personal files pop-ups

Available memory is low

Your machine can store files in the built-in memory. When the memory is full, you can move them to an external device by using the cut and paste functions.

When there is only a small amount of memory left, your machine will alert you once. If you continue to fill the memory, it will not remind you again, until the memory is completely full.

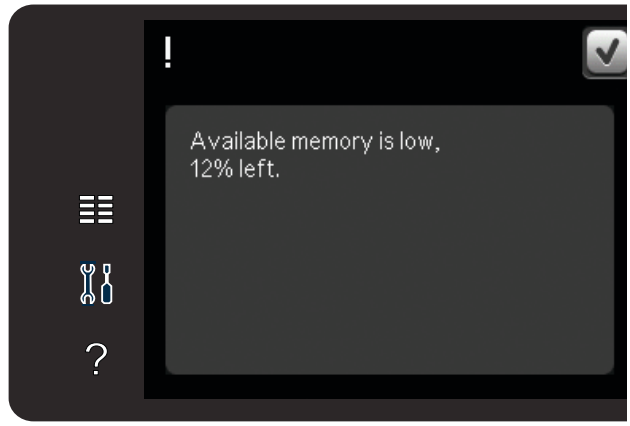

System busy

When the machine is loading, saving, moving files or anything that takes time, the system busy pop-up is shown.

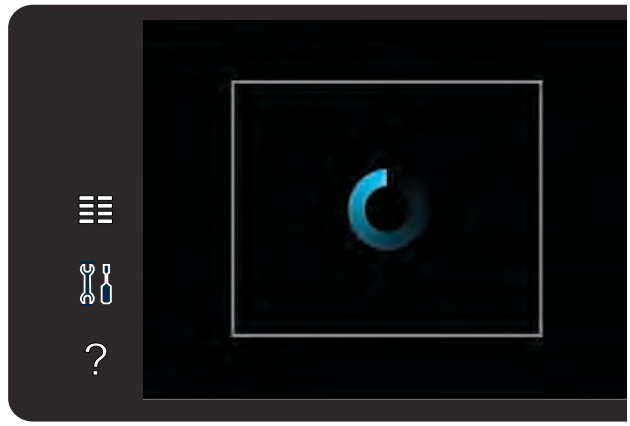

www.sewshop.eu

Maintenance 8

www.sewshop.eu

Cleaning the machine

To keep your sewing machine operating well, clean it often. No lubrication (oiling) is needed.

Wipe the exterior surface of your machine with a soft cloth to remove any dust or lint built up.

Note: Use of cleaners or solvents on the machine can cause damage to the plexifront.

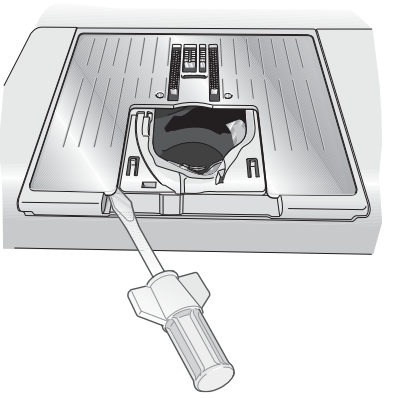

Cleaning the bobbin area

Note: Lower the feed dogs by pressing foot up and extra lift. Turn off the machine.

Remove the presser foot and slide off the bobbin cover. Place the screwdriver under the needle plate as shown in the picture and gently turn the screwdriver to pop off the needle plate. Clean the feed dogs with the brush found with the accessories.

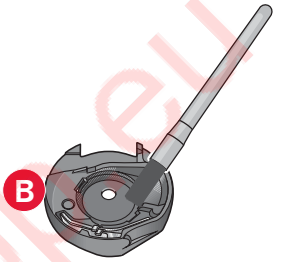

Cleaning under the bobbin area

Clean the area under the bobbin case after sewing several projects or any time you notice an accumulation of lint in the bobbin case area.

Remove the bobbin case holder (A) covering the front part of the bobbin case by lifting it up. Remove the bobbin case (B) by lifting it up. Clean with the brush.

Note: Use caution when cleaning around the thread snips knife (C).

Put the bobbin case and the bobbin case holder back in place.

Note: Do not blow air into the bobbin case area. The dust and lint will be blown into your machine.

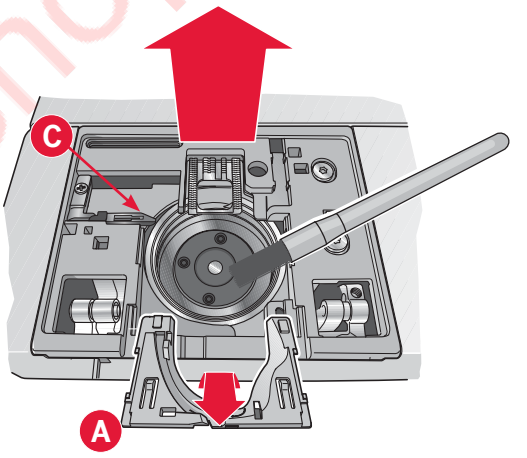

www.sewshop.eu

Replacing the needle plate

With feed dogs lowered, place the needle plate with the knob fitting into the notch at the back (D). Press the needle plate down until it clicks into place. Slide on bobbin cover.

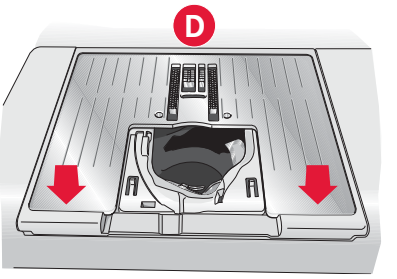

Non-original parts and accessories

The warranty does not cover any defect or damage caused by use of non-original accessories or parts.

Troubleshooting

In this troubleshooting guide you will find solutions to the problems you may have with your machine. For further information please contact your local authorized PFAFF® dealer who will be happy to help you.

Problem/cause	Remedy
General problems	
Bobbin alarm does not work?	Clean lint from bobbin area and use only the original PFAFF® bobbins approved for this model.
Thread snips do not cut the thread?	Remove needle plate and clean lint from bobbin area. Enable automatic thread snip in the settings menu.
Fabric does not move?	Make sure that machine is not set in free-motion mode. See chapter 4.
Wrong stitch, irregular or narrow stitch?	Deactivate twin needle or stitch width safety in the settings menu.
The needle breaks?	Insert needle correctly as described in chapter 2. Attach correct needle for the fabric.
The machine will not sew?	Check that all plugs are securely plugged into the machine and into the wall socket. Check that the foot control cord is securely plugged into the foot control. Push bobbin winder lever to sewing position.
The PFAFF® Color Touch Screen displays the startup screen?	Touch the touch screen to activate. Turn off screen saver in the settings menu.
Icons on the touch screen are not activated when touched?	Close any pop-ups that may be blocking the screen. Calibrate the touch screen. Calibrate touch screen is found in the settings menu.
The sewing machine screen and/or Function Buttons do not respond to touch?	The sockets and function buttons on the machine can be sensitive to static electricity. If the screen does not respond to touch, turn the machine OFF and then ON again. If the problem persists, contact your authorized PFAFF® dealer.

The machine skips stitches	
Did you insert the needle properly?	Change needle and insert correctly as described in chapter 2.
Did you insert a wrong needle?	Use needle system 130/705 H.
Is the needle bent or blunt?	Insert a new needle.
Did you thread the machine properly?	Check how the machine is threaded.
Is the correct presser foot used?	Attach correct presser foot.
Is the needle too small for the thread?	Change the needle.
Is the fabric moving up and down with the needle when free-motion sewing?	Attach Dynamic spring foot 6D (optional accessory, part number 820991-096). If using foot 6A, reduce the presser foot height in free-motion options.

Needle thread breaks	
Did you insert the needle properly?	Change needle and insert correctly as described in chapter 2.
Did you insert a wrong needle?	Use needle system 130/705 H.
Is the needle bent or blunt?	Insert a new needle.
Did you thread the machine properly?	Check how the machine is threaded.
Is the needle too small for the thread?	Change the needle to the proper size for the thread.

www.sewshop.eu

Are you using poor thread with slubs or thread which has become dry?	Change to a new higher quality thread purchased from an authorized PFAFF® dealer.
Is a correct spool cap used?	Attach a spool cap of the right size for the actual thread spool as described in chapter 2.
Is the best spool pin position used?	Try a different spool pin position (vertical or horizontal).
Is the needle plate hole damaged?	Change the needle plate.

Bobbin thread breaks	
Did you insert the bobbin properly?	Check the bobbin thread.
Is the needle plate hole damaged?	Change the needle plate.
Is the bobbin area full of lint?	Clean lint from bobbin area and use only the original PFAFF® bobbins approved for this model.
Is the bobbin wound correctly?	Wind a new bobbin as described in chapter 2.

The seam has uneven stitches	
Is the thread tension correct?	Check needle thread tension and the threading.
Are you using too thick or slubbed thread?	Change the thread.
Is the bobbin thread evenly wound?	Check bobbin winding. See chapter 2.
Is a correct needle used?	Insert a proper needle correctly as described in chapter 2.

The machine does not feed or feeds irregularly	
Did you thread the machine properly?	Check how the machine is threaded.
Has sewing lint collected between the feed dogs?	Remove the needle plate and clean the feed dogs with a brush.

System report	
Is your machine displaying the system report pop-up?	When the system report pop-up appears, go to personal files/ reports and locate the file (SystemReport01.dmp or higher number). Save the file to a USB stick. Send the file together with a short description of what you were doing before the pop-up appeared to product.improvement@pfaff.com. After sending the file, remove it from your machine.

Have your sewing machine serviced regularly by your local authorized PFAFF® dealer!

If you have followed this troubleshooting information and still have problems, take your sewing machine to your dealer. If there is a specific problem, it is a great help to test sew with your thread on a scrap of your sewing fabric and bring it to your dealer. A sewing sample will often give much better information than words.

www.sewshop.eu

Index

A

Accessories 1:10
Accessory tray 1:9, 2:3
Action indicator 3:7
Add a stitch or stitch point 6:3
Adjust text and stitches 5:4
Adjust the entire sequence 5:5
Alphabets 1:16
Antique hand embroidery stitches 1:15
Antique quilt stitches 1:14
Approximate length of sequence 5:2
Art stitches 1:15
Attaching the Sensormatic buttonhole foot 4:15
Attach presser foot 2:9
Audio repeat 3:3
Automatic presser foot lift 3:4
Available disk space low 7:4
Available memory 7:2

B

Balance 4:5
Blindhem foot with IDT™ system 3 ..... 1:11
Blindhem stitch 4:14
  Elastic blindhem stitch 4:14
Bobbin area, cleaning 8:2
Bobbin cover 1:8
Bobbin, insert 2:8
Bobbins 1:10
Bobbin thread guide 2:5
Bobbin thread low 4:21
Bobbin winding 2:7
  Bobbin winder thread guide 2:7
  Winding from horizontal position 2:7
  Winding while threaded 2:7
Browse personal files 7:3
Brush 1:10
Built-in needle threader 1:8
Built-in USB port 1:8
Buttonhole, corded 4:16
Buttonhole, manual 4:16
Buttonholes 4:15
Button ruler 1:8
Buttons and indicators 3:6
Button sewing 4:17

C

Calibrate touch screen 3:3
Cancel 3:5
Carrying case 2:2
Changing the presser foot 2:9
  Attach presser foot 2:9
  Remove presser foot 2:9
Check needle thread 4:21
Cleaning the machine 8:2
Color Touch Screen 1:8
Common icons 3:5
  Long touch 3:5
  OK and Cancel 3:5
  Scroll bar 3:5
Connecting the foot control cord 2:2
Connect the power cord 2:2
Connect to the power supply 2:2
Copy 7:2, 7:4
Copy a file or folder 7:4
Corded buttonhole 4:16
Cover 2:3
Crazy patch stitches 1:14
Crazy quilt stitching 4:19
Create a new folder 7:4
Create a sequence 5:3
Create new folder 7:2, 7:4
Create sequence from letters 5:3
Create sequence from stitches 5:3
Cross stitches 1:14
Cut 7:2, 7:4
Cut-Away Stabilizer 2:11
Cut jump stitches 3:4

D

Darning 4:17
Decorative stitches (720) 1:14
Decorative stitches (710) 1:17
Definition of a stitch point 6:3
Delete 3:2, 3:5, 4:7, 5:4, 5:5, 6:2, 7:4
Delete a file or folder 7:4
Delete a sequence 5:5
Delete a stitch 4:7
Delete a stitch or letter 5:4
Delete selected stitch point 6:4
Denim needle 2:10
Disengaging the IDT™ system 2:8
Disintegrating Stabilizer 2:11
Double ribbon stitches (720) 4:22
Duplicate 6:2
Duplicate selected stitch point 6:4
Dynamic spring foot 6D free-motion 4:8

www.sewshop.eu

E

Edge guide 1:10
Elastic blindhem stitch 4:14
Embroidery foot 6A 1:11
Embroidery needle 2:10
Embroidery settings 3:5
Embroidery thread 2:11
Engaging the IDT™ system 2:8
Exit sequencing 5:3
Exit Stitch Creator™ feature 6:3

F

Fancy stitch foot 2A 1:11
Fancy stitch foot with IDT™ system 1A 1:11
Feeding length from previous stitch poin 6:5
Feeding length from previous stitch point 6:2, 6:5
Felt pad 1:10, 2:4
Floral and ornamental stitches 1:15
Folder level 7:3
Font, select 4:3
Font style 5:3
Foot control 1:10
Free arm 1:8, 2:3
Free-motion options (720) 4:2
Free-motion options (710) 4:9
Free-motion stippling 4:20
Fun stitches 1:15

H

Handle 1:9
Handlook quilting 4:19
Handlook quilt stitches 1:16
Handlook stitches 1:14
Handwheel 1:8
Hard cover 2:3
Hems in heavy fabric 4:13
Hemstitches 1:15

I

Icons, common 3:5
- OK and Cancel 3:5
- Long touch 3:5
- Scroll bar 3:5

IDT™ system 1:9, 2:8, 4:2, 4:8, 4:13, 4:14, 4:15, 4:19
- Disengaging 2:8
- Engaging 2:8

Immediate tie-off 1:8, 3:6
Included accessories 1:10
Insert a new stitch point 6:4
Insert a stitch or letter 5:4
Inserting the bobbin 2:8
Iron-on Tear-Away 2:11

K

Knee-lift 1:10, 2:3

L

Language 3:3
LED lights 1:8, 2:3
License information 3:5
Lid 1:8
List/thumbnail view 7:2, 7:3
List view 7:3
Load a sequence 5:5
Loading a stitch 6:6
Lock screen 3:3
Long touch 3:5, 4:4

M

Machine information 3:5, 7:2
Machine needs to rest 4:21
Machine overview 1:8
Machine settings 3:3
Machine settings & buttons 3:2-3:8
Main switch 1:8
Manual buttonhole 4:16
Manual buttonhole foot 5M 1:11
Maxi-stitch foot 1:11
Memory available 7:2
Mirror end to end 3:2, 3:5, 4:6, 5:4, 6:2, 6:4
Mirror side to side 3:2, 3:5, 4:6, 5:4, 6:2, 6:4
Move 6:5
Move a file or folder 7:4
Move up one folder level 7:2, 7:3
Multi-purpose tool 1:10, 2:9, 4:17

N

Needle bar 1:8
Needle plate 1:8
Needles 1:10, 2:10
- Denim needle 2:10
- Embroidery needle 2:10
- Stretch needle 2:10
- Universal needle 2:10
- Wing needle 2:10

Needle screw 1:8
Needle threader 1:8, 2:5
Needle thread guide 1:8, 2:5
Needle up/down 1:8, 3:6
New folder 7:4
New stitch point 6:2, 6:3
Non-original parts and accessories 8:2
Not an editable stitch 5:6, 6:6

www.sewshop.eu

O

OK and Cancel 3:5
Open a folder 7:3
Open sequencing 5:3
Open stitch creator 6:3
Optional accessories 2:5, 4:8, 4:17, 4:19, 4:20, 8:2
Optional presser foot icon 4:20
Overview
- Machine 1:8
- Personal files 7:2
- Sequencing 5:2
- Sewing mode 4:2
- Stitch Creator™ feature 6:2
- Stitches 1:12
- Touch screen 3:2

P

Pack away after sewing 2:3
Paste 7:2, 7:4
Patchwork program 4:11, 4:12, 4:18
Personal files 4:3, 7:2-7:4
personal files pop-ups 7:4
PFAFF® Color Touch Screen 1:8
Piecing the quilt top 4:18
Pop-up messages
- Available disk space low 7:4
- Machine needs to rest 4:21
- Not an editable stitch 5:6, 6:6
- Remove sensormatic buttonhole foot 4:21
- Sequence out of range 5:6, 6:6
- System busy 7:4

Position of the marked stitch point 6:5
Power cord 1:10
Presser feet 1:11
Presser foot 1:8
Presser foot bar 1:8
Presser foot, change 2:9
Presser foot down and pivot toggle 3:6
Presser foot height 2:3, 4:9
Presser foot holder 1:8
Presser foot pressure 3:4
Presser foot recommendation 4:2
Presser foot up and extra lift toggle 3:6
Pre-tension device for threading and bobbin winding 1:9
Pre-tension disc 2:5

Q

Quick help 3:2, 4:8, 4:20
Quilting 4:18
- Crazy quilt stitching 4:19
- Patchwork program 4:18
- Piecing the quilt top 4:18
- Straight stitch needle plate 4:18

R

Removable bobbin holder 1:9
Removable tray for presser feet 1:9
Remove presser foot 2:9
Remove Sensormatic buttonhole foot 4:21
Rename a file or folder 7:4
Rename file or folder 7:2, 7:4
Repeat a manual buttonhole 4:16
Replace a stitch or letter 5:4
Replacing the needle plate 8:2
Reverse 1:8
Reverse button 3:7, 4:10, 4:11
Reverse indicator 3:7

S

Satin and edge stitches 1:15
Save to personal files 4:2
Save to personal menu 4:2, 4:7, 5:5
Saving a sequence 5:5
Saving a stitch 6:6
Screen 1:8
Screen, lock 3:3
Screen saver 3:3
Screwdriver 1:10
Scroll bar 3:5
Seam ripper 1:10
Selected stitch number 4:2
Selecting a font 4:3
Selecting a stitch 4:3
Selection menu 3:2, 3:5, 4:3
Select stitch point 6:2, 6:3
Sensormatic buttonhole 4:15
Sensormatic buttonhole foot 5A 1:11
Sensormatic buttonhole foot, attach 4:15
Sensormatic buttonhole foot socket 1:8
Sensormatic free-motion 4:8, 4:9
Sensormatic free-motion foot 6A 1:11, 4:9
Sequence adjustments 5:5, 5:6
Sequence commands 5:4
Sequence, delete 5:5
Sequence out of range 5:6, 6:6
Sequences in Stitch Creator™ feature 5:6
Sequencing 4:2, 4:12, 5:2–5:6
Sequencing pop-ups 5:6
Settings menu 3:2, 3:3
Sewing a sequence 5:5
Sewing a stitch 6:6
Sewing hems in heavy fabric 4:13
Sewing in zippers 4:13
Sewing mode 4:2, 4:2–4:22
Sewing options 4:2
Sewing pop-ups 4:21

www.sewshop.eu

Sewing programs 4:11
Patchwork program 4:11
Single stitch program 4:11
Tapering program 4:11
Sewing settings 3:4
Sewing techniques 4:13
Sewing thread 2:11
Sew on a button 4:17
Single ribbon stitches (720) 1:16, 4:21
Single stitch program 4:11
Smocking stitches 1:15
Software version 3:5
Special sewing techniques 4:20
Speed control 1:8, 3:6, 4:6
Speed control symbol 4:2
Spool cap 1:10, 2:4
Spool pins ..... , 2:4
Auxiliary spool pin 2:4
Horizontal position 2:4
Main spool pin 2:4
Vertical position 2:4
Spring foot free-motion 4:8
Stacking stitches (720) 1:16, 4:21
Stabilizer recommended 4:2
Stabilizers 2:11
Standard presser foot with IDT™ system 0A 1:11
Start/stop 1:8, 3:6, 3:7
Start view 4:2
Sticky stabilizer 2:11
Stippling stitches 1:14
Stitch category 4:3, 5:3
Stitch Creator™ feature 4:2, 6:2–6:6
Stitch Creator™ feature pop-ups 6:6
Stitch, delete 4:7
Stitch density 4:2, 4:4, 4:5, 5:2, 5:4
Stitches 4:3, 5:3
Stitch field 6:2
Stitch fonts 4:3, 5:3
Stitch-in-the-Ditch 4:19
Stitch length 4:2, 4:4, 4:5, 5:2, 5:4
Stitch overview 1:12
Stitch point, definition 6:3
Stitch point side position 6:2, 6:5
Stitch positioning 4:2, 4:4, 5:2, 5:4
Stitch repetition 4:17
Stitch restart 1:8, 3:6
Stitch, select 4:3
Stitch settings 4:4
Stitch width 4:2, 4:4, 5:2, 5:4
Stitch width safety 3:4, 4:2, 4:8
Stop command 5:4
Straight stitch needle plate 1:10, 4:18
Stretch needle 2:10
Stylus 1:10
Stylus holder 1:8
System busy 7:4

T

Take-up lever 2:5
Tapering program 4:11
Tear-away stabilizers 2:11
Thread cutter 1:8
Threading for twin needle 2:6
Threading the machine 2:5
Needle threader 2:5
Threading for twin needle 2:6
Thread net 1:10
Thread sensor 2:6
Thread snips 1:8, 3:7, 4:10
Thread snips command 5:4
Thread snips for sewing 3:4
Thread tension 4:2, 4:6
Thread tension compensation 3:5
Three-step zigzag stitch 4:14
Tie-off beginning 4:10
Tie-off command 5:4
Tie-off end 4:10
Tie-off options 4:2, 4:10
Touch functions
Move 6:2, 6:5
Zoom/Pan 6:2, 6:5
Touch screen 3:2
Touch screen, calibrate 3:3
Transparent thread 2:11
Triple stitch 6:2, 6:4
Troubleshooting 8:3
Twin needle 2:6, 3:4, 4:2
Twin needle width 3:4

U

Universal needle 2:10
Unpacking 2:2
Update your machine 2:12
USB device 4:3, 7:2, 7:3
USB port 2:12
Connect to and remove from USB port 2:12
USB ports 1:8
Utility stitches 1:12

W

Water Soluble Stabilizer 2:11
Wheel 6:2

Z

Zipper foot with IDT™ system 4 ..... 1:11
Zippers, sewing 4:13
Zoom 6:5
Zoom/Pan 6:5

www.sewshop.eu

You have purchased a modern, updatable sewing machine. As we regularly release software updates, it is possible that there may be some differences between the machine software and the software described in the owner's manual. Consult your local authorized PFAFF® dealer, and be sure to visit our website at www.pfaff.com for the latest updates of both the software and the Owner's Manual.

We reserve the right to change the machine equipment and the assortment of accessories without prior notice, or make modifications to the performance or design.

Such modifications, however, will always be to the benefit of the user and the product.

Intellectual Property

Patents protecting this product are listed on a label positioned underneath the Sewing Machine.

PFAFF, EXPRESSION, STITCH CREATOR, PERFECTION STARTS HERE and IDT (image) are trademarks of Singer Sourcing Limited LLC.

www.sewshop.eu

Please note that on disposal, this product must be safely recycled in accordance with relevant National legislation relating to electrical/electronic products. Do not dispose of electrical appliances as unsorted muncipal waste, use separate collection facilities. Contact your local government for information regarding the collection systems available. When replacing old appliances with new ones, the retailer may be legally obligated to take back your old appliance for disposal free of charge.

If electrical appliances are disposed of in landfills or dumps, hazardous substances can leak into the groundwater and get into the food chain, damaging your health and well-being.

Manufacturer
VSM Group AB
Drottninggatan 2, SE-56184, Huskvarna, SWEDEN

www.pfaff.com

www.sewshop.eu

471 0527-26A • English • InHouse • © 2018 Singer Sourcing Limited LLC. All rights reserved • Printed on environmentally-friendly paper.