JUKI®

2-Needle, 2/3/4-Thread Overlock Sewing Machine

MO-114D/104D

INSTRUCTION MANUAL

www.sewshop.eu

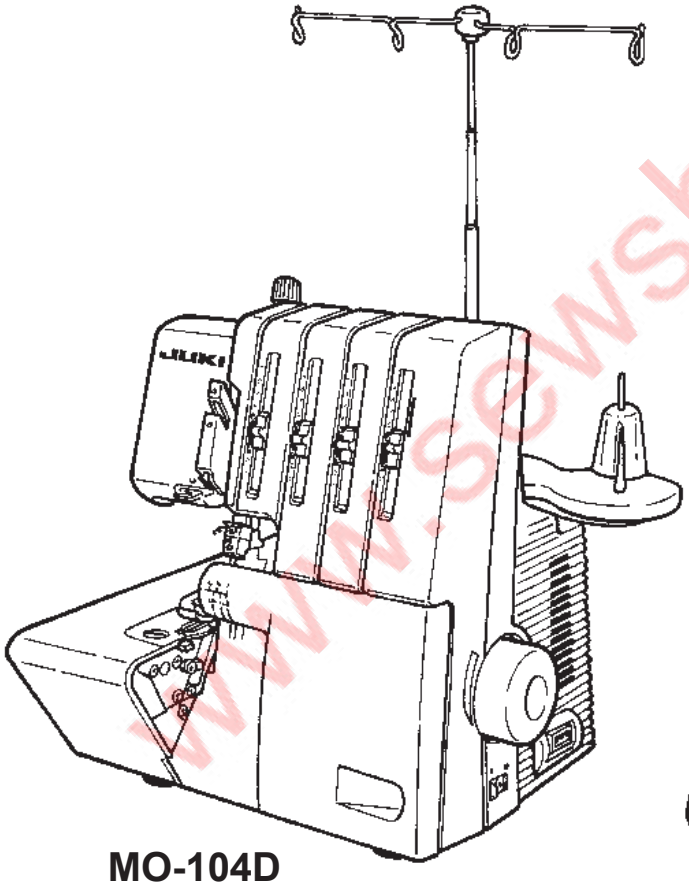

MO-104D

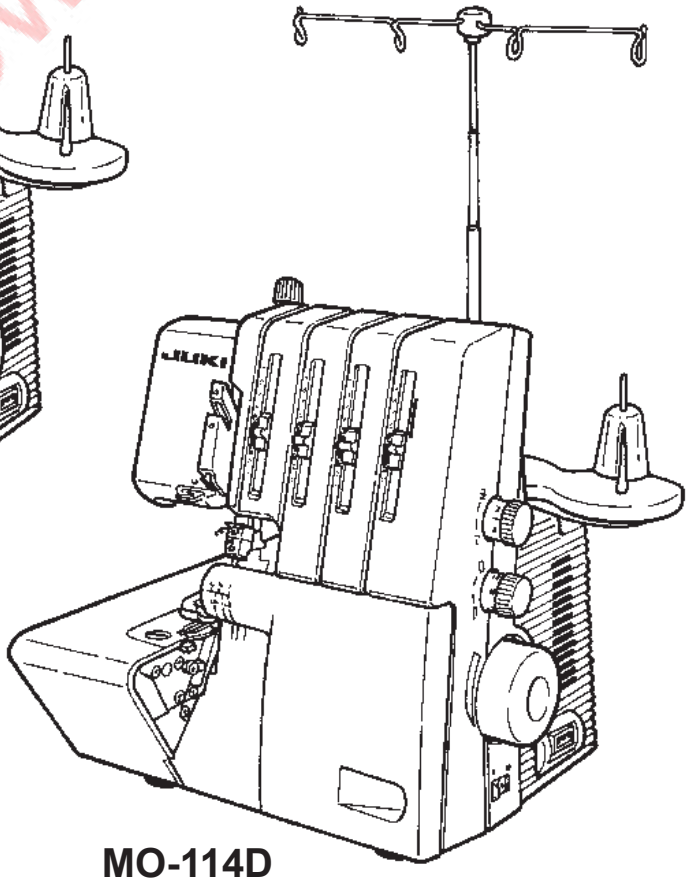

MO-114D

IMPORTANT:

Read all safety regulations carefully and understand them before using your sewing machine. Retain this instruction manual for future reference.

“IMPORTANT SAFETY INSTRUCTIONS”

When using an electrical appliance, basic safety precautions should always be followed, including the following: Read all instructions before using this sewing machine.

“DANGER — To reduce the risk of electric shock:”

1. The appliance should never be left unattended when plugged in.
2. Always unplug this appliance from the electric outlet immediately after using and before cleaning.

“WARNING — To reduce the risk of burns, fire, electric shock, or injury to persons:”

1. Do not use the appliance as a toy. Caution is advised when the appliance is used by children, or near children. This sewing machine can be used by children aged from 8 years and above and persons with reduced physical, sensory or mental capabilities or lack of experience and knowledge if they have been given supervision or instruction concerning use of the sewing machine in a safe way and understand the hazards involved. Children shall not play with the sewing machine. Cleaning and user maintenance shall not be made by children without supervision.
2. Use this appliance only for its intended use as described in this manual. Use only attachments recommended by the manufacturer as contained in this manual.
3. Never operate this appliance if it has a damaged cord or plug, if it is not working properly, if it has been dropped or damaged, or dropped into water. Return the appliance to the nearest authorized dealer or service center for examination, repair, electrical or mechanical adjustment.
4. Never operate the appliance with any air openings blocked. Keep ventilation openings of the sewing machine and foot control free from the accumulation of lint, dust, and loose cloth.
5. Keep fingers away from all moving parts. Special care is required around the sewing machine needle.
6. Always use the proper stitch plate. The wrong plate can cause the needle to break.
7. Do not use bent needles.
8. Do not pull or push fabric while stitching. It may deflect the needle causing it to break.
9. Do not carry out sewing with a marking pin stuck in the material since doing so can cause knife/needle breakage. In addition, do not attempt to cut anything other than fabric and thread with the upper/lower knives.
10. Switch the sewing machine off “O” when making any adjustments in the needle area, such as threading needle, changing needle, threading looper, or changing presser foot and the like.
11. Always unplug the machine from the electrical outlet when removing covers, when covers are opened to thread the loopers, when lubricating or when making any other user servicing adjustments mentioned in the instruction manual.
12. Never drop or insert any object into any opening.
13. Do not use outdoors.
14. Do not operate where aerosol (spray) products are being used or where oxygen is being administered.
15. To disconnect, turn all controls to the off “O” position, then remove plug from outlet.
16. Do not unplug by pulling on cord. To unplug, grasp the plug, not the cord.
17. Basically, the machine should be disconnected from the electricity supply when not in use.
18. If the power cord of this appliance is damaged, it must be replaced with a special cord by your nearest authorized dealer or service center.
19. (Except USA/Canada) This machine is provided with double insulation.
    Use only identical replacement parts. See instructions for servicing Double-Insulated machine.

“SERVICING DOUBLE-INSULATED PRODUCTS (Except USA / Canada)”

In a double-insulated product, two systems of insulation are provided instead of grounding. No grounding means is provided on a double-insulated product nor should a means for grounding be added to the product. Servicing a double-insulated product requires extreme care and knowledge of the system and should only be done by qualified service personnel. Replacement parts for a double-insulated product must be identical to those parts in the product. A double-insulated product is marked with the words DOUBLE INSULATION or DOUBLE INSULATED.
The symbol ⧈ may also be marked on the product.

“SAVE THESE INSTRUCTIONS”

“This overlock sewing machine is intended for household use only.”

www.sewshop.eu

Congratulations on your purchase of a JUKI sewing machine.
Please be sure to read safety precautions in “To use the sewing machine safely” in the Instruction Manual before use to fully understand the functions and operating procedures of the sewing machine so as to use the sewing machine for a long time.
After you have read the Instruction Manual, please be sure to keep it together with the warranty so that you can read it whenever necessary.

To use the sewing machine safely

Marks and pictographs included in the Instruction Manual and shown on the sewing machine are used so as to ensure safe operation of the sewing machine and to prevent possible risk of injury to the user and other people.
Warning marks are used for different purposes as described below.

⚠ **WARNING**	**Indicates that there is a possible risk of death or serious injury if this mark is ignored and the sewing machine is used in a wrong manner.**
⚠ **CAUTION**	**Indicates the operation, etc. which can cause a possible risk of personal injury and/or physical damage if this mark is ignored and the sewing machine is used in a wrong manner.**

Pictographs mean the following:

	Danger warning which is not specified		**There is a risk of electrical shock**		**There is a risk of fire**		**There is a risk of injury to hands, etc.**
	Prohibited matter which is not specified		**Disassembly/alteration is prohibited**		**Do not place fingers under the needle**		**Do not pour oil, etc.**
	Generally required behavior		**Disconnect the power plug**				

www.sewshop.eu

⚠ WARNING

For the combination of the material and the thread and needle, in particular, refer to the explanation table in “Replacement of the needle”.
If the needle or thread does not match the material used such as in the case that an extra heavy-weight material (e.g., denim) is sewn with a thin needle (#11 or higher), the needle can break resulting in an unexpected personal injury.

Other precautions

- Do not put the sewing machine under the direct sunlight or in a humid place.

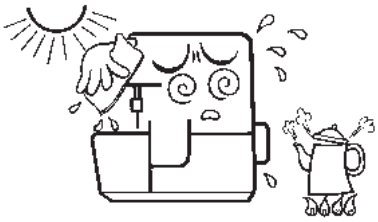

- Do not wipe the sewing machine with solvent such as thinner.

  When the sewing machine is soiled, put a small quantity of neutral detergent on a piece of soft cloth and carefully wipe off the sewing machine with it.

Be aware that the following state can take place since the sewing machine incorporates semi-conductor electronic parts and precise electronic circuits.

- Be sure to use the sewing machine in the temperature range from 5ºC to 40ºC.
  If the temperature is excessively low, the machine can fail to operate normally.

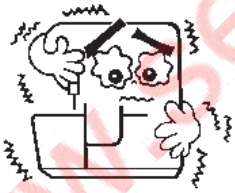

* The operating temperature of the sewing machine is between 5ºC and 40ºC. Do not use the sewing machine under the direct sunlight, near the burning things such as a stove and candle, or in a humid place. By so doing, the temperature in the interior portion of the sewing machine can rise or the coating of the power cord can melt, causing fire or electrical shock.

www.sewshop.eu

Contents

Safety instructions 1-3
Contents 4
Details of the machine 5,6
• Accessories 6
Preparing the machine 7
• Foot control 7
• Thread stand 8
• Thread, cones, spools 8

Using the machine

• Main switch 8
• Presser foot lifter 8
• Changing the presser foot 9
• Looper cover 9
• Cloth plate 9
• Handwheel 10
• Raising the upper knife 10
• Inserting the needles 11
• Needles and machine 11

Threading

• Preparation 12
• Upper and lower looper 13-15
• Right and left needles 16,17

Trial sewing

• Sewing test 18
• Thread tension 19
• Adjusting tensions 19

Adjustments and settings

• Stitch length 20
• Cutting width 20
• Differential feed 21
• Gathering 22
• Upper looper converter 23
• Roll hemming 23
• Presser foot pressure 24

Practical sewing

• Thread breakage 24
• Unpicking seams 24
Stitch chart 25

Maintenance

• Replacing the knives 26
• Replacing the bulb 26
• Cleaning and lubricating 26
Trouble shooting guide 27
Technical data 28
Optional accessories 29

www.sewshop.eu

MO-114D

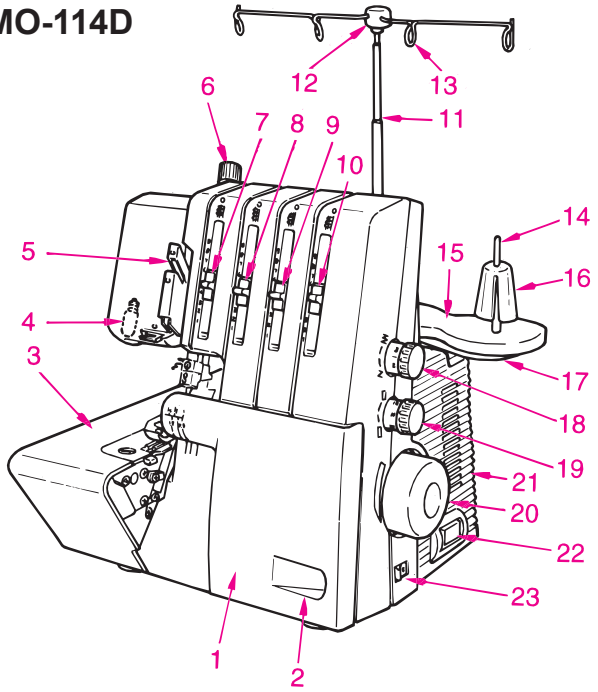

MO-104D

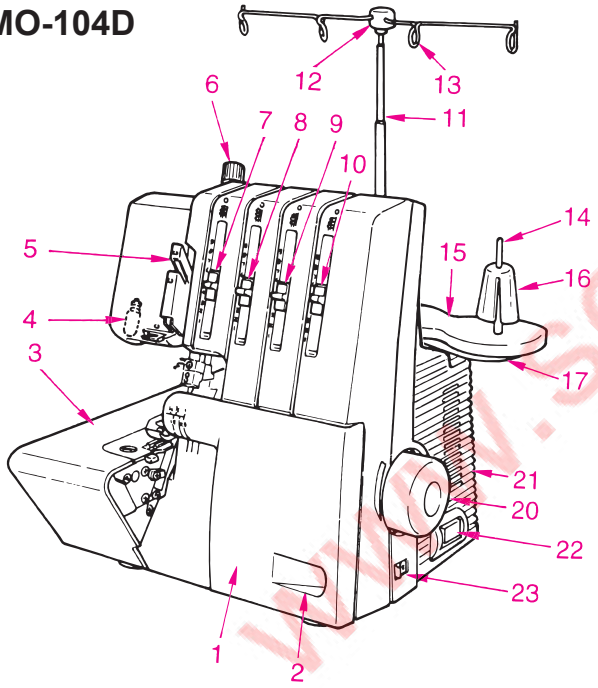

Details of the machine

1. Looper cover with built in knife guard
2. Looper cover opening indent
3. Cloth plate
4. Sewing light
5. Thread take-up cover
6. Foot pressure adjusting screw
7. Left needle thread tension lever
8. Right needle thread tension lever
9. Upper looper thread tension lever
10. Lower looper thread tension lever
11. Retractable support rod
12. Thread guide support
13. Open thread guide
14. Spool holder pin
15. Foam pad
16. Anti-vibration cone
17. Thread stand
18. Stitch length adjustment dial (MO-114D)
19. Differential feed adjustment dial (MO-114D)
20. Handwheel
21. Rear cover
22. Machine socket
23. Power/Light switch
24. Differential feed adjustment knob

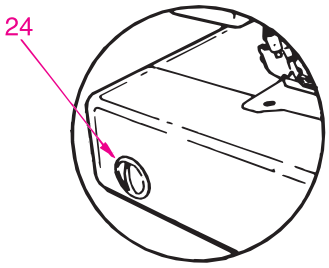

www.sewshop.eu

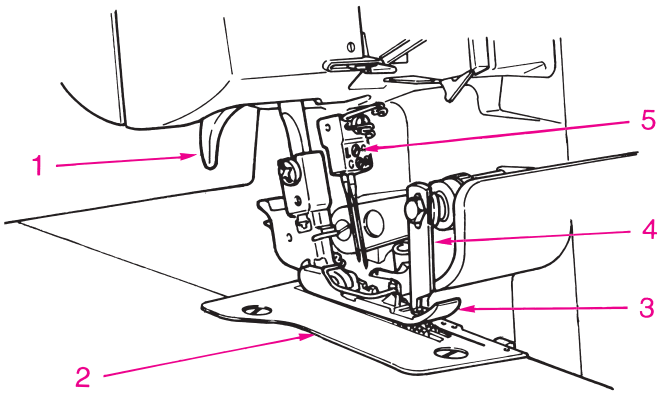

Details of the machine

1. Presser foot lifter
2. Stitch plate
3. Presser foot
4. Upper knife
5. Needle clamp

Details of the machine

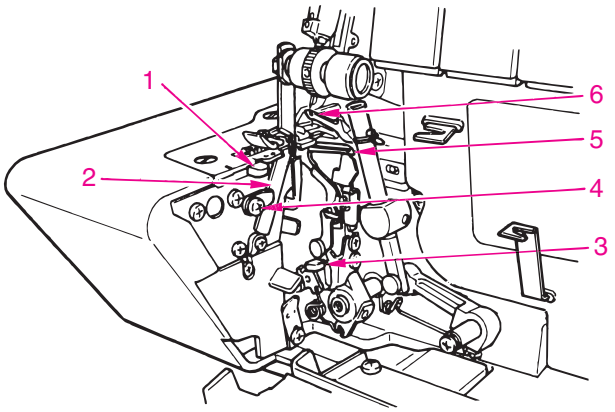

⚠ **Caution**	Be sure to turn off the power switch before opening the looper cover.

View with looper cover open

1. Selection lever for overlocking or rollhemming
2. Lower knife
3. Lower looper auto threader (MO-114D)
4. Lower knife set screw
5. Lower looper
6. Upper looper

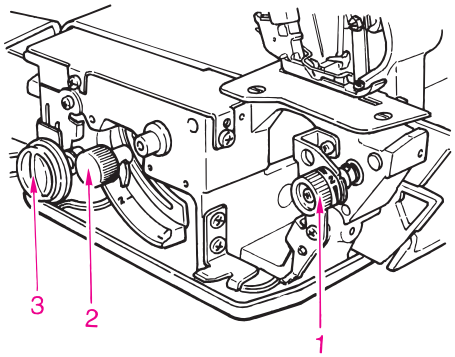

View with cloth plate open

1. Cutting width adjustment knob
2. Stitch length adjustment knob (MO-104D)
3. Differential feed adjustment knob (MO-104D)

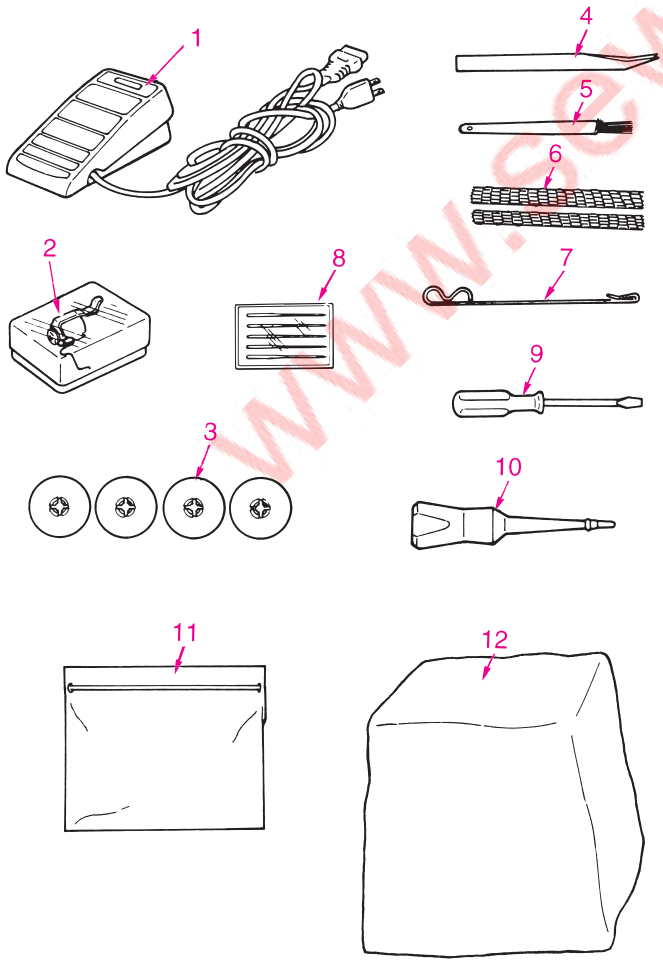

Accessories

1. Electronic foot control
2. Upper looper converter *
3. Spool caps
4. Tweezers
5. Cleaning brush/Needle inserter
6. Nets
7. Looper threader **
8. Needle set 130/705
9. Small screwdriver
10. Oiler
11. Accessory bag
12. Dust cover

* Optional for MO-104D

** Only for MO-104D

www.sewshop.eu

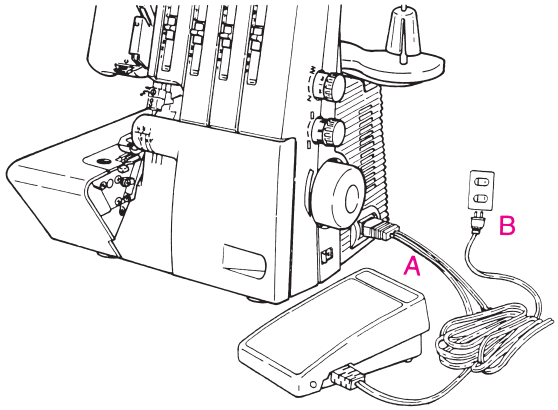

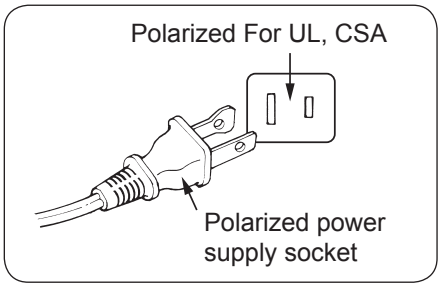

Attaching the foot control

Plug foot control into the machine socket (A) and then into the main socket (B). The foot control regulates the sewing speed. The sewing speed can be adjusted by increasing or decreasing the pressure on the foot control.

⚠ "WARNING"

This appliance has a polarised plug (one blade wider than the other). To reduce the risk of electrical shock, this plug is intended to fit into a polarised main socket only one way. If the plug does not fit fully in the polarised main socket, reverse the plug. If it still does not fit, contact a qualified electrician to install the proper polarised main socket. Do not modify the plug in any way.(for USA, Canada only).

* Use only the foot control model YC-482 (USA, Canada), YC-483N (220-240V).

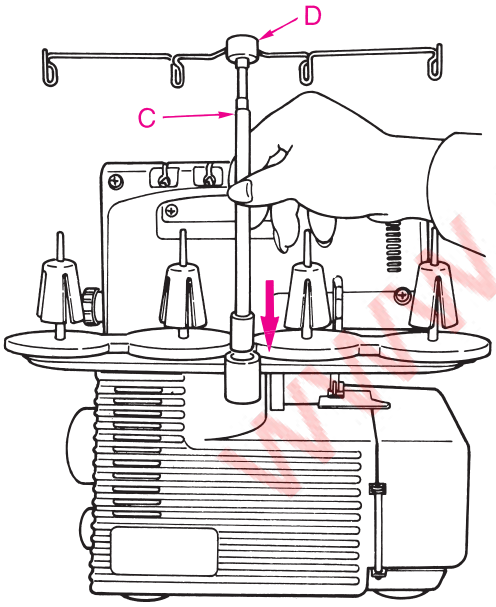

Thread stand

Push the support rod firmly into the socket on the back of the machine. Raise the support rod (C) fully, turning slightly until the position catches engage. Position the thread guide (D) on the thread stand so that the arrow is to the front.

www.sewshop.eu

Preparing the machine

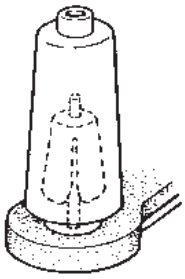

Thread / cones / spools

The anti-vibration cone should be used with the wider edge at the bottom on the spool holder pin when sewing with cones.

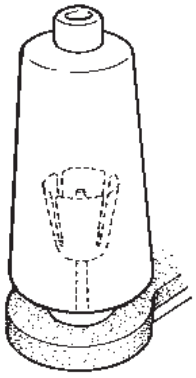

Large spools

If large industrial spools are used, position the anti-vibration cone upside down on the spool holder pin, i.e. with the wider edge at the top.

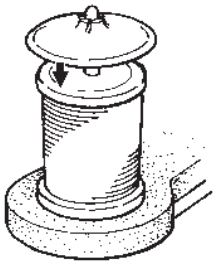

Household spools

Remove the anti-vibration cones. Place spools on spool holder pins and push the spool caps on with the rounded side downwards.

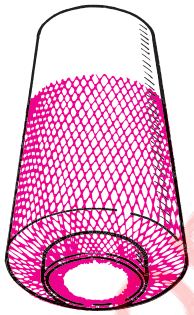

Thread nets

If the threads slip and gets twisted, cover the spools of upper and lower looper with the nets supplied in the accessory bag.

www.sewshop.eu

Using the machine

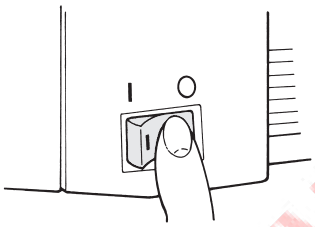

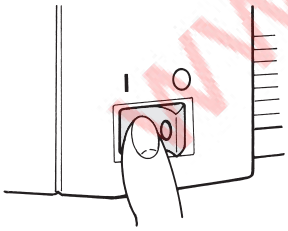

Power/light switch

The power/light switch is conveniently placed on the handwheel side of the machine in front of the socket.

O = Off

I = On with light

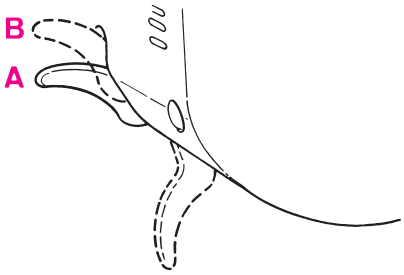

Two step presser foot

To raise the presser foot, lift the presser foot lever on the rear of the machine, until it engages (A). It can be raised again to the maximum height and held in this position to provide more space between presser foot and stitch plate.(B). Note: When the presser foot is raised, all the tensions are released making it easier to thread the machine.

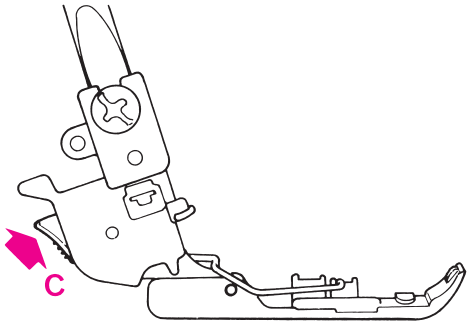

Changing the presser foot

• Switch the machine off (Power switch to “0”).

- Raise the presser foot.
- Turn the handwheel towards you until needles are fully raised.

Press the catch (C) to release the presser foot from the clamp. Raise the presser foot to the highest position (B) and remove the presser foot to the left. To attach the presser foot, place it under the shaft. The groove in the shaft should line up exactly with the presser foot pin (D). Lower the shank and the presser foot will engage automatically.

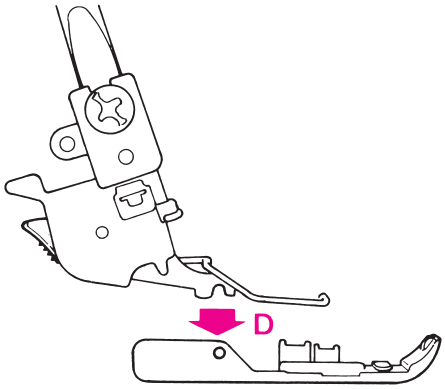

www.sewshop.eu

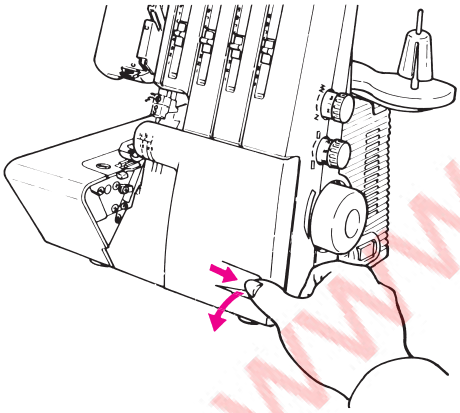

Looper cover

To open the looper cover press the indent to the right with your thumb and lower the cover towards you. To close, push it up and press lightly to the right. The cover engages automatically.

CAUTION: Moving parts - to reduce the risk of injury, switch machine off (“O”). Before servicing and when opening looper cover and cloth plate. Close before using!

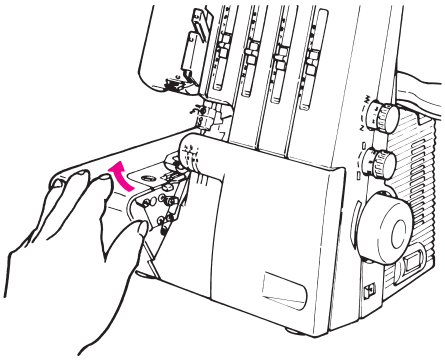

Cloth plate cover

Opening and closing the cloth plate:
Opening: Push the cloth plate to the left.
Closing: Push the cloth plate to the right.

CAUTION: Moving parts - to reduce the risk of injury, switch machine off (“O”). Before servicing and when opening looper cover and cloth plate. Close before using!

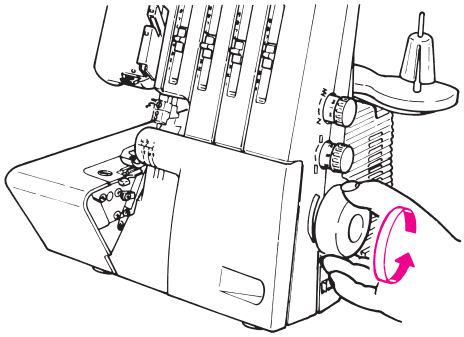

Handwheel

The handwheel turns forward, i. e. in the same direction as on a household sewing machine.

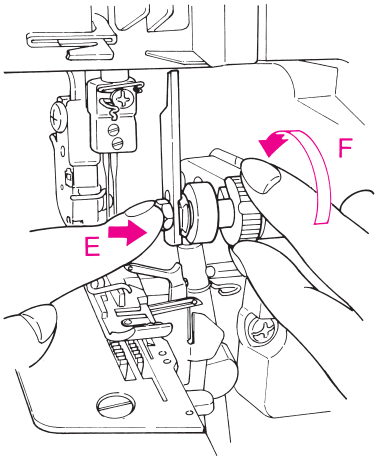

Raising the upper knife

• Switch the machine off (Power switch to “0”).

- Disconnect machine from electricity supply.
- Turn the handwheel towards you until needles are fully raised.
- Open the looper cover.

Press the upper knife holder (E) to the right. Turn the knob clockwise (F) until the knife engages into position as illustrated (G).

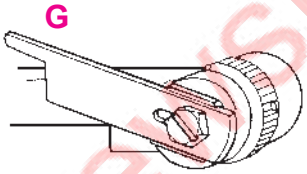

www.sewshop.eu

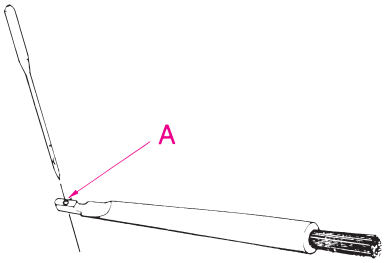

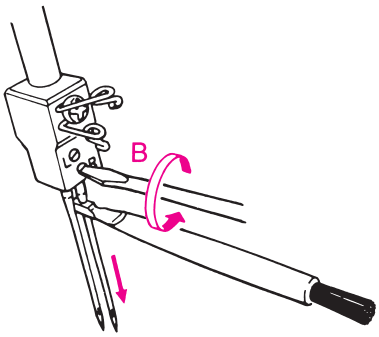

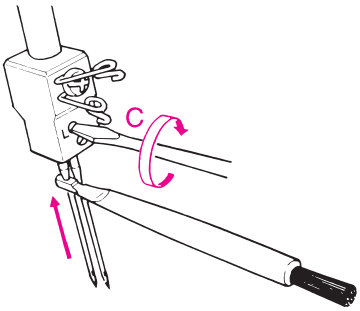

Inserting needles

Needles can be inserted quickly and easily with the practical cleaning brush and needle inserter (A).

• Switch the machine off (Power switch to “0”).

- Disconnect machine from electricity supply.Turn the handwheel towards you until needles are fully raised.
- Lower the presser foot.

Using the small screwdriver, loosen the needle setscrews and remove the needles (B). Place the right hand needle, flat side towards the back, into the hole of the needle inserter and insert the needle as far as possible into the needle clamp. Tighten the setscrew lightly and then insert the lefthand needle in the same way and tighten both setscrews (C).

www.sewshop.eu

Needle and machine

Your overlock machine is equipped with needle system 130/705 H (household sewing machine needles). These should be purchased when replacement needles are required. Use needles no. 70 - 90 on your machine.

Preparation / Tips

- **Switch the machine off (Power switch to “0”).**
- **Disconnect machine from electricity supply.**
- Support rod with thread guide must be fully raised.
- Open looper cover and cloth plate.
- Turn the handwheel towards you until the needles are fully raised.
- Raise the upper knife.
- Raise the presser foot. The tension is automatically released.

Thread the machine carefully and in the correct sequence.

Invaluable threading aids simplify threading:

- Colored threading illustration
- Color coded thread path on the machine
- Threading accessories

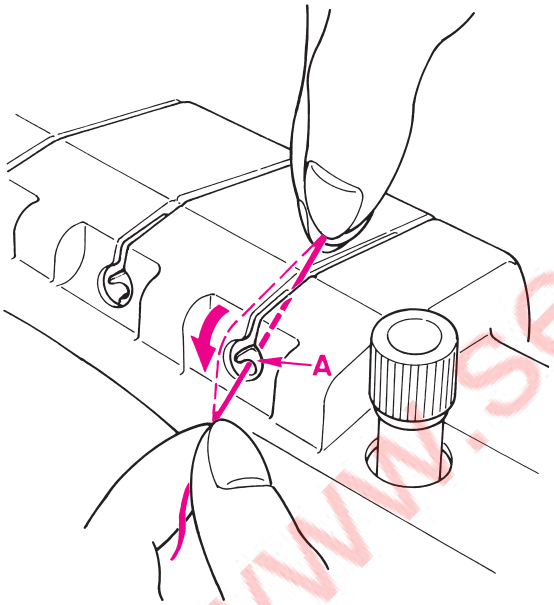

First thread guide on the Machine

Take the thread with both hands and lay it in the groove. Press the thread down into the 1st guide on the machine until it clicks into place.

www.sewshop.eu

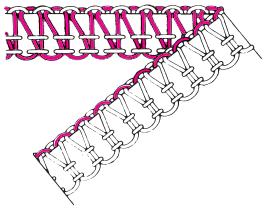

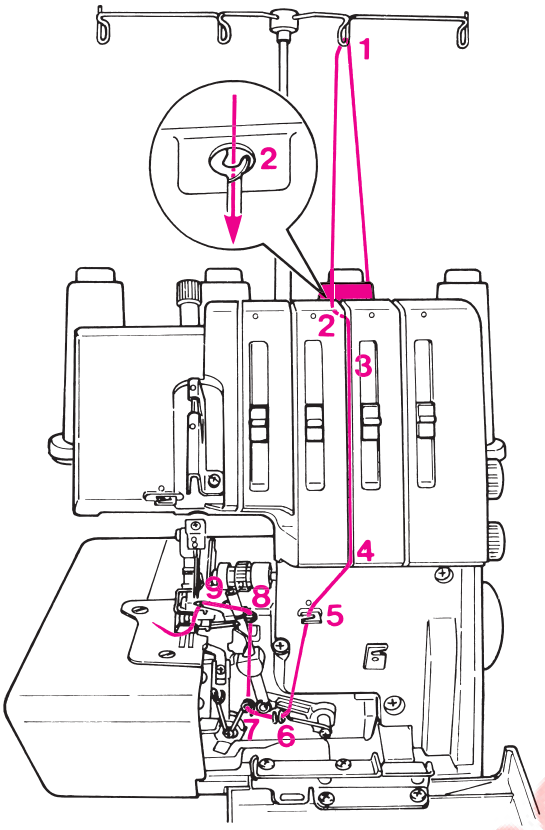

1. Upper looper thread, blue markings

Place the spool on the spool holder pin as illustrated.

(1) Bring the thread up from the spool and lay it from back to front into the guide (second from right).

(2) Take the thread with both hands and lay it in the groove. Press the thread down into the 1st guide on the machine until it clicks into place.

(3) Slip the thread through the groove.

(4,5,6,7,8) Thread the guides, blue markings.

(9) Turn the handwheel until the upper looper is in the position as illustrated. Thread the looper eye.

(10) Lift the presser foot, place thread underneath and lower the presser foot.

Note:

Do not thread the upper looper when sewing with the upper looper converter.

www.sewshop.eu

MO-104D

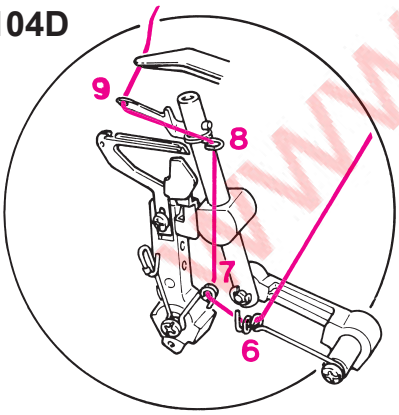

MO-114D

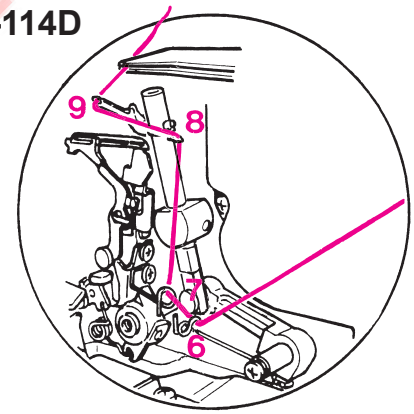

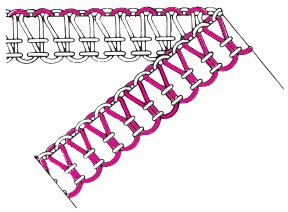

MO-104D

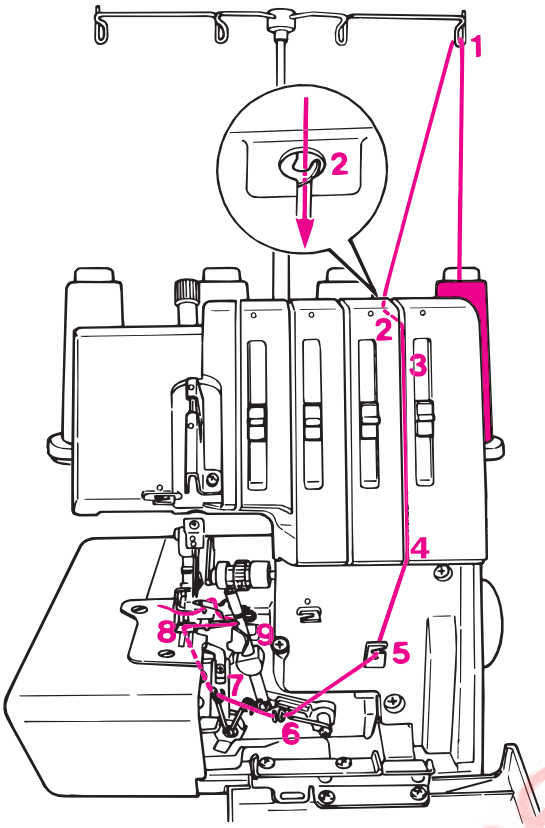

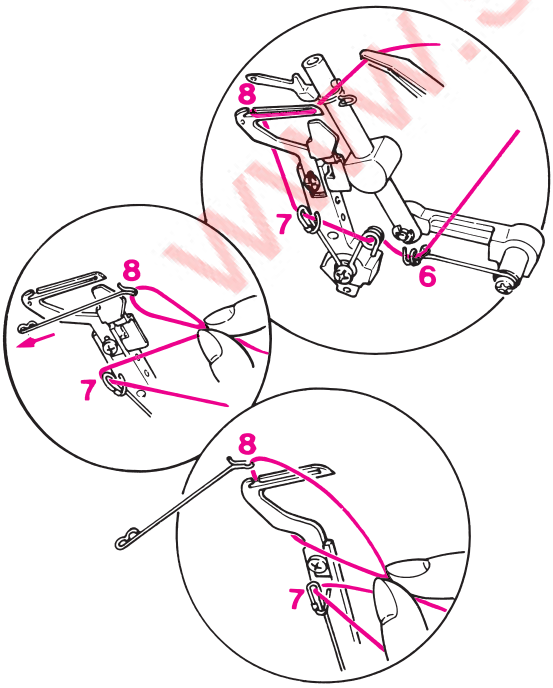

2. Lower looper thread, red markings

Place the spool on the spool holder pin as illustrated.

(1) Bring the thread up from the spool and lay it from back to front into the guide (right one).

(2) Take the thread with both hands and lay it in the groove Press the thread down into the 1st guide on the machine until it clicks into place.

(3) Slip the thread through the groove.

(4,5,6,7) Thread the guides.

(8) Turn the handwheel to bring the looper to its left most position. Make a thread loop with your right hand. Use the looper threader to catch the thread loop from the left and insert the loop from back to front into the slit on the lower looper. Pull and hold the thread to the right. Turn the handwheel to bring the looper to the right side.

(9) Thread the lower looper eye.

(10) Place the thread under the presser foot.

Note:

If the lower looper has to be re-threaded, cut both needle threads off at the needle and remove surplus thread from below. Thread the lower looper and then re-thread the needles.

www.sewshop.eu

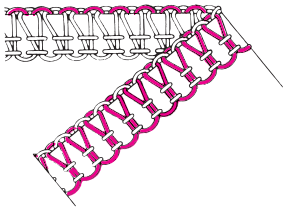

MO-114D

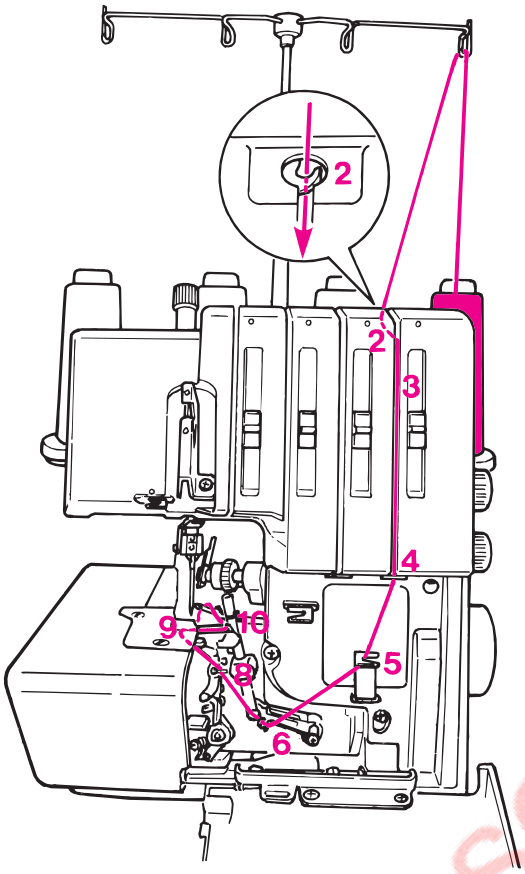

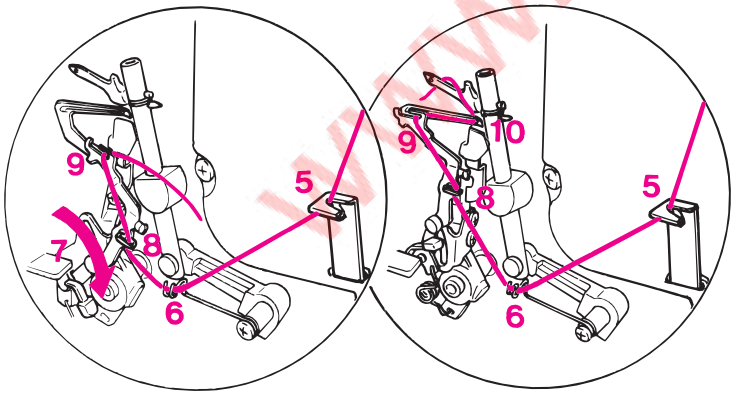

2. Lower looper thread, red markings

Place the spool on the spool holder pin as illustrated.

(1) Bring the thread up from the spool and lay it from the back to the front into the guide (right one).

(2) Take the thread with both hands and lay it in the groove. Press the thread down into the 1st guide on the machine until it clicks into place.

(3) Slip the thread through the groove.

(4,5,6) Thread the guides.

(7) Press the lever of the auto threader down.

(8,9) Thread the guide and then the slit on the threader. Push the auto threader lever up to return it to its normal position.

(10) Thread the lower looper eye and place the thread underneath the presser foot.

Note:

If the lower looper has to be re-threaded, cut both needle threads off at the needle and remove surplus thread from below. Thread the lower looper and then re-thread the needles.

www.sewshop.eu

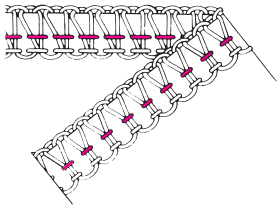

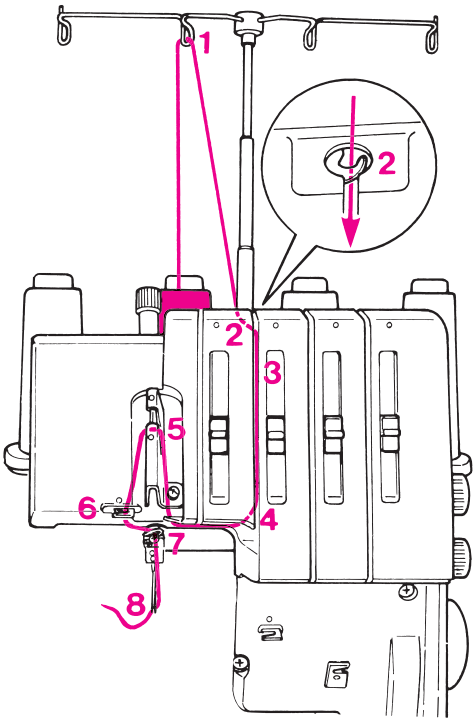

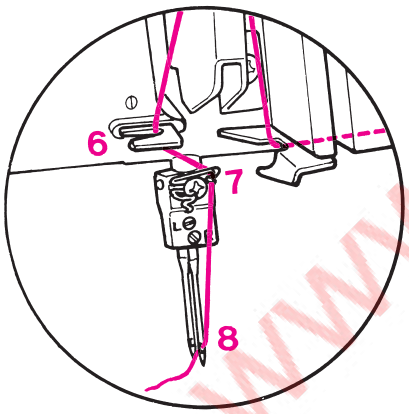

3. Right-hand needle, green markings

• Switch the machine off (Power switch to “0”).

Place the spool on the spool holder pin as illustrated.

(1) Bring the thread up from the spool and lay it from back to front into the guide (second from left)

(2) Take the thread with both hands and lay it in the groove. Press the thread down into the 1st guide on the machine until it clicks into place.

(3) Slip the thread through the groove.

(4,5) Take the thread under the thread guide plate to the left and through the take up.

(6) Thread the guide.

(7) Thread the guide on the needle clamp.

(8) Turn the handwheel towards you until the needles are fully raised. Thread the right hand needle front to back.

(9) Place the thread under the presser foot.

Note:

If the lower looper has to be re-threaded, cut both needle threads off at the needle and remove surplus thread from below. Thread the lower looper and then re-thread the needles.

www.sewshop.eu

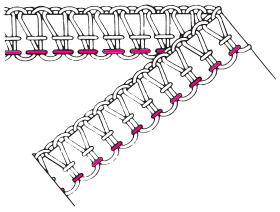

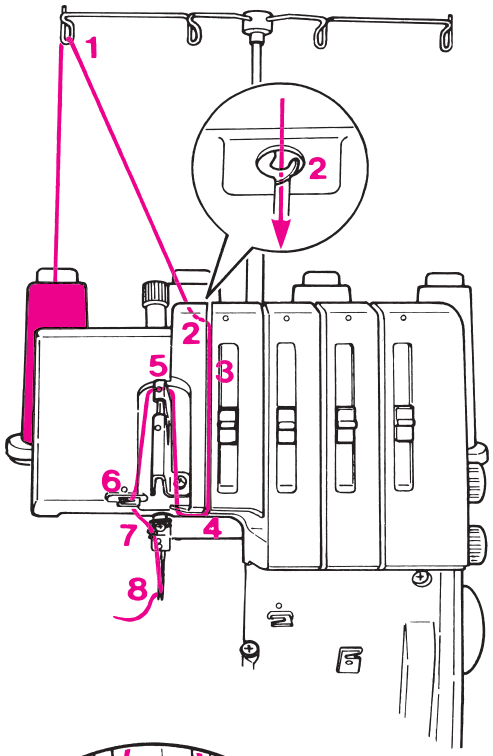

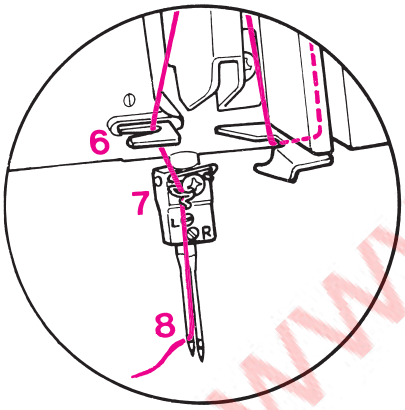

4. Left-hand needle, yellow markings

• Switch the machine off (Power switch to “0”).

Place the spool on the spool holder pin as illustrated.

(1) Bring the thread up from the spool and lay it from back to front into the guide (left one).

(2) Take the thread with both hands and lay it in the groove. Press the thread down into the 1st guide on the machine until it clicks into place.

(3) Slip the thread through the groove.

(4,5) Take the thread under the thread guide plate to the left and through the take up.

(6) Thread the guide.

(7) Thread the guide on the needle clamp.

(8) Turn the handwheel towards you until the needles are fully raised. Thread the left hand needle front to back.

(9) Place the thread under the presser foot.

When threading is complete, lower the upper knife, close the looper cover and cloth plate.

Note:

If the lower looper has to be re-threaded, cut both needle threads off at the needle and remove surplus thread from below. Thread the looper and then re-thread the needles.

www.sewshop.eu

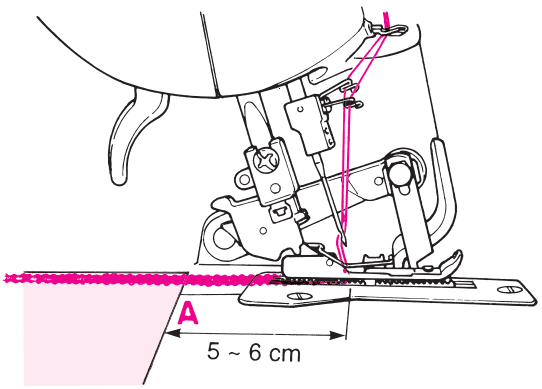

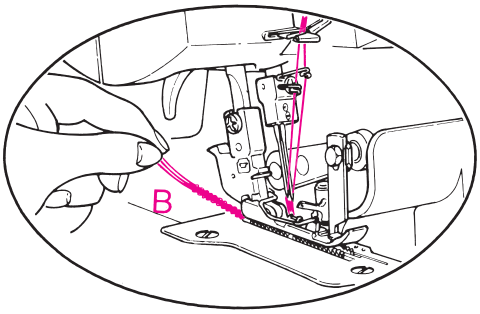

Sewing test

After threading make a trail run. Always use a double layer of fabric to properly check the stitch formation and thread tension.

- Switch the machine on (“I”).
- Set all tensions to 4.
- Stitch length, differential, cutting width (see adjustment & settings).
- Lower the upper knife.
- Lower the presser foot.
- Raise the front of the presser foot slightly with your thumb and position the fabric under the foot just up to the knife. Sew.
- At the end of the seam continue sewing a 8cm (3”) long thread chain (A). Cut threads.
- When using thread such as cordonet or similar, pull out the thread chain (B) carefully by hand as it might catch in the stitch plate.

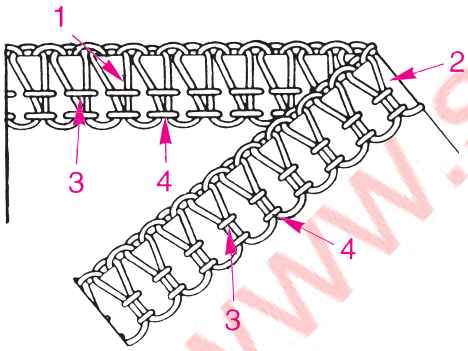

Check your trial run

1. Upper looper thread (blue).
2. Lower looper thread (red).
3. Right- hand needle thread (green).
4. Left- hand needle thread (yellow).

Perfect stitch formation is when both looper threads meet at the fabric edge. The needle threads form straight stitches for a stretchy and durable seam.

www.sewshop.eu

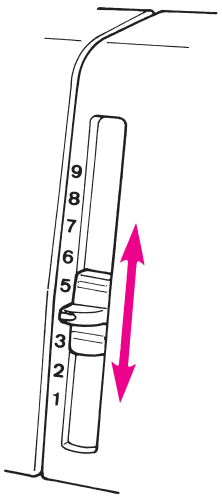

Thread tension

Thread tension should be adjusted to suit the various types of work. The ideal thread tension for most fabrics and threads is between 3 and 5. However this can vary quite considerably when special threads such as filament, woolly nylon, buttonhole twist (cordonet), pearl yarn or decorative threads are used. Infinitely variable adjustments can be made from 1-9. Move the lever upwards for more tension, move the lever downwards for less tension.

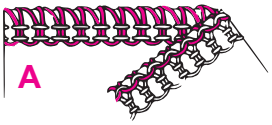

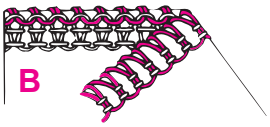

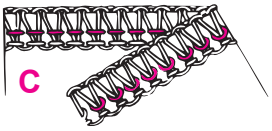

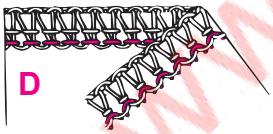

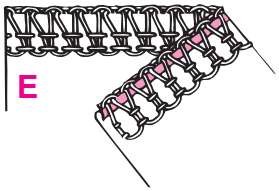

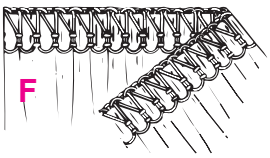

Adjusting the thread tension

Lower or raise the tension levers by only half or one number, then test sew again and check the result.

- The loops are formed on the underside:
  Tighten the upper looper thread tension, (blue) or loosen the lower looper thread tension, red (D).
- The loops are formed on the upper- side:
  Tighten the lower looper thread tension, (red) or loosen the upper looper thread tension, blue (E).
- The right- hand needle thread forms loops on the underside:
  Tighten the right- hand needle thread tension, green (F).
- The left- hand needle forms loops on the underside:
  Tighten the left- hand needle thread tension, yellow (G).
- The edge of the fabric curls up, tension for both looper threads is too tight:
  Loosen upper and lower looper thread tension, blue and red (H).
- The fabric puckers during sewing:
  Loosen the right- or left-hand needle thread tension, green or yellow (I).

www.sewshop.eu

MO-114D

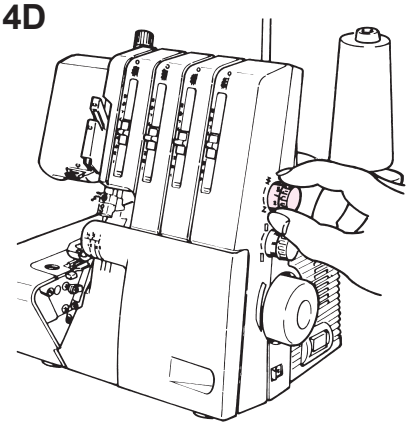

Stitch length

It can be adjusted while sewing. The stitch length is infinitely variable from 1-4mm. Most overlock work is done with a basic setting of 2.5mm.

MO-104D

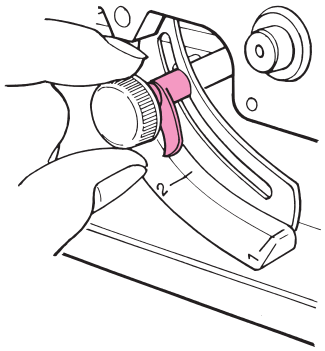

Stitch length

Switch the machine off (Power switch to “0”).

Open the cloth plate, loosen the knob and adjust to the desired length.
Tighten the knob and close the cloth plate.
The stitch length is infinitely variable from 1 - 4 mm.
Most overlock work is done with a basic setting of 2 - 3 mm.

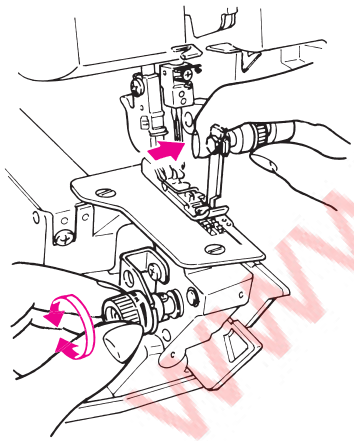

Cutting width

• Switch the machine off (Power switch to “0”).

- Open the cloth plate. Raise presser foot.
- Push upper knife to the right and turn cutting width dial in the direction desired.
- Close cloth plate cover and lower presser foot.

Cutting width:

1 = 3 - 5 mm seam width
2 = 4 - 6 mm seam width
3 = 5 - 7 mm seam width

The position of the lower knife determines the width of the seam.
Reduce cutting width (knife moves to the left) if the edges of the fabrics curl up (A).
Increase the cutting width (knife moves to the right) if the loops are too loose (B).

A

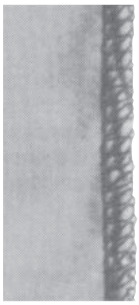

B

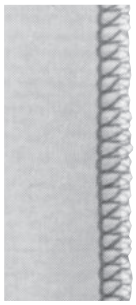

www.sewshop.eu

MO-114D

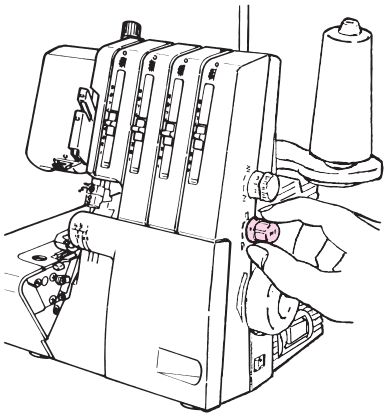

MO-104D

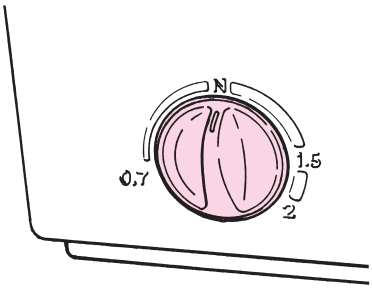

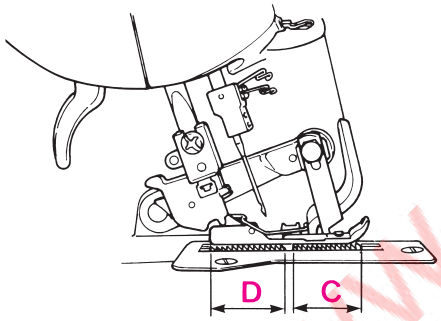

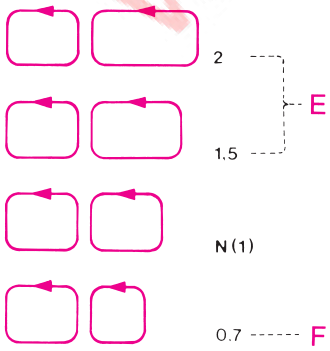

Differential feed

There are two feed dogs, one front (C) and one rear (D). The two feed dogs travel independently and the distance each feed dog travels during one complete movement can be adjusted. The differential feed prevents fluting or waving in knitted or stretch fabrics and or closely woven fabric (E).

Perfectly flat seams in knits or stretch fabrics

The distance travelled by the front feed dog should be greater than that of the rear feed dog. The front feed dog therefore, feeds an amount of fabric which the rear feed dog can take up behind the needle without stretching the fabric.

Pucker-free seams in nylon or closely woven fabrics

The distance travelled by the rear feed dog should be greater than that of the front feed dog. The front feed dog therefore, holds the fabric back so that the rear feed dog can take it up behind the needle without any puckering. (F).

www.sewshop.eu

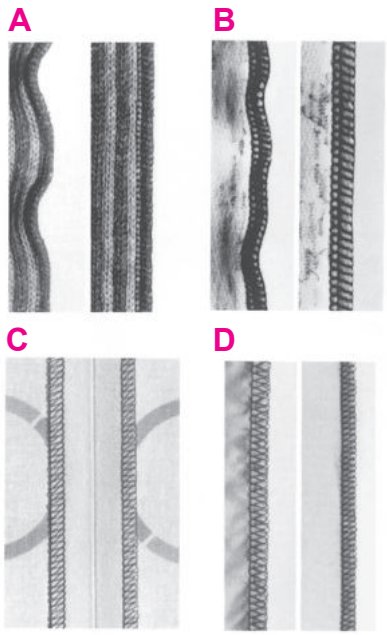

Adjusting the differential feed

The differential feed can be adjusted by simply turning the differential feed adjustment dial in the direction desired. Always make a trial run. The differential feed is infinitely variable and can be adjusted while sewing.

	Effect	Fabric
2	Wave-free seams (G)	Thick wool knits, hand knitted articles, very stretchy fabrics
1.5	Wave-free seams (H)	Cotton silk, synthetic jersey, sweatshirt fabrics and fine knits
N	Normal feed (I)	Woven fabrics
0.7	No puckering (J)	Fine nylon jersey, closely woven fabrics, lining fabric, satin, poplin

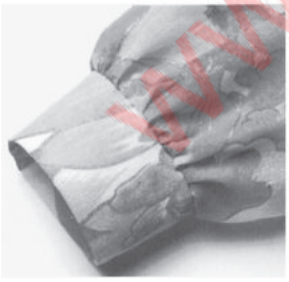

Gathering

Using the differential feed a single layer of fabric can be gathered before sewing it to a garment.
For example, sleeve heads and lower edges, yokes, lace edging or frills.

Adjustment:

- Stitch - 4 thread overlock
- Differential feed – 2
- Stitch length - 3-4
- Cutting width - 2-3

Increase the needle thread tension (6-8) for a tighter gather.

Note:
When sewing without differential feed, turn the adjustment knob to “N”.

www.sewshop.eu

MO-114D

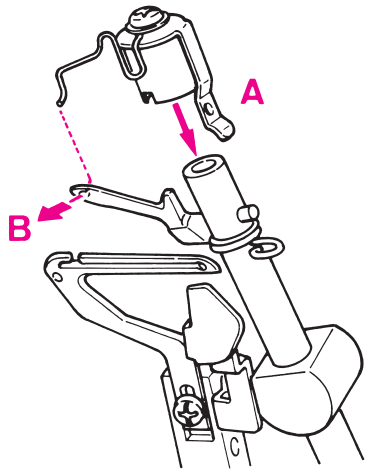

Upper looper converter (MO-114D)

Use the upper looper converter to sew stitches with one looper thread, such as 2-thread roll hem, 2-thread flatlock and 2-thread overlock.

- Turn the handwheel to lower the needles.
- Switch the machine off “O”.
- Open the looper cover.
- Attach the converter (accessory bag) to the upper looper arm (A). Insert the wire hook into the upper looper eye (B) from back to front.

The upper looper has now been converted, i.e. it no longer carries thread but it diverts the lower looper thread so that loops are formed round the edge of the fabric.

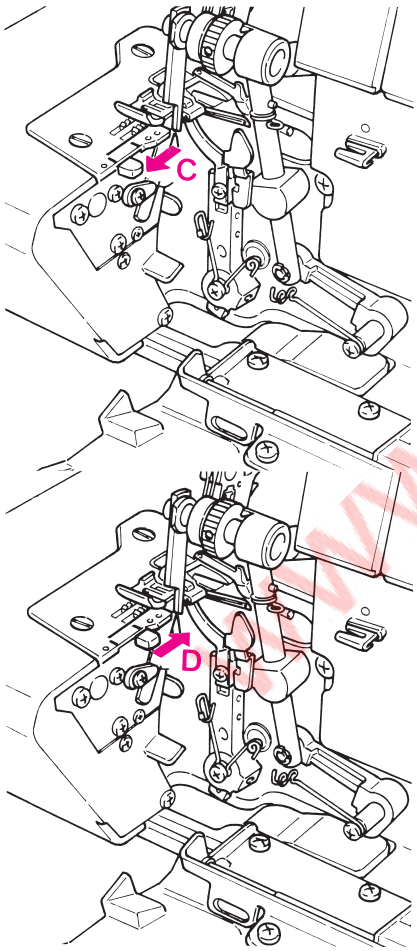

Roll hemming

- Turn the handwheel towards you until the needles are fully raised.
- For roll hemming, pull the selection lever to the front marking on the stitch plate, furthest from the presser foot (C).
- For overlocking push the selection lever forwards to the rear marking on the stitch plate, nearest the presser foot (D).

The roll hemmer is fully integrated in the machine.

The edge of the fabric will be automatically rolled over, producing a very narrow, fine seam or hem. Roll hemming is ideal for finishing edges on all fine fabrics, such as evening clothes, lingerie, scarves, frills and also for curtains and napkins.

www.sewshop.eu

Adjustments and settings

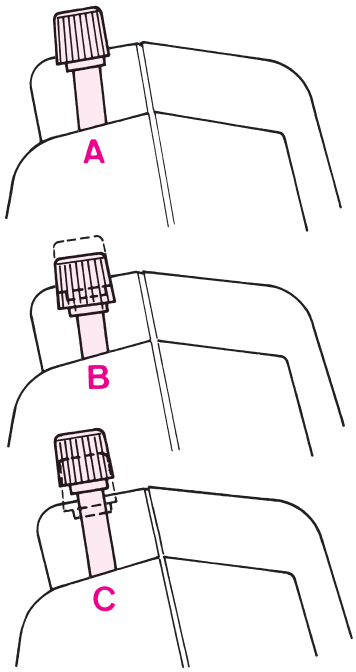

Presser foot pressure

The presser foot pressure is factory adjusted to a medium setting. Should you wish to adjust it, simply turn the knob in the direction desired:

Position of knob for normal pressure (A)

More pressure: for thick or stiff fabrics such as denim, tweed, firm linen (B)

Less pressure: for lightweight or sheer fabrics and knits (C).

Settings and practical sewing

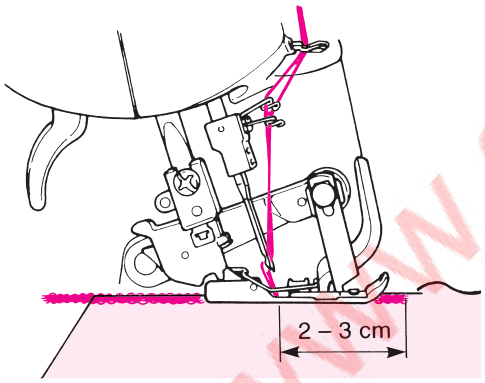

Thread breakage during sewing

Sew off immediately at an angle and remove the work. Re-thread. If the lower looper thread has broken, cut off both needle threads at the needles and remove the thread. First thread the looper then the needles. Start sewing again about 2-3 cm in front of where the thread broke.

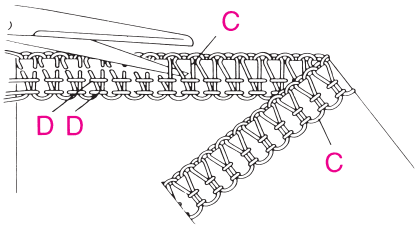

Unpicking seams

Using sharp scissors, cut the loops (C). Pull the needle thread (D) and the stitches will come undone.

www.sewshop.eu

Stitch chart

Stitch	Stitch width	Thread tension	Basic settings
4-Thread overlock with integrated safety seam	5-7 mm right and left needles	Left needle (yellow) 3-5 Right needle (green) 3-5 Upper looper (blue) 3-5 Lower looper (red) 3-5	Stitch length: 2.5 Cutting width: 2 Differential: N-2 (knits) 0.7-N (wovens)
3-Thread super stretch (MO-114D)	5-7 mm right and left needles	Left needle (yellow) 3-5 Right needle (green) 3-5 Lower looper (red) 3-5	Stitch length: 2.5 Cutting width: 1-2 Differential: N-2 Upper looper converter *
3-Thread overlock	3-5 mm right needle, 5-7 mm left needle	Left needle (yellow) 3-5 Right needle (green) 3-5 Upper looper (blue) 3-5 Lower looper (red) 3-5	Stitch length:2.5 Cutting width: 2 Differential: N-1.5 (knits) 0.7-N (wovens)
3-Thread Flatlock	3-5 mm right needle, 5-7 mm left needle	Left needle (yellow) 1-2 Right needle (green) 1-2 Upper looper (blue) 3-5 Lower looper (red) 7-9	Stitch length: 2.5 Cutting width: 2 Differential: N-1.5 (knits) 0.7-N (wovens)
3-Thread narrow seam	1.5 mm right needle	Right needle (green) 3-5 Upper looper (blue) 3-5 Lower looper (red) 3-5	Stitch length: 1-1.8 Cutting width: 1-1.5 Differential: N-0.7 Stitch lever: roll hem
3-Thread roll hem	1.5 mm right needle	Right needle (green) 3-5 Upper looper (blue) 3-5 Lower looper (red) 7-9	Stitch length: 1-1.8 Cutting width: 1-1.5 Differential: N-0.7 Stitch lever: roll hem
2 Thread wrapped overlock (MO-114D)	3-5 mm right needle 5-7 mm left needle	Left needle (yellow) 3-5 Right needle (green) 3-5 Lower looper (red) 2-4	Stitch length: 2.5 Cutting width: 2 Differential: N-1.5 (knits) 0.7-N (wovens) Upper looper converter *
2-Thread Flatlock (MO-114D)	3-5 mm right needle 5-7 mm left needle	Left needle (yellow) 1-2 Right needle (green) 1-2 Lower looper (red) 3-5	Stitch length: min. 2.5 Cutting width:2 Differential: N Upper looper converter *
2-Thread roll hem (MO-114D)	1.5 mm right needle	Right needle (yellow) 3-5 Lower looper (red) 3-5	Stitch length:1-1.8 Cutting width:1-1.5 Differential: N-0.7 Stitch lever: roll hem Upper looper converter *

* Optional for MO-104D

www.sewshop.eu

WARNING **Please refer to the safety instructions!**

Changing the upper knife

The upper knife (moving knife) is made from special hardened material. Should it get damaged, it can be replaced by your local dealer.

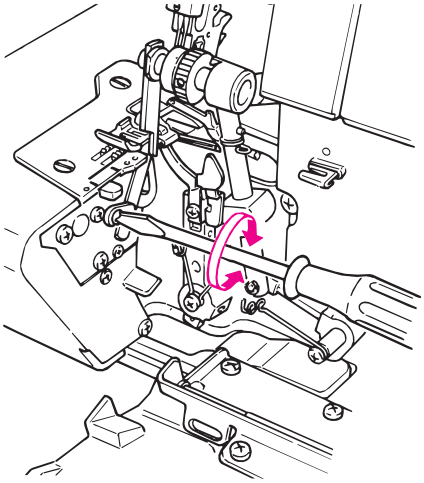

Changing the lower knife

Disconnect machine from electricity supply.

Replacing the knives

Should the knives get damaged, they can be replaced by your local dealer.

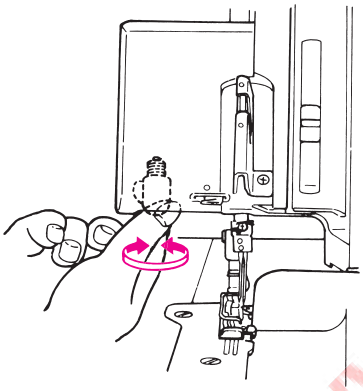

Replacing the bulb

Switch machine off. (Power switch to „0“). Disconnect machine from electricity supply.

Unscrew the bulb and replace it with a new one.

The bulbs are max.15 Watt for 120V machines and max.10 Watt for 220-240V machines. They are available from your local dealer.

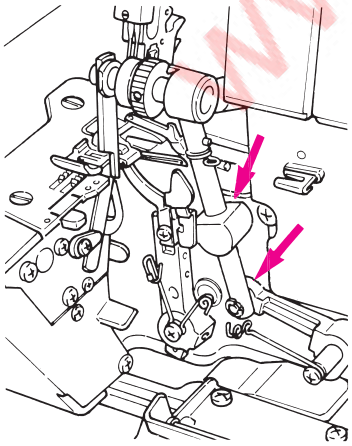

Cleaning and lubricating

Switch the machine off (power switch to “O”). Disconnect machine from electricity supply.

During sewing, dust and fluff collect in and on the machine. This should be removed regularly.

Your overlock machine requires very little lubrication. Now and then, lubricate only the points illustrated. Please refer to safety instructions.

Precautions to be taken when handling oil

* In the event the oil gets in the eye or adheres on skin, immediately wash it off in order to prevent irritation and rash.
* If swallowed accidentally, immediately seek for medical advice in order to prevent diarrhea and vomiting.
* Keep the oil away from children.
* Oil disposal is obliged by legislation. Dispose of the oil properly in compliance with the relevant legislation.

www.sewshop.eu

Trouble shooting

Problem	Cause	Solution	Page
The machine does not sew	• The main switch is not on. • The machine is not plugged in.	• Switch machine on. (power switch to “I”). • Insert plug in main socket.	8 7
Fabric does not feed evenly	• Differential feed is adjusted incorrectly. • Presser foot pressure is too low. • Lower or upper knife is too blunt or wrongly positioned.	• Check the differential feed setting. • Adjust the presser foot pressure. • Replace the upper or lower knife.	21 24 26
Thread breaks	• Thread tension is too tight for the thread being used. • The machine is not threaded correctly. • Needles are inserted incorrectly. • Wrong needles used.	• Reduce thread tension. • Check the threading. • Insert needles fully into needle clamp, with the flat side to the back. • Use the needle system 130/705H.	19 13-17 11 11
Needles break	• Needles are bent or blunt, points are damaged. • Needles are not inserted correctly. • Fabric was pulled while sewing.	• Replace needles. • Insert needles fully into needle clamp, with the flat side to the back. • Guide fabric gently with both hands.	11 11 ---
Skipped stitches	• Needles are bent or blunt. • Wrong needles used. • Presser foot pressure is too low.	• Replace the needles. • Use needle system 130/705H. • Increase presser foot pressure.	11 11 24
Poor stitch formation	• Threads are not correctly between the tension discs. • Thread has got caught. • Machine is threaded incorrectly.	• Check if thread is lying between tension discs. • Raise the presser foot and pull the thread. • Check threading path of each thread. • Check threading path of each thread.	12 9 13-17 13-17
Seams flute or wave, especially when sewing knits	• Fabric was pulled while sewing. • Presser foot pressure is too high. • Differential feed is set incorrectly.	• Guide fabric gently. • Reduce presser foot pressure. • Adjust differential feed to N-2.	-- 24 21
Seams pucker	• Needle thread tension is too high. • Differential feed is set incorrectly.	• Reduce the needle thread tension. • Adjust differential feed to 0.7-N.	19 21
Fabric edges curl	• Too much fabric is in the stitch. • Thread tension is too high. • Stitch selection lever is on roll hem.	• Reduce cutting width. • Reduce thread tension. • Set selection lever to overlock.	20 19 23
Thread loops are too	• Too little fabric in the stitch.	• Increase the cutting width.	20

www.sewshop.eu

Technical data

Stitch choice	2 needles, 2 loopers: 4 thread overlock with integrated safety seam 1 needle, 2 loopers: 3 thread flatlock, narrow seam, roll hem 1 needle, 1 looper: 2 thread overlock, flatlock, roll hem (MO-114D) 2 needles, 1 looper: 3 thread super stretch (MO-114D)	
Needle system	130/705H	
Seam width	MO-114D 3-5 mm (2/3 thread overlock) 5-7 mm (4 thread overlock, 3 thread super stretch)	MO-104D 3-5 mm (3 thread overlock) 5-7 mm (4 thread overlock)
Stitch length	1-4 mm	
Differential feed	No waving or fluting in knits N-2 No puckering 0.7 - N	
Presser foot lift	5 mm	
Handwheel	Rotates forwards	
Sewing speed	Up to 1500 sti/min	
Weight	7 kg	
Dimensions	315(W) × 290(D) × 290(H) mm	
Foot control model nr.	YC-482 (USA and Canada only) YC-483N (220-240V)	

We reserve the right to make changes in the interest of technical progress.

www.sewshop.eu

Optional Accessories

· **Blind stitch presser foot**

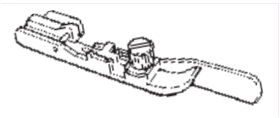

· **Piping presser foot**

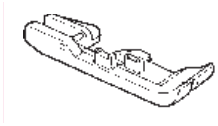

· **Elasticator**

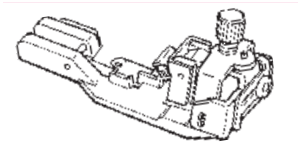

· **Beading presser foot**

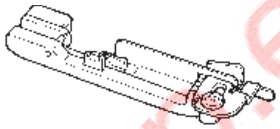

· **Cording presser foot**

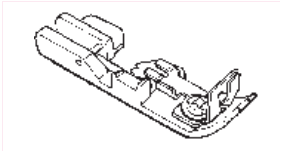

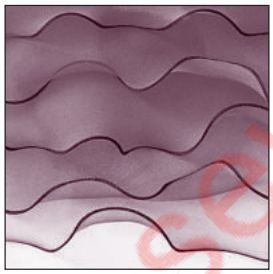

· **Gathering presser foot**

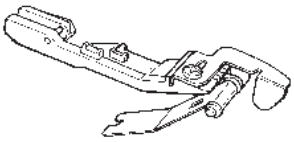

• **Upper looper converter (Optional for MO-104D)**

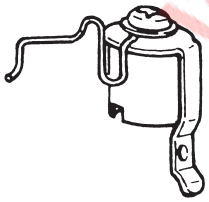

www.sewshop.eu

Contact your local dealer.

www.sewshop.eu

www.sewshop.eu

JUKI CORPORATION
2-11-1, TSURUMAKI, TAMA-SHI,
TOKYO, 206-8551, JAPAN
PHONE : (81)42-357-2341
FAX : (81)42-357-2379

Copyright © 2015 JUKI CORPORATION
All rights reserved throughout the world.

40166075

000715