PFAFF

Perfection starts here.™

quilt expression™ 725

User's Guide

www.sewshop.eu

IMPORTANT SAFETY INSTRUCTIONS

Read all instructions before using this sewing machine.

When using an electrical appliance, basic safety precautions should always be followed, including the following:

Keep the instructions at a suitable place close to the machine. Make sure to hand them over if the machine is given to a third party.

This appliance is intended for use by adults. The appliance can be used with adult supervision by (i) children aged from 8 to 12 years and (ii) persons with reduced physical, sensory or mental capabilities or lack of experience and knowledge if they have been given instruction concerning use of the appliance in a safe way and understand the hazards involved. Cleaning and user maintenance shall not be made by children without supervision. It is not allowed for anyone to play with the machine. Children up to 8 years are not allowed to use the machine.

DANGER - TO REDUCE THE RISK OF ELECTRIC SHOCK:

- A sewing machine should never be left unattended when plugged in. The electrical socket, to which the machine is plugged in should be easily accessible. Always unplug this sewing machine from the electric outlet immediately after using and before cleaning, removing covers, lubricating or when making any other user servicing adjustments mentioned in the instruction manual.

WARNING –TO REDUCE THE RISK OF BURNS, FIRE, ELECTRIC SHOCK, OR INJURY TO PERSON:

- Do not allow to be used as a toy. Close attention is necessary when this sewing machine is used by or near children.
- Use this sewing machine only for its intended use as described in this manual. Use only attachments recommended by the manufacturer as contained in this manual.
- Never operate this sewing machine if it has a damaged cord or plug, if it is not working properly, if it has been dropped or damaged, or dropped into water. Return the sewing machine to the nearest authorized dealer or service center for examination, repair, electrical or mechanical adjustment.
- Never operate the sewing machine with any air openings blocked. Keep ventilation openings of the sewing machine and foot control free from the accumulation of lint, dust, and loose cloth.
- Keep fingers away from all moving parts. Special care is required around the sewing machine needle.
- Always use the proper needle plate. The wrong plate can cause the needle to break.
- Do not use bent needles.
- Do not pull or push fabric while stitching. It may deflect the needle causing it to break.
- Wear safety glasses.
- Switch the sewing machine off (“0”) when making any adjustment in the needle area, such as threading needle, changing needle, threading bobbin, or changing presser foot, etc.
- Never drop or insert any object into any opening.
- Do not use outdoors.
- Do not operate where aerosol (spray) products are being used or where oxygen is being administrated.

www.sewshop.eu

- To disconnect, turn all controls to the off (“0”) position, then remove plug from outlet.
- Do not unplug by pulling on cord. To unplug, grasp the plug, not the cord.
- The foot control is used to operate the machine. Never place other objects on the foot control.
- Do not use the machine if it is wet.
- If the LED lamp is damaged or broken, it must be replaced by the manufacturer or its service agent or a similarly qualified person, in order to avoid a hazard.
- If the cord connected with the foot control is damaged, it must be replaced by the manufacturer or its service agent or a similarly qualified person, in order to avoid a hazard.
- Only use the external power supply (if applicable), the foot controller and cords supplied with your machine. No other can be used. If damaged or lost, make sure to replace with identical parts. Replacement should be carried out by the manufacturer, its service agent or a similarly qualified person, to ensure safety and avoid a hazard.

This product complies with 21 CFR 1040.10 and 1040.11 and IEC 60825-1 Ed. 3.0 as permitted by Laser Notice No. 56.

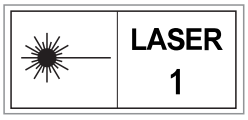

Please Observe the Following Safety Precautions:

- Do not attempt to disassemble or modify the laser system.
- Do not attempt to service the laser system. Refer all servicing to qualified personnel.
- Avoid exposure to internal laser components. The laser is not user-serviceable.

For Overlock Machines only:

- Never operate without a cutter cover or a securely installed coverstitch table.
- **CAUTION** — Your machine has moving parts, to reduce the risk of injury, switch off before doing service or maintenance. Close the cover before operating the machine.

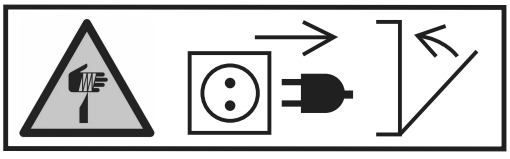

SAVE THESE INSTRUCTIONS

www.sewshop.eu

Federal Communication Commission Interference Statement

For the USA and Canada

Responsible party:	Singer Sourcing Limited LLC 300 2nd Ave. S, Suite 300, Nashville, TN 37201, USA
Product name:	PFAFF® Quilt Expression™ 725 sewing machine

This device complies with Part 15 of the FCC Rules. Operation is subject to the following two conditions: (1) This device may not cause harmful interference, and (2) this device must accept any interference received, including interference that may cause undesired operation.

To satisfy radio frequency exposure requirements, a separation distance of 8″ (20 cm) or more should be maintained between this device and persons during device operation. To ensure compliance, operations at closer than this distance is not recommended. The built-in antenna used for this transmitter must not be co-located in conjunction with any other antenna or transmitter.

This equipment has been tested and found to comply with the limits for a Class B digital device, pursuant to Part 15 of the FCC Rules. These limits are designed to provide reasonable protection against harmful interference in a residential installation. This equipment generates, uses and can radiate radio frequency energy and, if not installed and used in accordance with the instructions, may cause harmful interference to radio communications. However, there is no guarantee that interference will not occur in a particular installation. If this equipment does cause harmful interference to radio or television reception, which can be determined by turning the equipment off and on, the user is encouraged to try to correct the interference by one of the following measures:

- Reorient or relocate the receiving antenna.
- Increase the separation between the equipment and receiver.
- Connect the equipment into an outlet on a circuit different from that to which the receiver is connected.
- Consult the authorized PFAFF® retailer or an experienced radio/TV technician for help.

The included interface cable should be used in order to ensure compliance with the limits for a Class B digital device.

⚠ *Any changes or modifications not expressly approved by the party responsible for compliance could void the user's authority to operate this equipment.*

www.sewshop.eu

CE Declaration of Conformity

VSM Group AB Soldattorpsgatan 3, SE-554 74 Jonkoping, Sweden declare that the product:

Household Sewing Machine PFAFF® Quilt Expression™ 725 complies fully with following EU directives:

- 2014/53/EU RED Directive

and that the relevant harmonized standards are applied as listed:

- EN 60335-1:2012, A13:2017, A1:2019, A2:2019, A14:2019, A15:2021, A16:2024
- EN 60335-2-28:2003, A1:2008, A11:2018
- EN 62233:2008
- EN 62311:2020
- EN 50564:2011
- EN 50014-1:2021
- EN 55014-2:2021
- EN 61000-3-2:2019, A1:2021
- EN 61000-3-3:2019, A1:2019
- EN 63000:2018
- EN 301 489–17 V3.24–2020
- EN 301 489-v2.1.1-2017
- EN 300 328 v2.2.2–2019
- EN 18031-1:2024
- EN 18031-2:2024

Jönköping, June 1, 2025

Carsten Raunsgaard

Sr. Manager Regulatory Compliance

www.sewshop.eu

TABLE OF CONTENTS

1 Introduction 1
Machine Overview 2
Front 2
Needle Area 3
Right Side 3
Rear 3
Top 4
Accessory Tray 4
Storing a Needle Plate 5
Function Buttons 6
Needle Stop Up/Down 6
Presser Foot Up and Extra Lift 6
Presser Foot Down and Pivot 6
Cut Function 6
Immediate Tie-Off 6
Stitch Re-Start 6
Stop 7
Start/Stop 7
Reverse 7
Accessories 8
Included Accessories 8
Presser Feet 9
Stitch Overview 11
Utility Stitches 11
Stitch Menu Overview 14
Alphabets 14

2 Preparations 15
Unpacking Machine 16
Connect the Power Cord and Foot Control 16
Pack Away After Sewing 17
USB Ports 17
Using a USB device 17
LED Lights 17
Free Arm 17
Manual Thread Cutter 18
Thread Sensor 18
Knee-Lift 18
Speed Control Slider 18
Spool Pins 19
Horizontal Position 19
Vertical Position 19
Auxiliary Spool Pin 19
Bobbin Spool Pin 20
Spool Caps 20
Threads 20
Needles 22
Important Needle Information 22
Changing the Needle 23
Threading 24
Threading the Upper Thread 24
Automatic Needle Threader 25
Threading for Twin Needle 27
Threading Tips and Hints 27
Bobbin Winding 29
Winding Through the Needle 30
Inserting the Bobbin 31
IDT™ System (Integrated Dual Feed) 32
Engaging the IDT™ System 32
Disengaging the IDT™ System 32
Changing the Presser Foot 32
Remove Presser Foot 32
Attach Presser Foot 32
Attaching the Sensormatic Buttonhole Foot 33
Changing to Straight Stitch Plate 33
Getting Started with WiFi and CREATIVATE™ 34

3 The Multi-Touch Screen 35
Main Functions 36
Home 36
CREATIVATE™ Services 36
Learning Center 36
User's Guide 36
Save 36
Quick Help 36
Common Functions 36
Top Bar 38
Secondary Top Bar 38
Recommendations 38
Information 38
Active Features 38

4 WiFi & CREATIVATE™ Services 39
WiFi Introduction 40
Getting Started With WiFi 40
Firmware Updates 40
Firmware Update Using WiFi 40
Firmware Update Using a USB Device 41
CREATIVATE Services 41
CREATIVATE 41
CREATIVATE Blog 41
CREATIVATE App 41

5 Home Screen 43
Home Screen — Overview 44
Edit Machine Nickname 44
User Profile 45
Sewing — Start New Session 45
Continue from Saved State 45
CREATIVATE 45
User's Guide 45
Learning Center 46
Sewing 46
Quilting 46
Get Started 47
Advanced Features 47
Accessories 47

www.sewshop.eu

Needles ... 47
Stabilizers ... 47
Project Viewer ... 48

6 Sewing ... 49
Sewing Mode – Overview ... 50
Load a Stitch ... 51
Information and Sewing Recommendations ... 51
Laser Setup ... 51
Stitch Settings ... 52
Stitch Width ... 52
Stitch Positioning ... 52
Stitch Length ... 52
Stitch Density ... 53
Mirroring ... 53
Buttonhole Slit Length ... 53
Button Stitch Repetition ... 53
Thread Tension ... 53
Presser Foot Pressure ... 53
Balance ... 54
Free Motion Options ... 54
Tie-Off Options ... 55
Save Stitch ... 55
Sewing Programs ... 56
Stitch Repeat ... 56
Sewing Techniques ... 57
Seam ... 57
Overcast ... 57
Seam and Overcast ... 57
Baste ... 57
Blind Hem ... 58
Hem ... 58
Buttonholes ... 58
Programmable Button Sew On ... 59
Tapering Stitches ... 60
4-Way Stitches ... 60
Special Stitches For Optional Presser Feet ... 60
Exclusive Sewing Techniques ... 60
Ribbon Stitches ... 60
Stacking Stitches ... 60
Floating Stitches ... 61
Radiant Stitches ... 61
Lace Edge Stitches ... 61
Pop-up Messages in Sewing ... 62

7 Stitch Creator™ Feature ... 63
Stitch Creator™ Feature – Overview ... 64
Getting Started with Stitch Creator™ ... 65
Definition of a Stitch Point ... 65
Select Stitches/Stitch Points ... 65
Preview ... 65
Edit Stitch in Stitch Creator™ ... 66
Zoom Options ... 66
Move ... 66
Duplicate Selected Stitch Point ... 66
Delete Selected Stitch Point ... 66
Mirroring ... 66
Triple Stitch ... 66
Add a Stitch or Stitch Point ... 67
Pop-up Messages in Stitch Creator™ Feature ... 67

8 Sequence ... 69
Sequence – Overview ... 70
Getting Started with Sequence ... 71
Directional Stitches ... 71
Edit and Adjust Your Sequence ... 71
Sequence Commands ... 72
Saving a Sequence ... 73
Sew Your Sequence ... 73
Adjust the Entire Sequence ... 73
Using Sequence in Sewing Mode ... 73
Pop-up Messages in Sequence ... 73

9 Settings ... 75
Sewing Settings ... 76
Automatic Presser Foot Lift ... 76
Automatic Thread Cutter ... 76
Stitch Limiting Options ... 76
Needle Stop Position ... 76
Presser Foot Pressure ... 76
Options for Feed Teeth ... 77
Tie-Off Options ... 77
Camera & Laser Settings ... 77
Presser Foot Recognition ... 77
Fine Tune Camera ... 77
Fine Tune Camera ... 77
Display & Audio Settings ... 78
Language ... 78
Time Format ... 78
Time Zone ... 78
Timer Functions ... 78
Machine Usage ... 78
Auto Power Off ... 78
Audio Volume ... 78
Audio Repeat ... 78
LED Work Light ... 79
Units ... 79
Personalize Settings ... 79
Machine Nickname ... 79
User Name ... 79
Color Themes ... 79
Bottom Bar Text ... 79
Customize Your Workspace ... 79
Lock Screen ... 79
Always Show Timer in Top Bar ... 79
WiFi Settings ... 80
CREATIVATE Settings ... 80
Machine Information ... 81

10 File Manager ... 83
File Manager – Overview ... 84
File Formats ... 84

www.sewshop.eu

Browse File Manager 84
Open a File or Folder 85
Select Multiple 85
Vault Folder 85
USB Device.....85
List/Thumbnail View 85
Move up One Folder Level 85
Organize.....85
Create New Folder..... 86
Rename a File or Folder 86
Move a File or Folder 86
Copy a File or Folder 86
Delete a File or Folder 86
Pop-up Messages in File Manager.....87

11 Maintenance 89
Cleaning the Machine Exterior 90
Removing the Needle Plate and Cleaning the Bobbin Area 90
Cleaning Under the Bobbin Area 90
Replacing the Needle Plate 90
Troubleshooting.....91
Troubleshooting Connectivity 93
Service 93
Non-Original Parts and Accessories..... 94
Technical specification.....94

www.sewshop.eu

www.sewshop.eu

Introduction

Machine Overview

Front

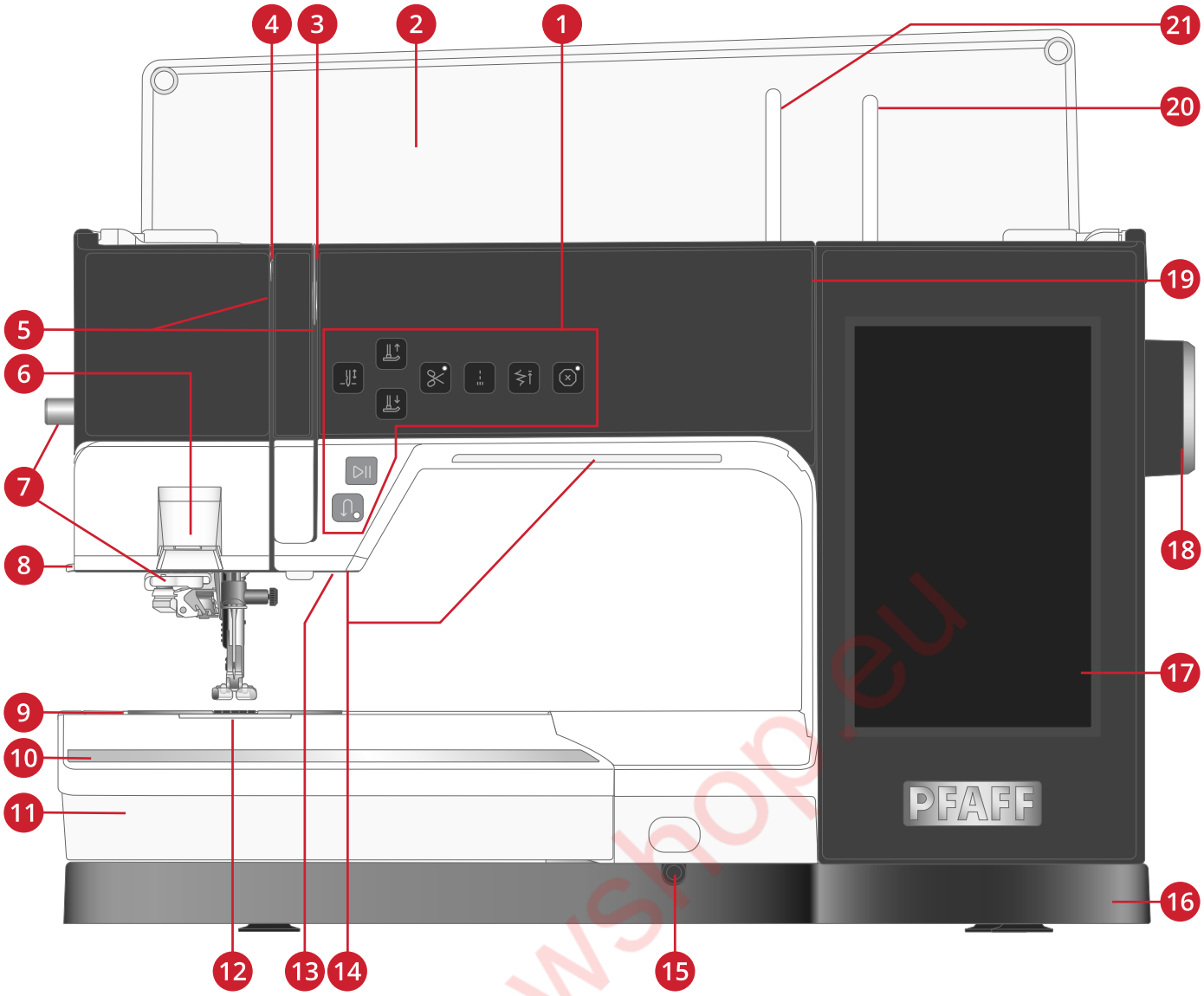

1. Function buttons, see page 6 for detailed description
2. Lid and stitch overview
3. Thread tension discs
4. Thread take-up lever
5. Threading slots
6. Laser
7. Automatic needle threader
8. Thread cutter
9. Needle plate
10. Ruler
11. Accessory box
12. Bobbin cover
13. Camera, used for presser foot recognition
14. LED lights
15. Knee lifter socket
16. Base plate
17. Multi-touch screen
18. Hand wheel
19. Bobbin winding thread guides
20. Auxiliary spool pin
21. Main spool pin

www.sewshop.eu

Needle Area

1. Automatic needle threader
2. Needle bar with needle clamp screw
3. Needle thread guide
4. IDT™ System
5. Presser foot
6. Presser foot ankle
7. Presser foot bar

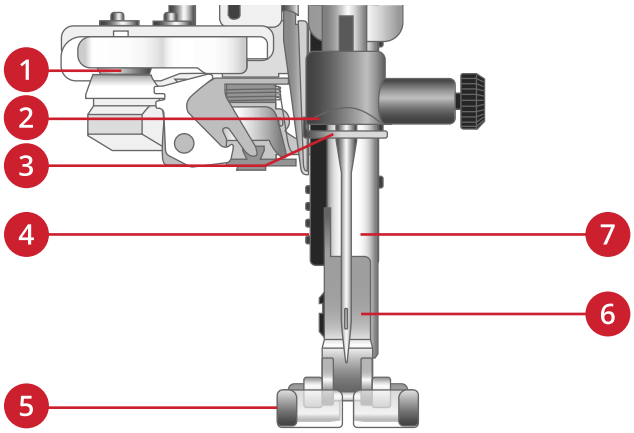

Right Side

1. Handwheel
2. Speaker
3. Speed control slider
4. ON/OFF switch, sockets for power cord and foot control. See Connect the Power Cord and Foot Control, page 16.
5. Built-in USB port

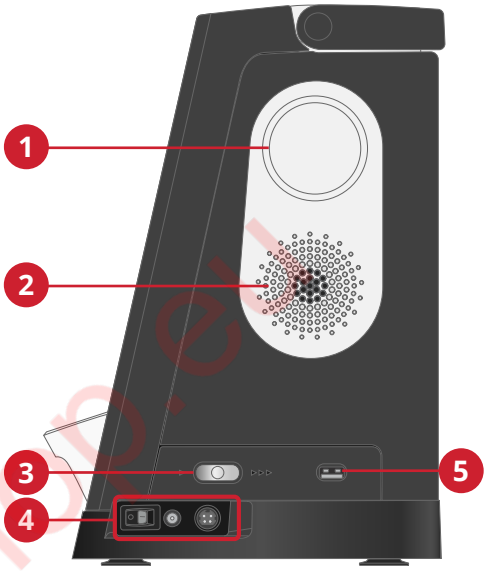

Rear

1. Handle
2. Accessory socket
3. Free arm

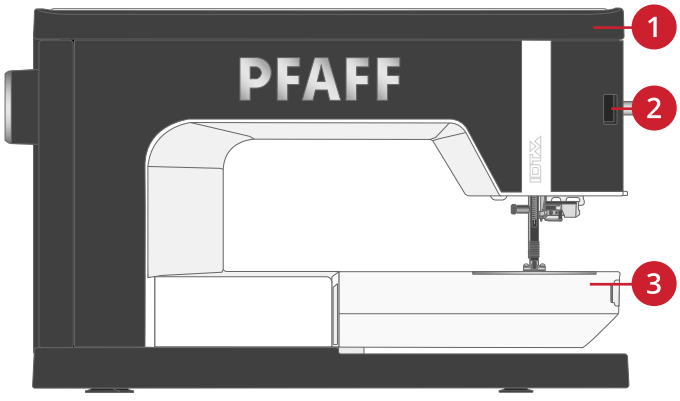

www.sewshop.eu

Top

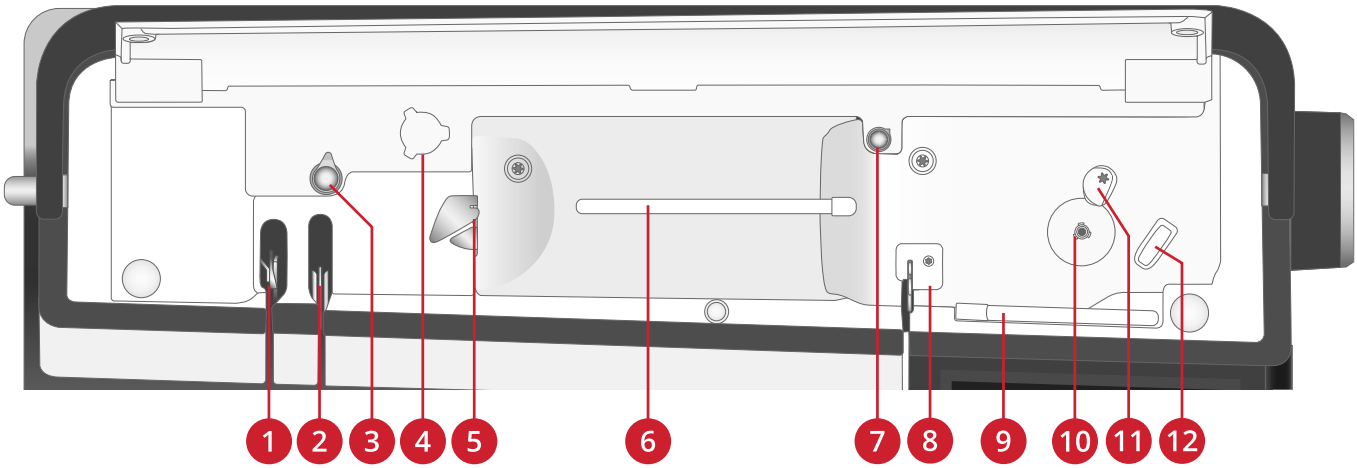

1. Thread take-up lever
2. Thread tension discs
3. Pre-tension disc
4. Hole for bobbin spool pin
5. Thread guide
6. Main spool pin
7. Bobbin winding tension disc
8. Thread guide
9. Auxiliary spool pin
10. Bobbin winder
11. Bobbin winder lever
12. Thread cutter

Accessory Tray

The accessory tray features special compartments for presser feet and bobbins, plus space for needles and other accessories. Store the accessories in the tray so they are easily accessible.

1. Space for accessories
2. Spaces for bobbins
3. Spaces for presser feet
4. Space with hole for 5M Manual Buttonhole Foot
5. Space for needle plate

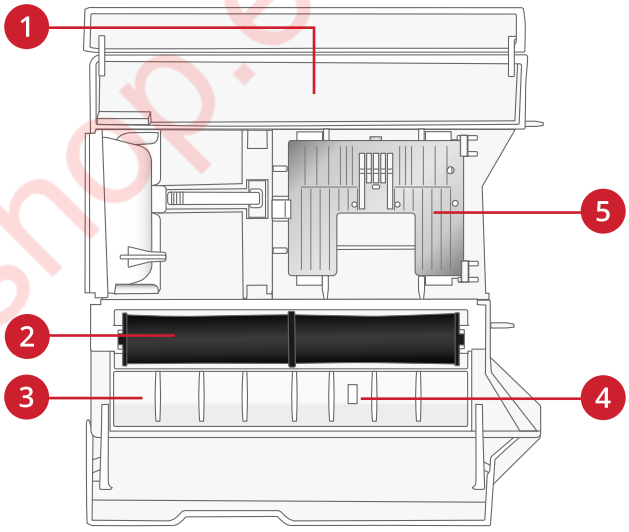

www.sewshop.eu

Storing a Needle Plate

Store the needle plate not in use in the bottom of your accessory tray.

- Insert the right side of the plate into spring on the right side (A), push it slightly. Lay it down so that the needle plate snaps into place (B).
- To remove the plate, push the needle plate to the left and then upwards.

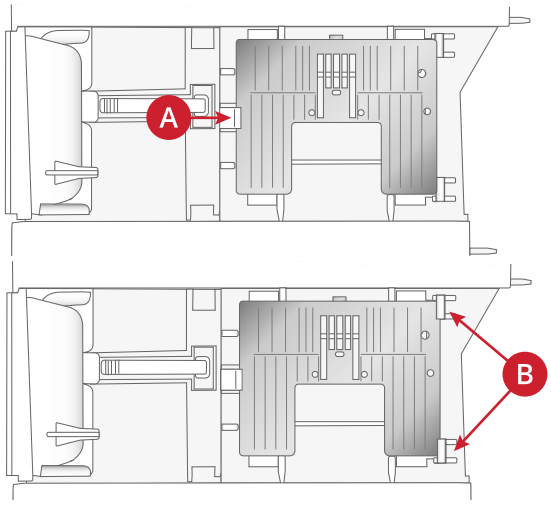

www.sewshop.eu

Function Buttons

1. Needle stop up/down
2. Presser foot up and extra lift
3. Presser foot down and pivot
4. Cut function
5. Immediate tie-off
6. Stitch restart
7. Stop
8. Start/stop
9. Reverse

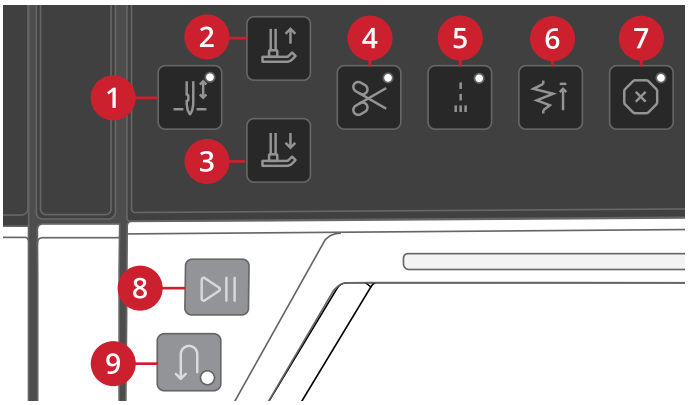

Needle Stop Up/Down

Touch needle stop up/down to set the position of the needle when you stop sewing. The needle will move up or down when you touch the button. The indicator light intensifies when needle stop down is set.

Tip: You can also tap the foot control to raise or lower the needle once you stop sewing. Tapping the foot control does not change the set stop position.

Presser Foot Up and Extra Lift

Touch the presser foot up button once to raise the presser foot. Touch again and the presser foot will raise to extra lift position, and the feed teeth will be automatically lowered to make it easier to get heavy fabric under the presser foot.

Presser Foot Down and Pivot

The presser foot is lowered automatically when you start sewing. To lower the presser foot before starting to sew, touch the presser foot down and pivot button. The presser foot will be completely lowered and the machine firmly holds the fabric. Touch presser foot down again to go to pivot position.

Cut Function

Touch the cut function button and your machine cuts the upper and bobbin threads and raises the presser foot and needle.

To cut threads at the end of a stitch or stitch sequence, touch the cut function button while sewing. The indicator light will illuminate, alerting you that a cut is requested. When the stitch or stitch sequence is completed, your machine cuts the upper and bobbin threads and raises the presser foot and needle.

Note: If automatic presser foot lift has been deselected in sewing settings the presser foot will not be raised when using the cut function.

Note: Some optional accessories are attached in the two small circular holes in the needle plate just above the bobbin cover. Do not use the cut function when an accessory is attached in these holes as that may interfere with the automatic thread cutter located under the needle plate

Immediate Tie-Off

Press immediate tie-off while sewing and your machine sews a few tie-off stitches and stops automatically. By touching the tie-off button once more while the action indicator is lit, the function can be turned off.

Stitch Re-Start

When you stop sewing in the middle of a stitch, touch stitch re-start to begin sewing at the beginning of the stitch. The stitch or stitch sequence will remember any special settings you made.

www.sewshop.eu

Stop

Touch STOP when sewing to conclude a stitch or stitch program. Your machine fixes the thread and stops automatically when the stitch or stitch program has been completed. Touch STOP before starting to sew and your machine sews only one repetition of the stitch. Only one stitch is displayed on the screen. The indicator next to the STOP button is lit when the STOP function is active. To cancel the function, touch STOP again or select a new stitch. The STOP function is cancelled when the stitch is completed.

Start/Stop

Touch the start/stop button to start and stop the machine without using the foot control. Touch start/stop to begin and touch again to stop.

Reverse

When reverse is active, the reverse indicator illuminates. For permanent reverse, touch the reverse button once before starting to sew. The reverse indicator will illuminate and the machine sews in reverse until you touch the button again to cancel. If you press the reverse button while sewing, the machine will sew in reverse for as long as you keep the button pressed.

Reverse is also used when sewing manual buttonholes, darning stitches and tapering stitches to step between the parts of the stitch.

www.sewshop.eu

Accessories

Included Accessories

1. Thread net (2)
2. Screwdriver
3. Seam ripper
4. Brush
5. Felt Pad (2)
6. Multipurpose tool/Button reed
7. Bobbins (5)
8. Bobbin spool pin
9. Knee lift
10. Spool cap, small
11. Spool cap, medium
12. Spool cap, large (2)
13. Edge/Quilting guide (used attached to presser foot ankle)
14. Straight stitch plate

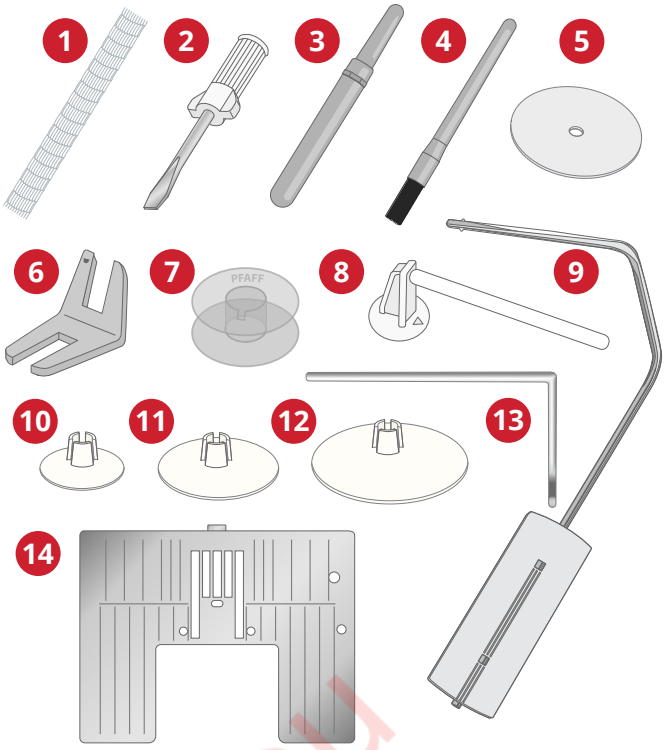

Included Accessories Not in Picture

- Cover for machine
- Foot control
- Power cord
- Needles

www.sewshop.eu

Presser Feet

Note: For the best sewing results, use only presser feet designed for and compatible with your Quilt Expression™ 725 machine.

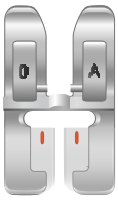

0A -Standard Presser Foot for IDT™ System

(attached on the machine upon delivery)

This foot is used mainly for straight stitching and zigzag stitching with a stitch length longer than 1.0 mm.

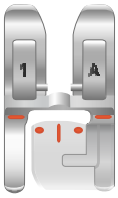

1A - Fancy Stitch Foot for IDT™ System

This foot is used for decorative stitches. The groove on the underside of the foot is designed to flow smoothly over the stitches.

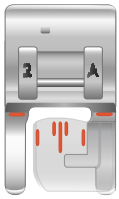

2A - Fancy Stitch Foot

When sewing decorative stitches or short zigzag stitches and other utility stitches with less than 1.0mm stitch length, use this foot. The groove on the underside of the foot is designed to flow smoothly over the stitches.

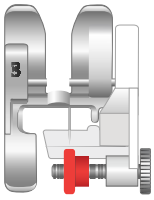

3 – Blindhem Foot for IDT™ System

This foot is used for blindhem stitches. The toe on the foot guides the fabric. The red guide on the foot is designed to ride along the fold of the hem edge.

4 – Zipper Foot for IDT™ System

This foot can be snapped on either the right or the left of the needle, making it easy to sew close to both sides of the zipper teeth. Move needle position to right or left to sew closer to zipper teeth.

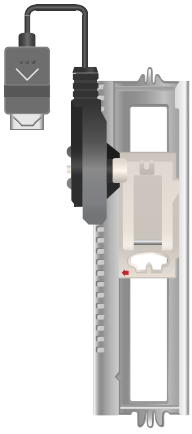

5A – Sensormatic Buttonhole Foot

When connected to the machine, the buttonhole is sewn in the length that has been entered into the machine.

5M - Manual Buttonhole Foot

This foot is used for sewing manual buttonholes. Use the markings on the foot to position the garment edge. The finger on the back of the foot holds cording for corded buttonhole.

www.sewshop.eu

6A – Embroidery/Sensormatic Free-Motion Foot

This foot is used for embroidery and Free-Motion sewing. This foot can also be used for darning.

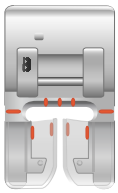

8 – Maxi Stitch Foot

This foot is used for side-motion stitches.

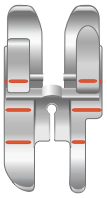

¼″ Quilting Foot for IDT™ System

This foot is perfect for piecing and patchwork, especially when used in conjunction with the straight stitch needle plate. The distance from the needle to the outer edge of the right toe is ¼″ (6mm). The distance from the needle to the inner edge of the right toe is ⅛″ (3mm).

www.sewshop.eu

Stitch Overview

Utility Stitches

Stitch	№	Name	Description
	1.1.1	Straight stitch	For seaming and topstitching.
	1.1.2	Stretch triple straight stitch	For reinforced seams and for top stitching.
	1.1.3	Stretch tricot stitch	For sewing seams on stretch fabrics.
	1.1.4	Straight stitch reverse	For sewing continuous reverse.
	1.1.5	Basting stitch	For all types of sewing.
	1.1.6	Zigzag stitch	For reinforcing seams, clean finish and stretch sewing.
	1.1.7	Stretch triple zigzag stitch	Elastic stitch for decorative hems or topstitching.
	1.1.8	Three-step zigzag stitch	For stretch sewing, darning, patching, edge finishing and decorative sewing.
	1.1.9	Elastic stitch	For stretch sewing, darning, patching and lace insertion.
	1.1.10	Triple stretch stitch	For stretch sewing, darning, patching, edge finishing and decorative sewing.
	1.1.11	Z-zigzag stitch	For sewing appliqué.
	1.1.12	Honeycomb stitch	Decorative stitch for stretch fabrics and hems. Also used with elastic thread in the bobbin.
	1.1.13	Bridging stitch	Joining fabrics and quilt batting, decorative stitch for quilting, hemstitching.
	1.1.14	Foundation elastic stitch	Joining stitch for undergarments, terry cloth, leather, bulky fabrics where overlapping the seams.
	1.1.15	Crosshem stitch	Elastic decorative hem for stretch fabrics. Also suitable for joining fabrics and quilt batting.
	1.1.16	Blind hem stitch	For sewing blind hems on woven fabrics.
	1.1.17	Elastic blind hem stitch	For sewing blind hems on stretch fabrics.
	1.2.1	Closed overlock	For sewing seams and overcasting stretch fabrics in one step.
	1.2.2	Closed overlock	For sewing seams and overcasting stretch fabrics in one step.
	1.2.3	Closed overlock	For sewing seams and overcasting stretch fabrics in one step with reinforced edge.
	1.2.4	Elastic overcast	For sewing seams and overcasting stretch fabrics in one step.
	1.2.5	Standard overcast	For sewing seams and overcasting stretch fabrics in one step with reinforced edge.

www.sewshop.eu

Stitch	№	Name	Description
	1.2.6	Overlock	For sewing seams and overcasting stretch fabrics in one step.
	1.2.7	Light knit fabric patching	For patching and sewing hems in stretch fabrics.
	1.2.8	Closed overlock	For patching, sewing hems, sewing seams and overcasting.
	1.2.9	Closed overlock for stretch	For patching, sewing hems, sewing seams and overcasting in stretch fabrics.
	1.2.10	Stretch knit overlock	For sewing seams and overcasting stretch fabrics in one step.
	1.2.11	Finishing edge overlock	For sewing seams and overcasting stretch fabrics in one step with reinforced edge.
	1.2.12	Overlock	For sewing seams and overcasting stretch fabrics in one step.
	1.2.13	Mock cover hem	Create the look of a serger cover hem for stretch fabrics.
	1.2.14	Mock cover hem	Create the look of a serger cover hem for stretch fabrics.
	1.2.15	Open overlock blind hem	Create decorative overlock blind hem for woven fabrics.
	1.2.16	Closed overlock blind hem	Create decorative overlock blind hem for stretch fabrics.
	1.3.1	Linen buttonhole	Buttonhole for blouses, shirts and linen.
	1.3.2	Standard buttonhole	Basic buttonhole for blouses, shirts and jackets. Also for pillowcases.
	1.3.3	Rounded buttonhole with pointed tack	Buttonhole for garments.
	1.3.4	Rounded buttonhole with lengthwise tack	Buttonhole for garments.
	1.3.5	Rounded buttonhole with crosswise tack	Buttonhole for garments.
	1.3.6	Eyelet buttonhole with pointed tack	Tailors buttonhole or decorative buttonhole.
	1.3.7	Eyelet buttonhole with lengthwise tack	Tailors buttonhole for jackets and trousers.
	1.3.8	Rounded buttonhole	Buttonhole for light garments or jackets.
	1.3.9	Stretch buttonhole	Buttonhole for stretch fabrics.
	1.3.10	Decorative buttonhole	Decorative buttonhole.
	1.3.11	Professional eyelet buttonhole	Professional tailors buttonhole for jackets and trousers.
	1.3.12	Decorative eyelet buttonhole	Decorative buttonhole for jackets.
	1.3.13	Decorative eyelet buttonhole	Decorative buttonhole for jackets.

www.sewshop.eu

Stitch	№	Name	Description
	1.3.14	Decorative eyelet buttonhole	Decorative heirloom buttonhole.
	1.3.15	Decorative round buttonhole	Decorative heirloom buttonhole.
	1.3.16	Decorative round buttonhole with pointed tack	Decorative heirloom buttonhole.
	1.3.17	Button sewing	For sewing on buttons or tacking.
	1.3.18	Bound buttonhole	Foundation stitch for bound buttonhole.
	1.4.1	Eyelet	For belts, laces, heirloom sewing, etc.
	1.4.2	Decorative Eyelet	For belts, laces, heirloom sewing, etc.
	1.4.3	Decorative Eyelet	For belts, laces, heirloom sewing, etc.
	1.4.4	Decorative Eyelet	For belts, laces, heirloom sewing, etc.
	1.4.5	Decorative Eyelet	For belts, laces, heirloom sewing, etc.
	1.4.6	Programmable darning stitch	To darn or mend small holes, begin stitching over hole, touch reverse for continuous darning and stop.
	1.4.7	Programmable reinforced darning stitch	Darn and mend work clothes, jeans, table cloths and linen towels. Stitch over hole, touch reverse for continuous darning and auto stop.
	1.4.8	Bartack	Reinforce pockets, shirt openings, belt loops as well as at lower end of a zipper.
	1.4.9	Denim bartack	Reinforce pockets, shirt openings, belt loops as well as at lower end of a zipper.
	1.4.10	Decorative bartack	Reinforce pockets, shirt openings, belt loops as well as at lower end of a zipper.
	1.4.11	Cross bartack	Reinforce pockets, shirt openings and belt loops.
	1.4.12	Decorative bartack	Decorative topper for seams and pockets.
	1.4.13	Decorative bartack	Decorative topper for seams and pockets.

www.sewshop.eu

Stitch Menu Overview

There are several different stitch menus with stitches for all purposes. For detailed description of a stitch, use the quick help function, see page 36.

Stitch Menu Name	Sub Menus
1 — Utility Stitches See also stitch table for detailed descriptions.	1. Essential stitches 2. Overcast stitches 3. Buttonholes 4. Eyelets and darning stitches
2 — Quilt Stitches	1. Handlook quilt stitches 2. Stippling stitches 3. Crazy patch stitches
3 — Needle Art Stitches	1. Cross stitches 2. Needlework stitches 3. Antique hand embroidery stitches 4. Maxi hand embroidery stitches
4 — Satin Stitches	1. Scallop edges 2. Satin elements 3. Borders
5 — Decorative Stitches	1. Leaves and flowers 2. Art stitches 3. Ornamental stitches 4. Maxi art stitches
6 — Miscellaneous Stitches	1. Bows and hearts 2. Animals 3. Fun stitches
7 — Monogram Stitches	1. Monogram 1 2. Monogram 2
8 — Stitch Techniques	1. Single ribbon stitches 2. Double ribbon stitches 3. Triple ribbon stitches 4. Stacking stitches 5. Floating stitches 6. Radiant stitches 7. Lace edge stitches
9 — Additional Stitches	1. Optional feet stitches 2. Four direction stitches

Alphabets

Stitch fonts are available in block, comic, Cyrillic, grand, outline and script alphabets.

www.sewshop.eu

www.sewshop.eu

Preparations

Unpacking Machine

After lifting the machine out of the box and removing all packing material and the plastic bag, wipe the machine, particularly around the needle and needle plate to remove any oil before sewing.

Note: Your Quilt Expression™ 725 machine is adjusted to provide the best stitch result at normal room temperature. Extreme hot and cold temperatures can affect the sewn results.

Connect the Power Cord and Foot Control

Among the accessories you will find the power cord and the foot control.

The power supply unit used for your machine differs between countries. Below both versions are described.

Use the description suitable for the power supply unit delivered with your machine.

Note: Before plugging in the foot control, check to ensure that it is type "FR5" (see underside of foot control).

Note: Only use the power cord supplied with your machine. No other cord can be used. If the cord is damaged or lost, make sure to replace it with the same type of cord, available at an authorized PFAFF® dealer.

Power Supply Type #1

The power cord has a power supply unit (PSU) (A). The fixed cord (B) attached to the PSU unit, should be connected to the sewing machine. The loose cord (C) should be connected to the socket (D) in the PSU unit and then to the wall socket.

Connect the cord (B) to the rear socket (1) on the bottom right side of the machine. Plug the power cord into the wall socket.

Power Supply Type #2

Before using the machine for the first time an AC-plug must be mounted to the power supply unit in order to plug it into an electrical outlet. Slide on the correct AC-plug until it clicks in place. Make sure the plug is firmly attached.

Connect the cord (B) to the rear socket (1) on the bottom right side of the machine. Plug the power cord into the wall socket.

Foot Control and Power

Pull out the cord (E) from the foot control. Connect the foot control cord to the socket (2) on the bottom right side of the machine.

Press the ON/OFF switch (3) to "I" to turn on power and light.

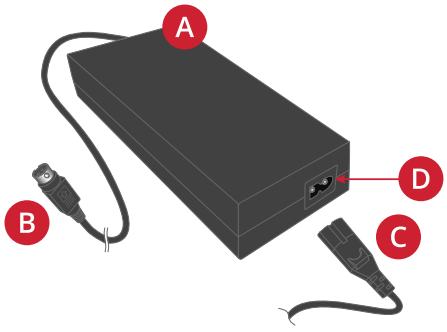

Power Supply Type #1

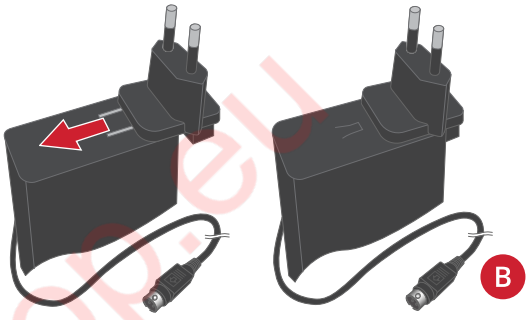

Power Supply Type #2

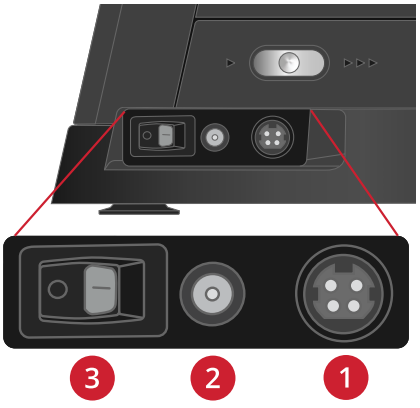

www.sewshop.eu

Pack Away After Sewing

1. Press the ON/OFF switch to "O".
2. Unplug the cord from the wall socket and then from the machine.

   WARNING: If your machine uses power supply type #2, do not pull the cord to remove it, it might damage the cord. Unplug according instructions below.

   Pinch the connector body (the part that can be moved back and forth) as illustrated and pull it outward. While holding it in this position, remove the power cord connector from the socket.

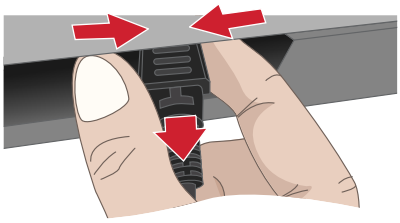

3. Unplug the foot control cord from the machine. Pull the cord gently and release. The cord will retract into the foot control.
4. Place all accessories in the accessory tray. Slide the tray on to the machine around the free arm.
5. Place the foot control in the space above the free arm.
6. Put on the soft cover.

USB Ports

Your machine has a USB port for connecting USB devices such as a memory stick. USB plugs can only be inserted one way – do not force them into the ports! To remove, carefully pull the USB device out straight.

Note: Make sure that the USB stick you use has the format FAT32.

Using a USB device

The external device button in file manager is only active when a device is connected to a machine USB port.

Note: Do not remove the USB device if a loading spinner is shown on the screen or while the file manager is shown. Removing the device at that time can damage the files on your USB device.

LED Lights

Your machine has LED lights which distribute the light evenly over the sewing area and eliminate shadows. You can adjust the brightness of the light in the settings menu.

Free Arm

To use the free arm, slide off the accessory tray. When attached, a hook keeps the accessory tray locked to the machine. Remove the tray by sliding it to the left.

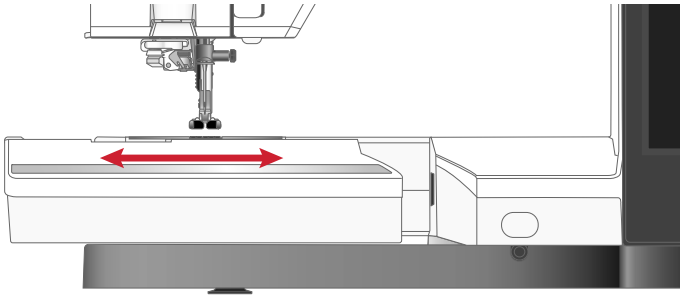

www.sewshop.eu

Manual Thread Cutter

There are three manual thread cutters on your machine.

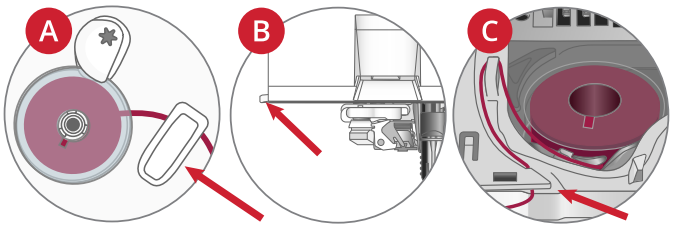

- The first one (A) is close to the bobbin winder spindle for cutting the thread before and after winding.
- The second one (B) is on the left side of the machine for manually cutting top and bobbin thread. Bring both threads into the cutter from the back to the front and pull towards you to cut the threads.
- The third one (C) is next to the bobbin area for cutting the bobbin thread after placing the bobbin in the machine.

Thread Sensor

If bobbin thread is running low: You can continue sewing without closing the pop-up before the bobbin thread runs out completely. This gives you an opportunity to plan where to stop and change the bobbin. When the bobbin is replaced with a full one, touch OK in the pop-up.

Knee-Lift

Your machine comes with an electronic knee-lifter that allows you to lift the presser foot with your knee. The knee-lifter is very helpful when sewing, since it allows you to handle the fabric with your hands while your knee lifts the presser foot to the desired height.

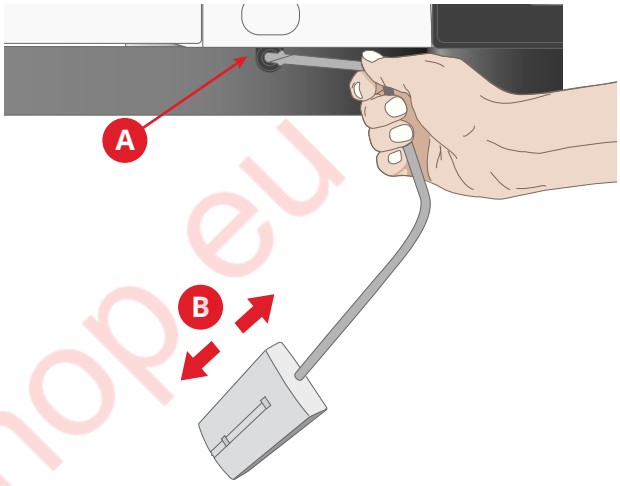

Match the ribs on your knee-lifter with the notches in the knee-lifter socket (A). Carefully push the knee-lifter into the socket. Adjust the rectangular bar on the knee-lift until it is positioned at a comfortable height for you (B).

Press your knee towards the knee-lifter and to the right, and the presser foot will raise. You can raise the presser foot to three positions with your knee-lifter; pivot height, up, and extra lift position.

When moving the presser foot to the extra lift position, the machine drops the feed teeth, allowing you to easily place thick fabrics underneath the presser foot. The feed teeth will raise automatically when you start to sew.

To remove the knee-lift, just pull it straight out of the socket.

Speed Control Slider

The speed control slider sets the sewing speed. To increase sewing speed, slide the slider backwards, to decrease sewing speed, slide the slider towards you.

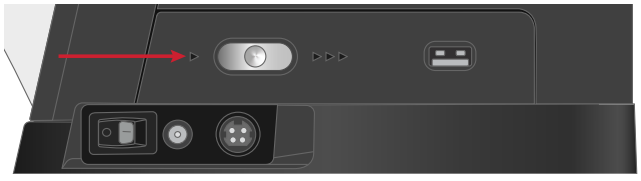

A pop-up appears on screen when adjusting the slider, indicating which speed level is set. The speed setting is also shown in the information area.

www.sewshop.eu

Spool Pins

Your machine has three spool pins; a main spool pin, an auxiliary spool pin and a bobbin spool pin. The spool pins are designed for all types of thread. The main spool pin is adjustable and can be used in a horizontal position (the thread reels off the stationary spool) or in a vertical position (the thread spool rotates). Use the horizontal position for all regular sewing threads and the vertical position for large spools or specialty threads.

Use the main spool pin (A) when threading the upper thread and for bobbin winding through the needle.

Use the auxiliary spool pin (B) for a second spool when sewing with a twin needle.

The bobbin spool pin is recommended to use when winding the bobbin.

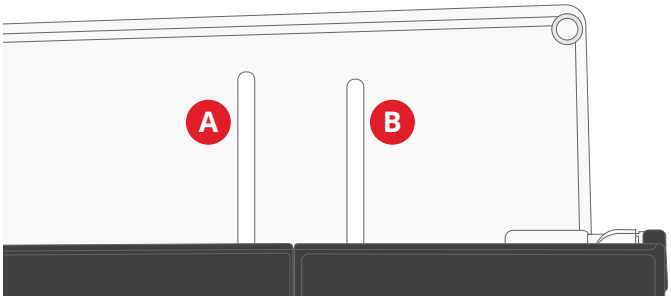

Main spool pin (A) and auxiliary spool pin (B)

Horizontal Position

Lift the spool pin up slightly from its horizontal position to easily place the thread spool on the pin. The thread should reel over the top, in a counterclockwise direction, as shown in the picture. Slide on a spool cap and then move the spool pin back to the horizontal position.

Use a spool cap slightly larger than the thread spool. For narrow thread spools, use a smaller spool cap in front of the spool (A). For large thread spools, use a larger spool cap in front of the spool (B).

The flat side of the spool cap should be pressed firmly against the spool. There should be no space between spool cap and thread spool.

Note: Not all thread spools are manufactured in the same way. If you experience problems with the thread, turn it in the opposite way or use the vertical position.

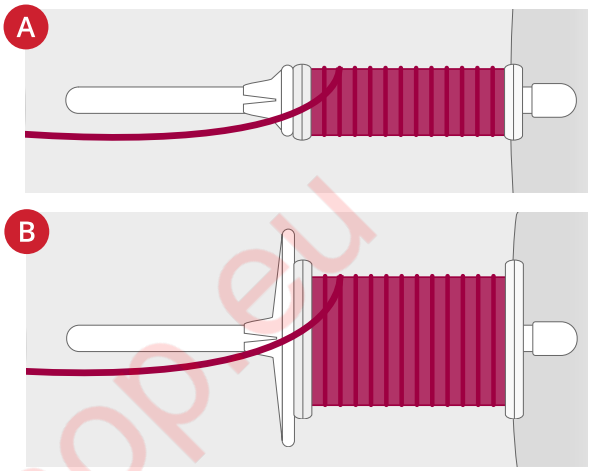

Vertical Position

Lift the spool pin up and all the way to the right. Slide on the large spool cap. For spools smaller than the medium size spool cap or when using specialty threads, place a felt pad under the thread spool to prevent the thread from reeling off too fast. For larger spools, the felt pad is not needed.

Note: No spool cap should be placed on top of the spool as this prevents the spool from rotating.

Note: When the spool pin is used in the vertical position, the thread tension might need to be adjusted manually.

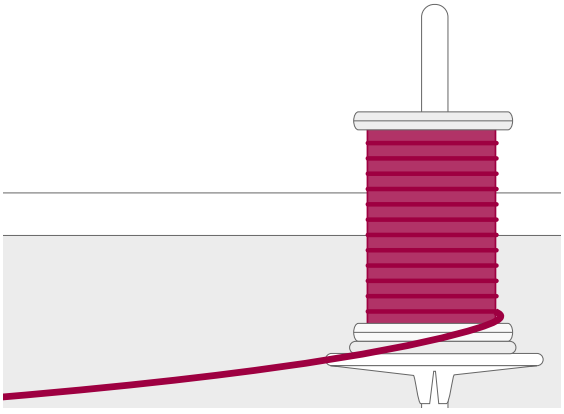

Auxiliary Spool Pin

The auxiliary spool pin is used for a second spool when sewing with a twin needle.

Lift the auxiliary spool pin up and to the left. Slide on a spool cap. For spools smaller than the medium size spool cap, place a felt pad under the thread spool to prevent the thread from reeling off too fast. For larger spools, the felt pad should not be used.

www.sewshop.eu

Bobbin Spool Pin

The bobbin spool pin is used when winding the bobbin.

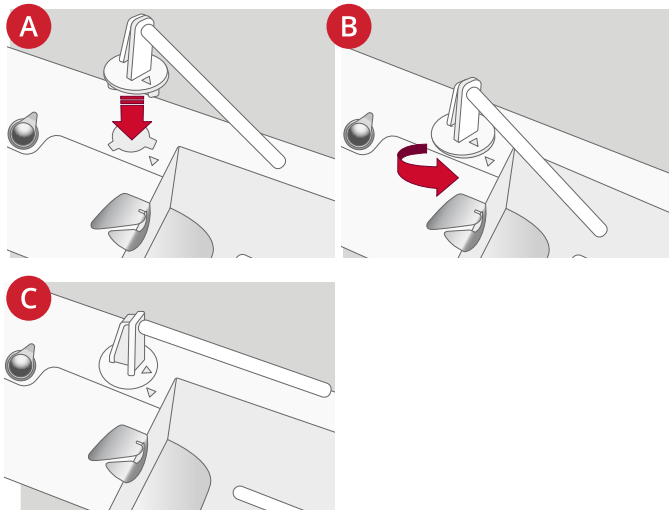

Mount the Bobbin Spool Pin

Place the bobbin spool pin on top of the spool pin socket (A), aligning the arrow on the spool pin with the arrow on the socket.

Push the bobbin spool pin down and turn to the right (B) until it clicks in place (C).

Remove the Bobbin Spool Pin

Turn the bobbin spool pin towards you until the arrows align.

Pull the spool pin upwards to remove it.

Spool Caps

Spool caps in three sizes are included with your machine. Always use a spool cap slightly larger than the thread spool to prevent the thread from snagging. The flat side of the spool cap should be pressed firmly against the spool. There should be no space between the spool cap and the thread spool.

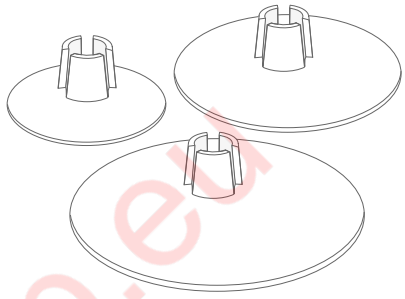

When using the vertical spool pin position, no spool cap is needed except when the thread on the spool is running low. If the thread is snagging on the top of the thread spool, place a spool cap on top, but do not press the spool cap all the way down.

Threads

There are many threads on the market today developed for different purposes.

Your Quilt Expression™ 725 machine is designed for all types of threads and spool sizes. See for information on achieving optimal results with different types of thread and different sizes/styles of thread spools.

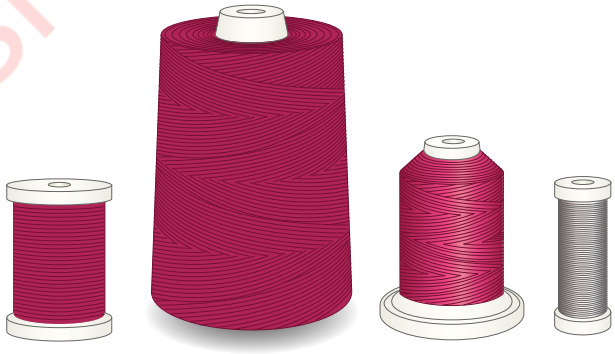

All Purpose Sewing Thread

All purpose sewing thread is made of synthetic, cotton or cotton covered polyester. This type of thread is used for most sewing projects, including garments, home decor, and quilting.

www.sewshop.eu

Embroidery Thread

Embroidery thread is made from a variety of fibers: rayon, polyester, acrylic or metallic. These threads create a smooth glossy appearance for embroidery and other decorative stitching.

Embroidery thread is not typically used in the bobbin unless both sides of the project will be seen. A light weight, embroidery bobbin thread is often used in the bobbin instead. The lighter weight thread does not build up under the embroidery.

Note: When using a metallic or a flat film thread for embroidery, you may need to use a needle with a larger eye and lower the embroidery speed.

Transparent Thread

Transparent thread, also called monofilament thread, is a single clear synthetic thread. It is used for quilting and other sewing techniques. When winding a bobbin, wind at half speed and fill the bobbin half full.

www.sewshop.eu

Needles

The sewing machine needle plays an important role in successful sewing. Use only quality needles. We recommend needles of system 130/705H. The needle package included with your machine contains needles of the most frequently used sizes.

⚠ *Be sure to match the needle to the thread you are using. Heavier threads require a needle with a larger needle eye. If the needle eye is too small for the thread the needle threader may not work properly.*

Universal Needle
Universal needles have a slightly rounded point and come in a variety of sizes. For general sewing in a variety of fabric types and weights.

Stretch Needle
Stretch needles have a special scarf to eliminate skipped stitches when there is a flex in the fabric. For knits, swimwear, fleece, synthetic suedes and leathers.

Embroidery Needle
Embroidery needles have a special scarf, a slightly rounded point and a slightly larger eye to avoid damage to thread and materials. Use with metallic and other specialty threads for embroidery and decorative sewing.

Denim Needle
Denim needles have a sharp point to penetrate tightly woven fabrics without deflecting the needle. For canvas, denim, microfibers.

Wing Needle
Wing needles have wide wings on the side of the needle to poke holes in the fabric when sewing entredeux and other hemstitches on natural fiber fabrics.

Important Needle Information

Change the needle often. As a general rule, needles should be changed every 6-8 hours of actual stitching time.

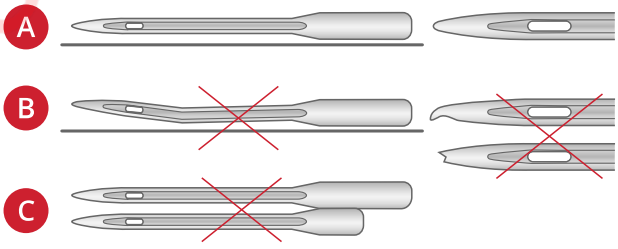

Always use a straight needle with a sharp point (A).

A damaged needle (B) can cause skipped stitches, breakage or snapping of the thread. It can also damage the needle plate.

Do not use asymmetrical twin needles (C), they can damage your sewing machine.

www.sewshop.eu

Changing the Needle

1. Use the hole in the multipurpose tool to hold the needle.
2. Loosen the needle screw.
3. Remove the needle.
4. Insert the new needle using the multipurpose tool. Push the new needle upwards with the flat side away from you until it will go no further.
5. Tighten the needle screw carefully.

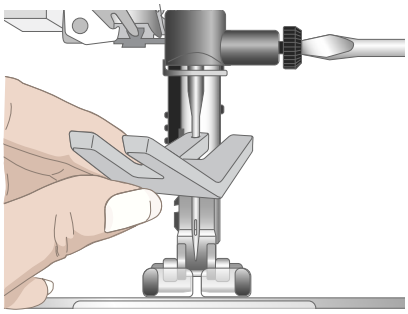

www.sewshop.eu

Threading

Threading the Upper Thread

Make sure that the presser foot is raised and the needle is in the up position.

1. Place the thread spool on the main spool pin and fit a spool cap of the right size.
2. Hold the thread with two hands as illustrated. Floss the thread under the thread guide (A) from front to back. Pull thread back into and through threading slot.
3. Place the thread from right to left under the thread guide on the pre-tension disc (B).

   Note: Continue to hold the thread lightly next to the thread guide (A) throughout the threading process. This will create a bit of tension on the thread and ensure that the thread is properly seated in the threading path.

4. Pull the thread between the thread tension discs (C). Thread down through the right threading slot and then upwards through the left threading slot. Bring the thread from the right into the take-up lever (D) until it clicks into place (E), and down in the left threading slot to the last thread guide (F) just above the needle.
5. Thread the needle using the needle threader or manually from front to back.

Note: The weight and irregular surface of specialty threads such as metallic increases the amount of friction on the thread. By reducing the tension, the risk of needle breakage and thread breakage is reduced.

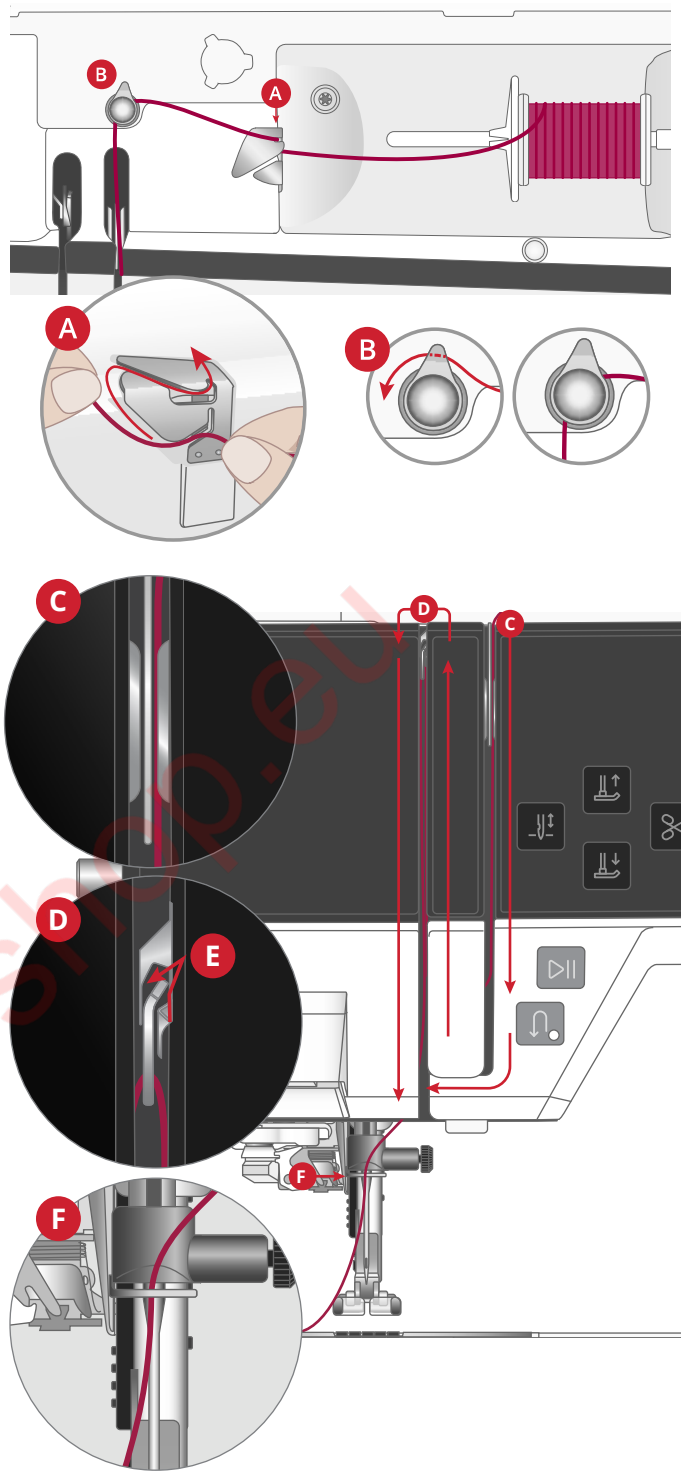

www.sewshop.eu

Automatic Needle Threader

The needle threader allows you to thread the needle automatically. The needle must be in the up position to use the needle threader.

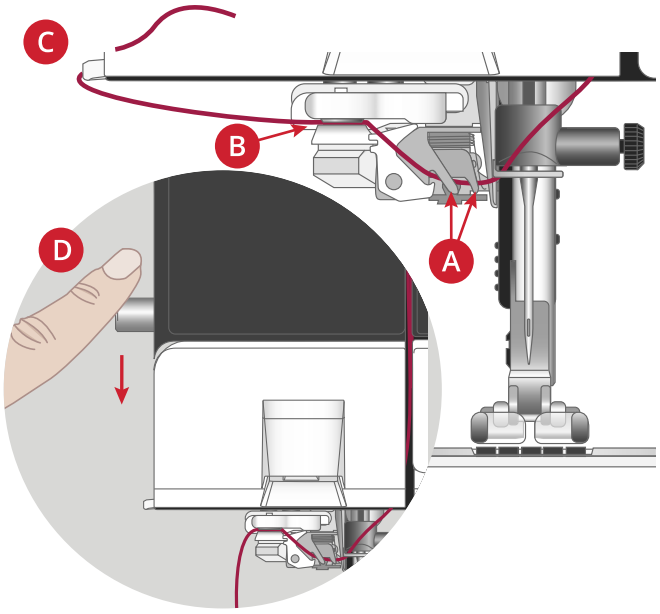

1. Press the presser foot down button, followed by the needle up button to make sure they are in the correct position.
2. Place the thread under the hook (A) and pull it between the discs (B) until it "clicks" into place.
3. Pull the thread up to the thread cutter (C) and cut excess thread by pulling the thread from back to front into the thread cutter.
4. At the left side of the sewing machine is the needle threader lever (D). In a rapid movement, push the lever down and release it. The needle threader will be lowered and thread the needle.
5. Pull out about 4" (10cm) of thread beyond the needle eye. Press the presser foot up button to raise the presser foot. Place the thread under the presser foot.

⚠ *The needle threader is designed to be used with needles size 70-120. You cannot use the needle threader with needles size 65 or smaller, wing needles, twin needles or triple needles.*

Specialty threads such as invisible and other stretchy threads, metallic or flat metallic threads, and some heavy weight threads may not be caught correctly by the hook on the needle threader. If this happens, the needle will not be threaded. Try using the needle threader again or thread the needle manually.

When threading the needle manually, make sure that the needle is threaded from front to back.

Selecting Correct Thread/Needle Combination

⚠ *The combination of the thread weight and the needle size is extremely important when using the needle threader. Unsuitable combinations, such as using a heavy weight thread for a fine needle, may cause damage to the needle threader.*

Avoid using fine needles with heavy fabrics to reduce the risk of bending the needle. Using the needle threader with a bent needle may cause damage to the needle threader.

www.sewshop.eu

Fabric		Thread	Needle
Woven light	Chiffon, organza, batiste, challis, crepe de chine, etc.	Light weight threads: • fine cotton, polyester or silk sewing thread • rayon embroidery thread	Universal 130/705H 70/10-80/12
Woven medium	Calico, quilting fabrics, crepe, broadcloth, velvet, etc.	Medium weight threads: • fine/normal cotton or polyester sewing thread • rayon embroidery thread	Universal 130/705H 80/12-90/14
Woven heavy	Denim, tweed, canvas, terrycloth, etc.	Medium/heavy weight threads: • normal cotton or polyester sewing thread • top stitching thread • rayon embroidery thread	Universal 130/705H 90/14-110/18
Stretch light	Tricot, single knit jerseys, etc.	Light weight threads: • fine cotton or polyester sewing thread • rayon embroidery thread	Stretch 130/705H-S 75/11
Stretch medium	Sweater knits, double knit, velour, swimwear, etc.	Medium weight threads: • normal cotton or polyester sewing thread • rayon embroidery thread	Stretch 130/705H-S 90/14
Stretch heavy	Sweater knits, fleece, etc.	Medium weight threads: • normal cotton or polyester sewing thread • rayon embroidery thread	Stretch 130/705H-S 90/14
Leather	Suede and leather	Medium weight threads: • normal cotton or polyester sewing thread • rayon embroidery thread	Stretch 130/705H-S 90/14
Vinyl	Vinyl, faux leather and suede	Medium weight threads: • normal cotton or polyester sewing thread • rayon embroidery thread	Universal 130/705H 80/12

Note: Specialty fabrics and threads may require a special needle for best stitch results. Refer to your PFAFF® retailer for more information on needle types and sizes for your sewing needs.

www.sewshop.eu

Threading for Twin Needle

Replace the sewing needle with a twin needle. Make sure that the presser foot and needle are in the up position.

1. Place the thread spool on the main spool pin and fit a spool cap of the right size.

   Insert the auxiliary spool pin. Slide on a large spool cap and a thread spool to the spool pin.

2. Hold both threads with two hands as illustrated. Floss the threads under the thread guide (A) from front to back. Pull threads together back into and through threading slot.

3. Place one of the threads from right to left under the thread guide on the pre-tension disc, place the other thread directly into the pre-tension discs (B).

   Note: Continue to hold the threads lightly next to the thread guide (A) throughout the threading process. This will create a bit of tension on the threads and ensure that the threads are properly seated in the threading path.

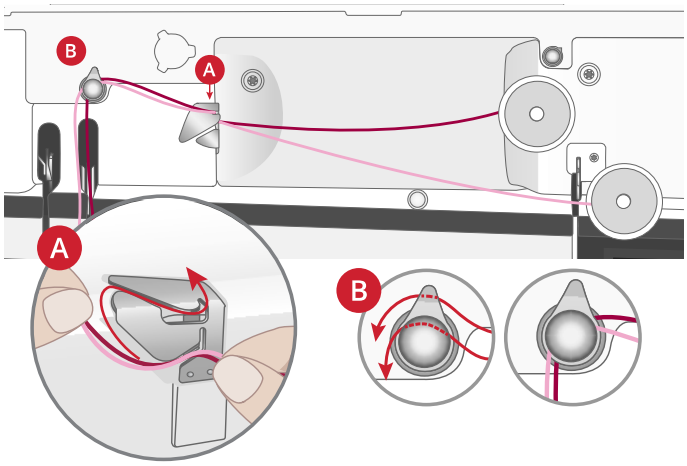

4. Pull the threads between the thread tension discs (C). Make sure that you place one thread to the left and one to the right side of the tension discs.

   Thread down through the right threading slot and then upwards through the left threading slot. Bring the threads from the right into the take-up lever (D) until they click into place (E), and down in the left threading slot. Place both threads inside the needle thread guide (F). Make sure the threads do not become twisted together.

5. Thread the twin needle manually.

   Note: The weight and irregular surface of specialty threads such as metallic increases the amount of friction on the thread. By reducing the tension, the risk of needle breakage and thread breakage is reduced.

   Tip: When using larger thread cones, use the optional creative™ Spool Stand, and place both threads in the telescope.

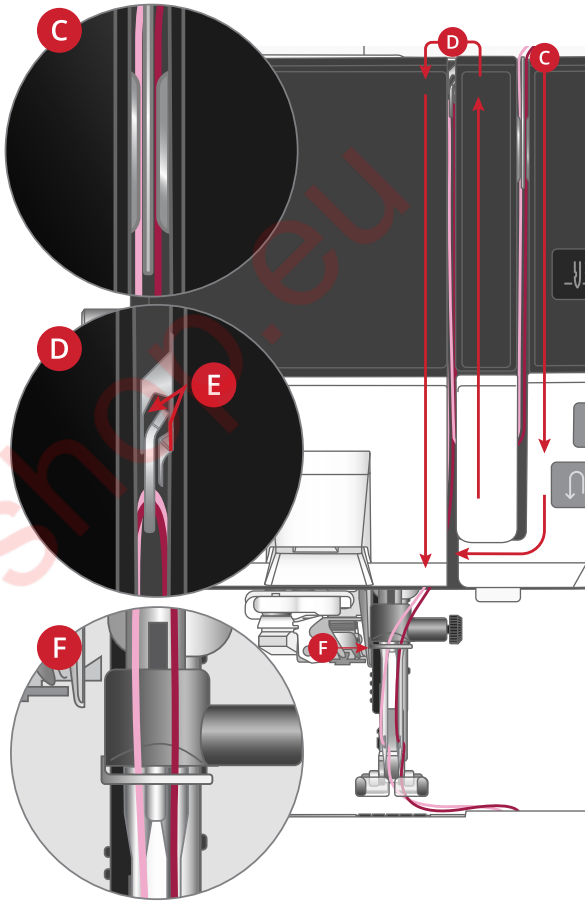

www.sewshop.eu

Threading Tips and Hints

There are many threads on the market today developed for different purposes. The quality and structure of the thread as well as the shape and size of the thread spool can affect the behavior of the thread. Threads can also behave differently if the spool is full or nearly empty.

Note: Always test sew on a scrap piece of fabric to check the sewing result.

If the thread is of a quality that unwinds easily and slides down on the standing thread spool it can get caught under the thread spool around the spool pin and break. Place the large spool holder on the spool pin with the flat side up before placing the thread spool.

If the thread spool has the same diameter as the large spool holder, place a thread net as illustrated from below over the spool before placing it on the spool pin.

Note: To prevent snagging or increased thread tension on the thread, the thread net should cover the lower part of the thread spool only, not the top where the thread spool narrows.

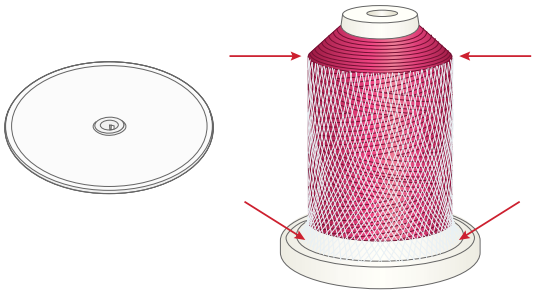

www.sewshop.eu

Bobbin Winding

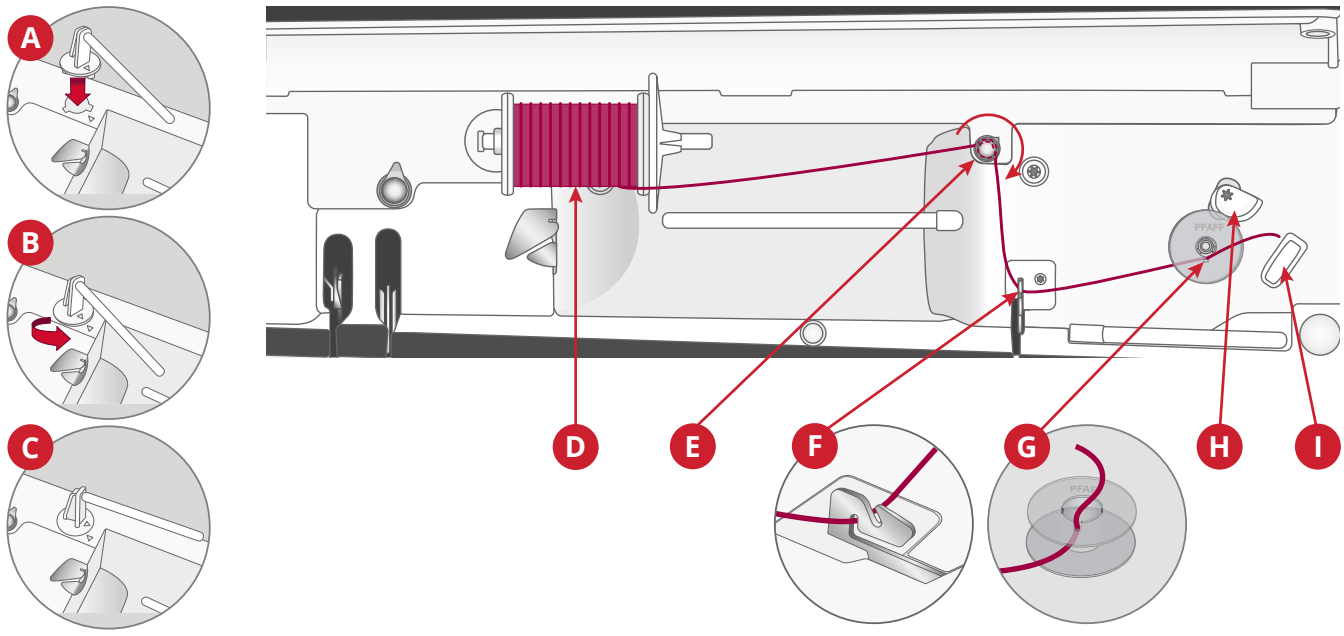

All types of thread, including specialty threads such as invisible or other stretchy threads, metallic or flat metallic threads, should be wound directly from the bobbin spool pin without passing the needle and presser foot.

Note: Always wind specialty threads at lower speed.

1. Place the bobbin spool pin on top of the spool pin socket (A), aligning the arrow on the spool pin with the arrow on the socket.
2. Push the bobbin spool pin down and turn to the right (B) until it clicks in place (C).
3. Place a thread spool on the bobbin spool pin. Slide a spool cap firmly against the spool (D).
4. Bring the thread clockwise, a turn and a half, around and into the bobbin winding thread tension guide (E).
5. Bring the thread through the bobbin winding thread guide (F) as illustrated.

   ⚠ *For some specialty threads, following the normal threading path will result in a bobbin that is wound too tight. If this happens, bypass bobbin thread tension (E) to reduce the amount of tension on the thread. Pull the thread directly to the bobbin thread guide (F) instead.*

6. Thread through the slot in the bobbin (G) from the inside to the outside.

   Place the bobbin on the bobbin spindle (G). The bobbin only fits on one way, with the logo facing out.

   ⚠ *The bobbins included are designed especially for your Quilt Expression™ 725 machine. Do not use bobbins from other machine models.*

7. Push the bobbin winding lever (H) towards the bobbin. A pop-up appears on screen. To adjust winding speed drag the slider. Hold the thread end firmly when starting to wind. Touch the play button in the popup window and let the thread wind a few turns. Touch the pause icon and cut the loose thread end close to the bobbin. Press play again.
8. When the bobbin is full, the bobbin winding lever will move back and the winding will stop automatically. The pop-up message closes. Remove the bobbin and cut the thread using the bobbin winding thread cutter (I).

www.sewshop.eu

Winding Through the Needle

When using the same thread in the needle and bobbin, it is convenient to wind a new bobbin directly through the needle without having to unthread/re-thread your machine.

⚠ *We do not recommend winding speciality threads such as invisible or other stretchy threads, metallic or flat metallic threads through the needle. Very heavy and coarse threads should not be wound through the needle either as the thread tension can become too high, causing the needle to break. Wind specialty threads as described under* *Bobbin Winding, page 29*.

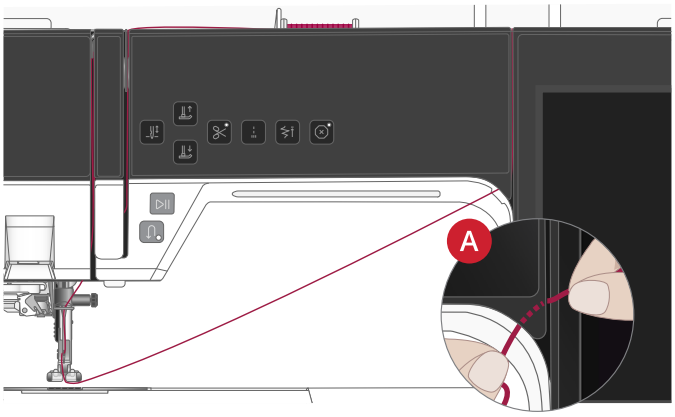

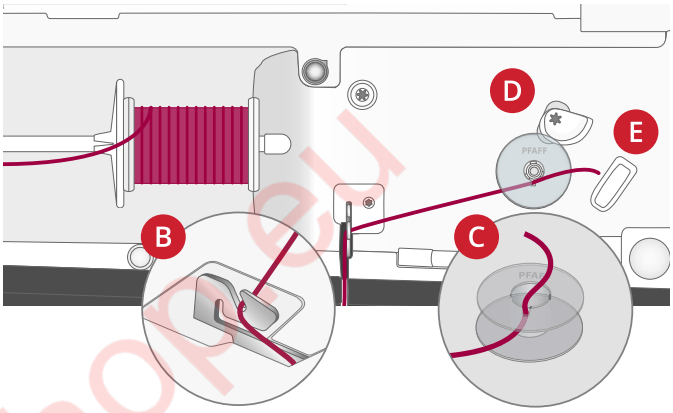

1. Make sure that the presser foot and needle are in the up position.
2. Thread the machine as described under Threading the Upper Thread, page 24.
3. Pull the thread from the needle, under the presser foot and up to the right.

   Note: Always use a metal presser foot when bobbin winding from the needle.

4. Use both hands to bring the thread through bobbin winding thread guide (A), up through the threading slot and from left to right through thread guide (B).
5. Thread through the slot in the bobbin (C) from the inside to the outside.

   Place the bobbin on the bobbin spindle. The bobbin only fits on one way, with the logo facing out.

   ⚠ *The bobbins included are designed especially for your Quilt Expression™ 725 machine. Do not use bobbins from other machine models.*

6. Push the bobbin winding lever (D) towards the bobbin. A pop-up appears on screen. To adjust winding speed drag the slider. Hold the thread end firmly when starting to wind. Touch the play button in the popup window and let the thread wind a few turns. Touch the pause icon and cut the loose thread end close to the bobbin. Press play again.

   Note: Always use a metal presser foot.

7. When the bobbin is full, the bobbin winding lever will move back and the winding will stop automatically. The pop-up message closes. Remove the bobbin and cut the thread using the bobbin winding thread cutter (E). Cut the free thread end close to the bobbin.

www.sewshop.eu

Inserting the Bobbin

Use only the bobbins designed for your Quilt Expression™ 725 machine.

1. Remove the bobbin cover by pushing it towards you (A).
2. Place the bobbin in the bobbin case. It drops in only one way with the logo facing up. The bobbin will then rotate counterclockwise when you pull the thread.
3. Place your finger on the bobbin to keep it from turning as you pull the thread firmly to the right and then to the left into the tension spring (B) until it "clicks" into place. Continue threading around (C) and to the right of the thread cutter (D).
4. Replace the bobbin cover. Pull the thread to the left to cut.

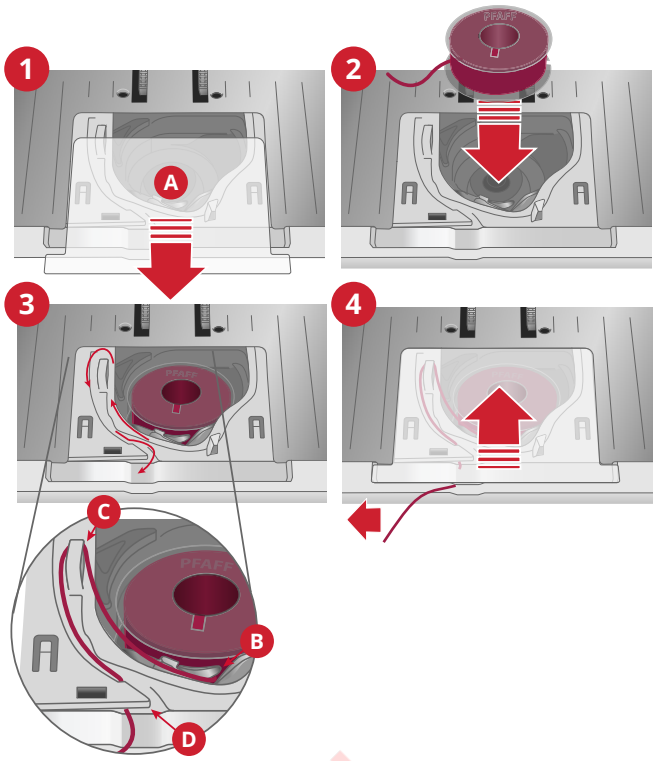

www.sewshop.eu

IDT™ System (Integrated Dual Feed)

For sewing with an even feed also on more challenging fabrics, your machine provides the ideal solution: the integrated dual feed, IDT™ system. The IDT™ system feeds the fabric from the top and bottom at the same time. The material is fed evenly, eliminating puckering on seams in light weight fabrics such as silk and rayon. The dual feed action of the IDT™ system prevents layers from shifting while sewing, keeping quilt layers aligned and ensuring a more perfect match when sewing plaid or striped fabrics.

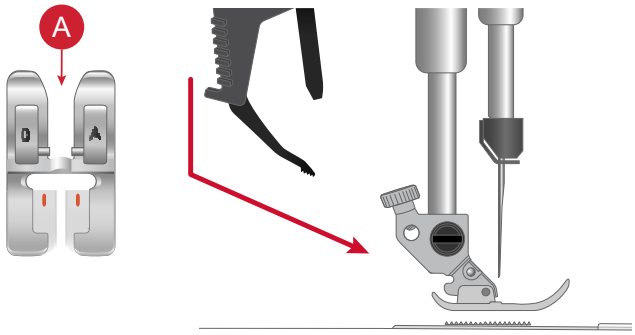

Engaging the IDT™ System

Important: For all work with the IDT™ System, use presser feet with the center back cut-out (A). Raise the presser foot to extra high position. Press the IDT™ System down until it engages.

Note: Your machine is equipped with an IDT sensor. You will be alerted if the IDT System isn't set according to the stitch recommendations for the selected stitch.

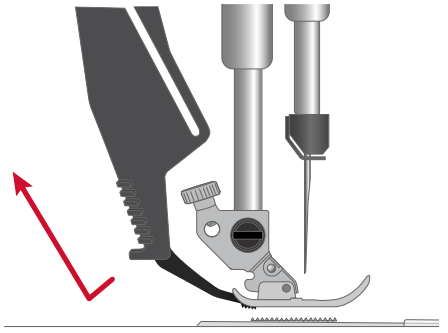

Disengaging the IDT™ System

Raise the presser foot. Hold the IDT™ system with two fingers at the ribbed ankle. Pull the IDT™ system down, then pull it away from you to release the IDT™ system slowly upward.

Changing the Presser Foot

Remove Presser Foot

Press the presser foot downwards until it disengages from the presser foot holder.

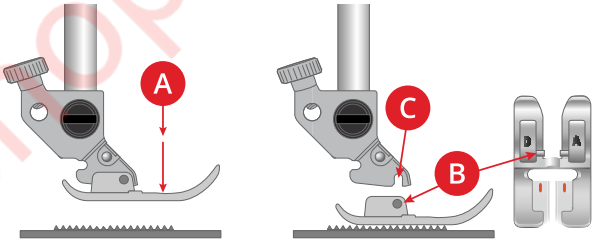

Attach Presser Foot

Line up the pins on the foot with the gap underneath the presser foot holder. Press upwards until the foot snaps into place.

You can also use the presser foot up/down buttons to raise or lower the presser foot holder. Place the presser foot under the presser foot holder, so that the pins of the foot snap onto the presser foot holder when lowered.

www.sewshop.eu

Attaching the Sensormatic Buttonhole Foot

1. Snap on the sensormatic buttonhole foot.
2. Insert the plug, with the three dots facing out, into the accessory socket at the back of the sewing head.

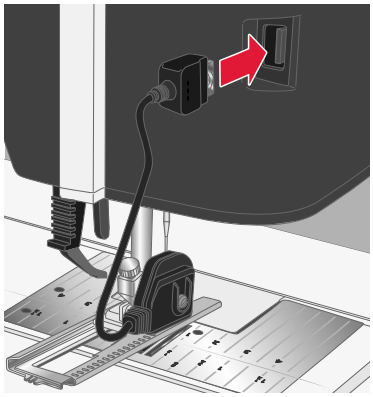

Changing to Straight Stitch Plate

The straight stitch plate is recommended for certain straight stitch sewing techniques, such as quilt piecing. The smaller hole in the straight stitch plate supports the fabric closer to the needle and helps prevent the fabric from being pulled down into the bobbin area, especially at the beginning and/or end of a seam.

1. Remove the presser foot. Remove the bobbin cover.
2. Make sure that the feed teeth are lowered. Place the screwdriver under the needle plate as shown and gently turn the screwdriver to pop off the needle plate.

   Note: Lower the feed teeth by touching the presser foot up and extra lift button.

   Note: When changing the needle plate, clean any lint and threads from the bobbin area.

3. With feed teeth lowered, position the straight stitch plate so that it fits into the notch at the back (A). Press the straight stitch plate down (B) until it clicks into place. Replace the bobbin cover.

   ⚠ *To prevent needle breakage or damage to the plate, remove any accessory that is not compatible with the Straight Stitch Needle Plate, such as twin needle.*

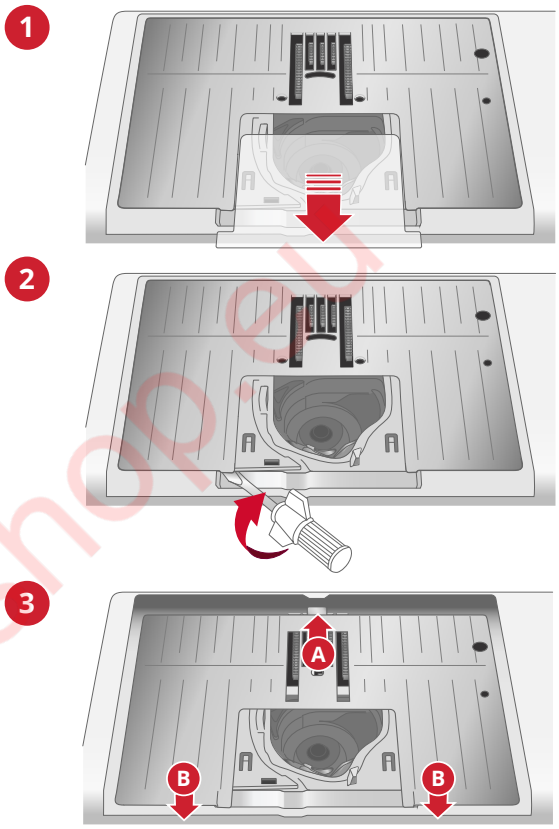

www.sewshop.eu

Getting Started with WiFi and CREATIVATE™

Connect to a Network with WiFi
Touch the WiFi button. Select from the list of available networks. If your network is password protected, you will be prompted to enter the password to connect.

For more information, see WiFi Introduction.

WiFi icon

Connect to CREATIVATE Services
When you have established a WiFi connection, touch the CREATIVATE icon and sign in to your account. If you do not have a CREATIVATE account, you can easily create one, visit CREATIVATE.com for more information.

CREATIVATE icon

www.sewshop.eu

The Multi-Touch Screen

www.sewshop.eu

Main Functions

Images may look different than your screen and/or machine depending on what machine model and color settings you have. All functionality has been verified to be accurate for this model.

Home

The home screen is shown every time you start your Quilt Expression™ 725 machine. The home screen is always accessible through the home button.

CREATIVATE™ Services

With empowering design tools and intuitive software for every skill level, CREATIVATE gives you the magic touch on all your projects. Go to CREATIVATE.com to become a free Basic Member today.

Learning Center

This is where you will find tutorials in sewing, quilting as well as learn more about your machine, accessories, recommended needles and stabilizers.

User's Guide

Here you will find information about how to operate your Quilt Expression™ 725 machine and what the different features of the machine are.

You can look through the user's guide using the table of contents or sorted by an alphabetical index.

Save

Touch to save your stitch or sequence at anytime.

Quick Help

On almost every function and icon on screen, you can get a short description by using the quick help function.

Touch the question mark icon. Then touch an icon or an area on the screen you want information about.

Some quick helps will refer to the user's guide for more information.

Common Functions

The following functions on the screen are used frequently.

OK

Confirms changes and pop-up messages and returns to previous window.

www.sewshop.eu

Cancel

Cancels changes and pop-up messages and returns to previous window.

Touch & Hold

Some buttons have additional functions, marked with an arrow at the lower right corner. To access those functions, touch & hold on the icon for a few seconds.

Smart Toolbox

The smart toolbox is available in the sewing area. Touch & hold anywhere in your work area to open the smart toolbox and select the option you want.

The options included in the smart toolbox differ depending on where they are used. For example; duplicate, delete, mirroring and edit.

Customize Your Work Area

The Quilt Expression™ 725 allows you to access the functions you use the most by arranging them as you desire on the screen. Touch & hold the move icon in the center until the control pop's up. Drag and drop it to desired location. Your machine will remember your changes when turning your machine off. Touch the x to close the control. To reset the toolbar to default, use smart toolbox and select reset toolbar.

Move

www.sewshop.eu

Top Bar

Several functions are accessible on the top bar, for example CREATIVATE, home button, quick help, and settings.

Note: All functions may not always be available at the same time.

1. *User's guide*
2. *Project viewer*
3. CREATIVATE
4. *Home*
5. *Clock*
6. *Quick help*
7. *Update available*
8. *WiFi*
9. *Settings*

Secondary Top Bar

In the secondary top bar you will see recommendations for your selected stitch, see which features that are currently active, as well as information such as stitch name and speed.

You can expand and collapse by clicking the arrow. Then you will see the full name of all the icons.

1. *Recommendations*
2. *Information*
3. *Active features*
4. *Extended secondary top bar*

Recommendations

Recommendations are only available in sewing mode. It shows recommendations for the selected stitch regarding presser foot, IDT™ System, needle plate, and/or if stabilizer should be used.

Information

Shows for example the selected stitch. It also shows the speed setting for selected stitch.

Active Features

This section shows activated features, such as tie-off options, needle down or changes you have made in settings.

www.sewshop.eu

WiFi & CREATIVATE™ Services

www.sewshop.eu

WiFi Introduction

Your Quilt Expression™ 725 machine features WiFi, which makes it possible to connect your machine wireless to the CREATIVATE services.

Getting Started With WiFi

Touch the WiFi button and activate WiFi. Select a network from the list of available networks. If your network is password protected, you will be prompted to enter the password to be able to connect.

Touch the settings icon to see more settings for the network. You can also see the signal strength and if the network is password protected, indicated with a closed padlock.

You can also connect to a network with WiFi in WiFi Settings.

If you do not get any signal or have a low signal strength see Troubleshooting.

A. *WiFi is disconnected. Connect to a network through WiFi button or WiFi settings.*

B. *WiFi is connected with low signal strength.*

C. *WiFi is connected with medium signal strength.*

D. *WiFi is connected with high signal strength.*

E. *WiFi is connected but the network does not work properly.*

Firmware Updates

Firmware Update Using WiFi

It is always recommended that you install the latest firmware in your machine.

To be able to get the latest firmware you need to connect to a network using WiFi. When connected, your machine will automatically search for an available firmware update. If the machine has detected that there is a newer firmware available, the firmware update icon will be visible. Touch the icon to download and install the latest firmware.

When the update is completed the machine will restart automatically. Check the firmware version number in settings, Machine Information.

Indication that your machine does not have the latest firmware and that an update is available.

www.sewshop.eu

Firmware Update Using a USB Device

Visit the PFAFF® website and find your machine. Here you will find the available updates.

1. Download the update firmware zip file. Unzip the file and copy the file (.clo) to a USB device.

   Note: Do not change the name of the file or do not copy the file into an existing folder on the USB device.

   Note: Make sure that there is no old firmware update file (.clo) on the USB stick when copying the new firmware update file (.clo). The file name is not unique.

2. Make sure that the machine is turned off. Connect the USB device loaded with the new firmware version to a USB port on your machine.
3. Press and hold the reverse button, located on the front of the machine, and turn on your machine with the ON/OFF button. Release the reverse button when an update icon is shown on the screen.
4. The firmware update will be verified and installed. The machine may restart several times during the update process. Do not turn off the machine.
5. When the update is completed the machine will restart automatically. Check the software version number in settings, Machine Information.

CREATIVATE Services

With empowering design tools and intuitive software for every skill level, CREATIVATE gives you the magic touch on all your projects. Go to CREATIVATE.com to become a free Basic Member today.

CREATIVATE

CREATIVATE Blog

In CREATIVATE blog you can view the latest product news, sewing instructions and get inspiration!

The machine needs to be connected to WiFi to be able to see the feed.

CREATIVATE App

You can download the app for free to your mobile device. Visit CREATIVATE.com to learn more. You can download directly in your App Store of choice.

A. *Signed in to CREATIVATE*
B. *Synchronizing files with CREATIVATE*
C. *Not signed in to CREATIVATE*

www.sewshop.eu

www.sewshop.eu

www.sewshop.eu

Home Screen

Home Screen— Overview

The home screen is filled with guidance, inspiration and help, making sure that you get the assistance you need in order to utilize your machine's full potential.

Here you'll find the Learning Center feature, which includes a large amount of different tutorials to choose from.

If you're in need of inspiration on what to create, read the CREATIVATE blog, which is updated frequently.

Read your user's guide directly on screen for instant help.

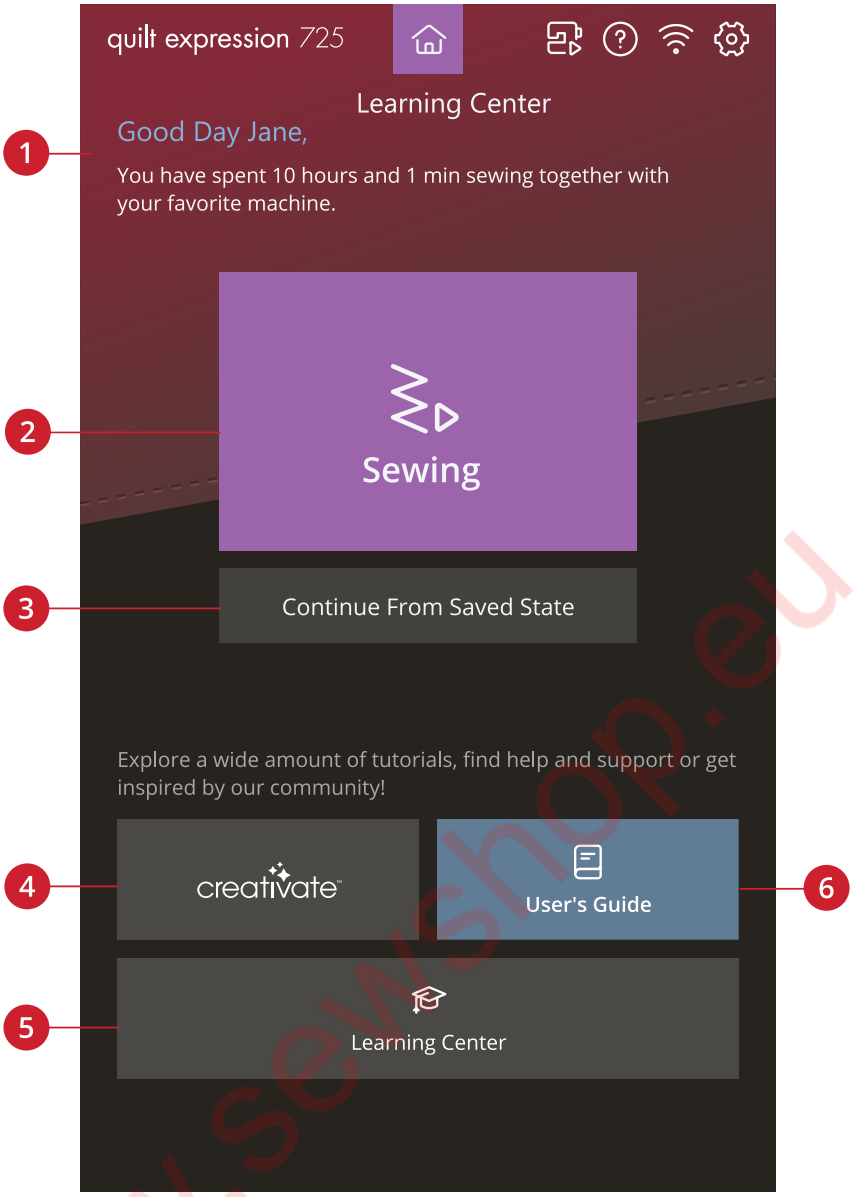

1. User profile
2. Sewing — start new session
3. Continue from saved state
4. CREATIVATE
5. Learning Center
6. User's guide

Edit Machine Nickname

On your home screen you can see the name of your machine.

This can be useful when owning more than one machine to distinguish one machine from another. The name will be shown on the screensaver.

You can change your machine's nickname in settings.

www.sewshop.eu

User Profile

When you are signed in to your CREATIVATE account, your user name will be shown. You will receive information on, for example, how much time you've spent sewing on your machine.

Sewing — Start New Session

Click here if you want to go to sewing mode directly.

Continue from Saved State

When saving current state, all your adjustments are stored and you can continue later by touching "continue from saved state".

Note: You can only have one current state saved at a time.

CREATIVATE

In CREATIVATE blog you can view the latest product news, sewing instructions and get inspiration!

The machine needs to be connected to WiFi to be able to see the feed.

User's Guide

Here you will find information about how to operate your Quilt Expression™ 725 machine and what the different features of the machine are.

You can look through the user's guide using the table of contents or sorted by an alphabetical index.

www.sewshop.eu

Learning Center

You have a large amount of different tutorials to choose from, which step-by-step will guide you through text, illustrations and animations.

You can learn a lot of different techniques within sewing and quilting. If you need help with the basics of your machine, for example how to; thread the machine or wind the bobbin, there are tutorials for that as well. You can also find tutorials on how to use your accessories.

Use the search function to search within the Learning Center.

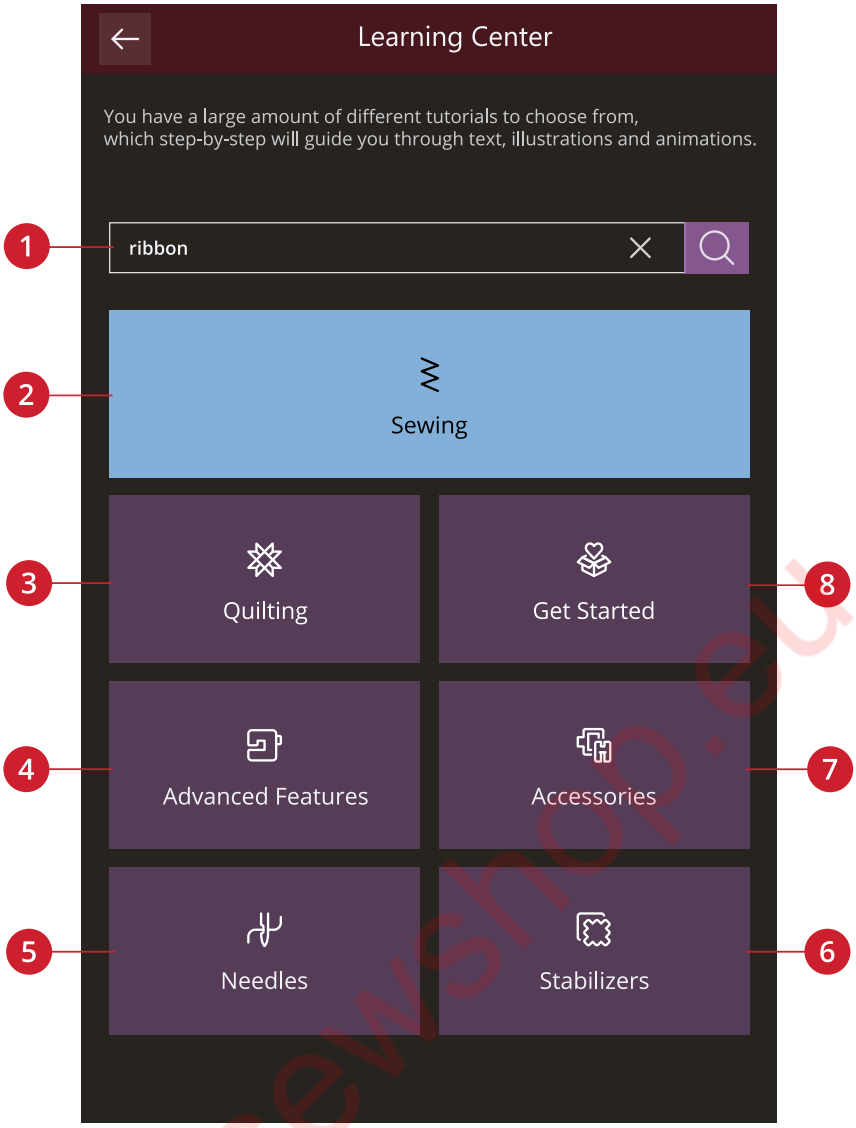

1. Search
2. Sewing
3. Advanced features
4. Needles
5. Stabilizers
6. Accessories
7. Get started
8. Quilting

Sewing

When loading a sewing technique the machine will select the best stitch and settings for your project. Depending on which choices you make,Learning Center will recommend the most suitable sewing techniques.

Quilting

Quilting is a method of stitching layers of material together. There are several different quilting techniques, we will walk you through some of the most common ones.

www.sewshop.eu

Get Started

In this section you will find help that has to do with the basics of the machine such as threading the machine and how to engage and disengage the IDT™ System.

Advanced Features

Your machine has a lot of great features which enables you to create unique stitches and sequences, shape your texts and much more.

All tutorials in this category will walk you through all of these features included in your machine.

Accessories

There is a wide assortment of PFAFF® accessories that are compatible with your machine.

The tutorials in this category will show how to use accessories both for sewing and quilting.

Needles

In this category you can read more about all the different types of PFAFF® needles that you can choose from.

Stabilizers

When embroidering, the use of a stabilizer is necessary. PFAFF® offers a selection of different types of stabilizers, depending on your need.

In this category you can find information about all available stabilizers in our assortment and when they are recommended to be used.

- **Cut-a-Way**: Cut-a-Way stabilizers are stabilizers that need to be cut away by using scissors. It will stay on the fabric to make the embroidery more stable.
- **Batting**: Use batting between your top fabric and backing to add body to your project.
- **Water soluble stabilizer**: The stabilizers in this category are stabilizers that dissolves in water. They are very useful when embroidering lace and cutwork embroideries.
- **Specialty**: In this category you will find stabilizers for special uses.
- **Tear-a-Away**: Tear-a-way stabilizers are temporary stabilizers. They are easy to remove after embroidering

www.sewshop.eu

Project Viewer

When loading a tutorial from Learning Center it will be shown in the project viewer.

You can enlarge the images shown by touching it.

Load the recommended stitch for the loaded technique by touching the stitch in the viewer.

In every tutorial, content is filtered out based on the chosen technique.

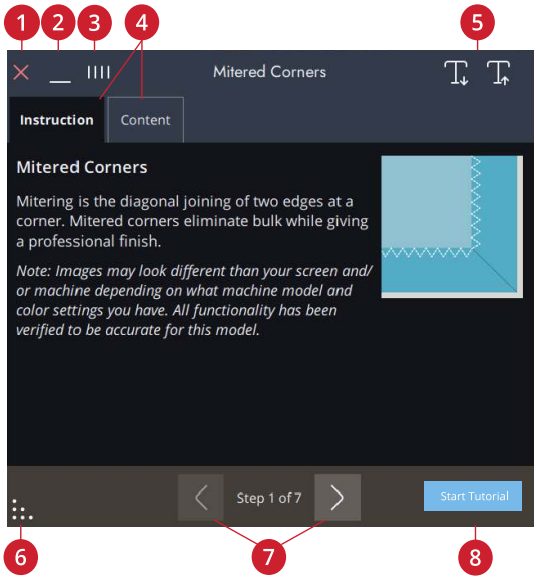

1. *Cancel*
2. *Minimize*
3. *Detach/move*
4. *Instruction/content*
5. *Decrease/increase text size*
6. *Expand*
7. *Step backward/forward*
8. *Start tutorial*

How to Play Animations

In the video player you can pause, rewind, fast forward, set the animation on repeat and turn full screen mode on/off. Touch cancel to close the video player. Touch & hold on rewind to start the animation from the beginning.

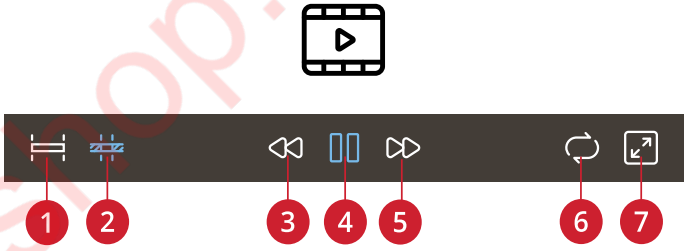

1. *Watch full animation*
2. *Watch clip*
3. *Rewind (touch & hold to go to beginning)*
4. *Play/pause*
5. *Fast forward*
6. *Repeat on/off*
7. *Full screen on/off*

www.sewshop.eu

www.sewshop.eu

Sewing

Sewing Mode – Overview

In sewing mode you can select stitches, adjust and sew them. Your selected stitch will be shown in actual size in the stitch field.

Use the Stitch Creator™ feature and sequence to create your own stitches and sequences.

You will see active features and be given recommendations based on selected stitch.

Note: All symbols and options will not be shown at the same time.

Note: All options in the bottom bar menu may not always be visible. The bottom bar menu is dynamic, meaning different buttons will be shown depending on what item is selected.

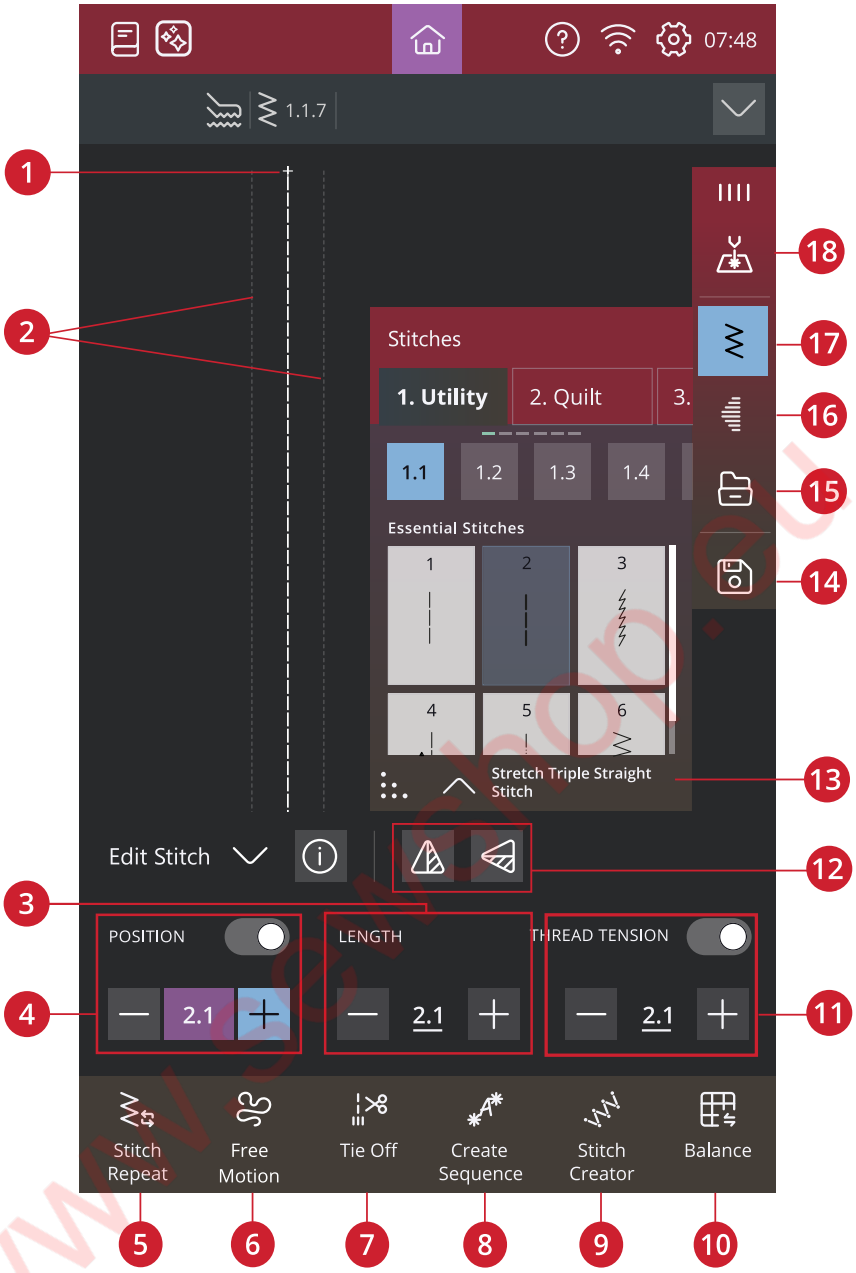

1. Stitch start
2. Maximum stitch width indication
3. Stitch length/stitch density
4. Stitch width/stitch positioning
5. Stitch repeat
6. Free-motion options
7. Tie-off options
8. Sequence
9. Stitch Creator™
10. Balance
11. Thread tension/presser foot pressure
12. Mirror side to side/mirror end to end
13. Stitch information
14. Save
15. File manager
16. Tapering
17. Stitch menu
18. Laser setup

www.sewshop.eu

Load a Stitch

Touch the stitch menu and select the desired stitch. Available stitch categories are listed horizontally, swipe to see more categories. All categories have sub categories. When you select a stitch, it will automatically be loaded and you get a short description of the selected stitch. The select stitch window can be expanded if you touch and drag the triangle in the lower corner.

From the file manager you can load stitches or sequences that you have saved in your CREATIVATE folder or on a USB device. In file manager you will see all your saved files e.g. stitches, designs and fonts. Learn how to organize your files in file manager.

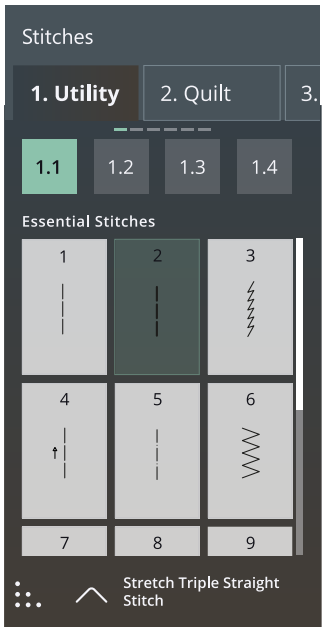

Information and Sewing Recommendations

Recommendations are shown in the secondary top bar. Your machine automatically gives you recommendations depending on the selected stitch and current setting.

The following recommendations can be shown:

Presser foot, IDT™ System and stabilizer. The straight stitch plate recommendation will be shown when a free-motion option is selected with a straight stitch.

1. *Presser foot recommendation*
2. *IDT™ System recommendation*
3. *Stabilizer recommendation*
4. *Straight stitch plate*
5. *Needle recommendation*

Laser Setup

The laser guidance appears in front of the needle and can be used as a guide when for example stitching parallel lines of decorative stitching.

You can turn on the laser by activating it in the laser setup menu on screen.

A red light will be lit in front of the presser foot.

You can move the position of the laser guidance by touching the – or + controls. You can also decrease or increase the brightness.

In settings, you can fine tune the center position.

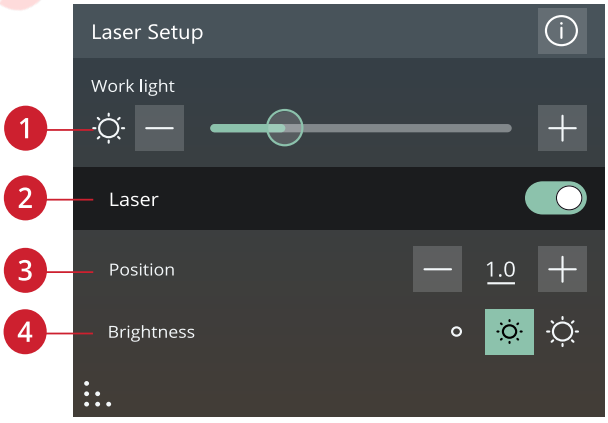

1. Work light
2. Laser off/on
3. Position
4. Brightness

www.sewshop.eu

Stitch Settings

Your machine will set the recommended settings for each selected stitch. You can make your own adjustments to the selected stitch. The changes will only affect the selected stitch and will be reset to default when selecting another stitch or turning your machine off. To save your adjusted stitch, touch save.

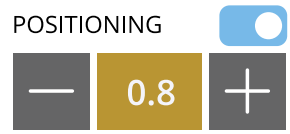

Example of stitch setting control

The controls available on the screen will change depending on what stitch or sequence is loaded. Some stitches have more than one control, and an alternative switch bar will appear. Touch the alternative switch bar to change to an alternative control for a different stitch setting. Touch it again to change back to the previous control. The different stitch settings are described below.

If you need an explanation of the icons, touch the drop down arrow to open a panel with description of the icons.

Note: When trying to exceed minimum or maximum settings for width and length, a warning sound will be heard. The default setting is always shown in black numbers.

Stitch Width

Decrease or increase the stitch width using – and + in the control. The number shows stitch width in mm/inch.

Changed stitch position may limit the stitch width adjustments.

Stitch Positioning

On certain stitches with a width less than 9 mm it is possible to change the stitch position. Use – to move the stitch to the left and + to move the stitch to the right. The number shows the needle start position in mm in relation to center needle position. The machine has a maximum of 37 needle positions (for a straight stitch).

The stitch position can only be changed to the limit of the maximum stitch width. Changing the stitch positioning will also limit the stitch width adjustments.

Stitch Length

Decrease or increase the stitch length using – and + in the control. The number shows the set stitch length in mm/inch. If lengthening a zigzag stitch or a decorative stitch, the entire stitch will be stretched out. If lengthening a stitch where the density can be adjusted, the entire stitch will be longer but the density of the satin stitches will remain the same.

www.sewshop.eu

Stitch Density

The stitch density control adjusts the density (the distance between the individual satin stitches that make the entire stitch). The density does not affect the actual length of the entire stitch.

Touch – to decrease the density. Touch + to increase the density. The number shows the distance between satin stitches in mm/inch.

Tip: Decrease the density to get different visual effects e.g. when using speciality threads.

Mirroring

To mirror a stitch or stitch sequence sideways, touch mirror side to side. To mirror a stitch or stitch sequence lengthwise, touch mirror end to end.

Mirror side to side/mirror end to end

Tip: Use the smart toolbox to open a shortcut for mirroring.

Note: Some stitches e.g. buttonholes cannot be mirrored.

Buttonhole Slit Length

Set the buttonhole slit length by using - to decrease and + to increase when sewing a buttonhole with the Sensormatic Buttonhole Foot.

Button Stitch Repetition

When sewing a button, you can set the number of stitch repeats. Use the – or + in the control to decrease or increase the number of stitch repeats.

Thread Tension

For the best stitch appearance and durability make sure the threads meet evenly between the two fabric layers.

Correct tension

If the bobbin thread is visible on the top side of the fabric, the thread tension is too tight. Reduce the thread tension.

Tension too tight

If the upper thread is visible on the back side of the fabric, the thread tension is too loose. Increase the thread tension.

Tension too loose

For decorative stitches and buttonholes the upper thread should be visible on the back side of the fabric.

Make a few tests on a scrap piece of the fabric you are going to use and check the tension.

Presser Foot Pressure

Touch + to increase or - to decrease the pressure of the presser foot on the fabric.

www.sewshop.eu

Balance

When sewing on special fabrics or doing a special technique, the balance may need to be adjusted.

Start by sewing the stitch on a piece of scrap fabric. Touch the balance icon. Change the preview on the screen to match your sewn sample by using the + and - in the controls. When you sew again, the balance will be corrected.

Balance

Free Motion Options

All stitches on your machine can be sewn in free-motion to create unique effects.

Choose between different free-motion options.

For all free-motion sewing the feed teeth will lower automatically and the fabric must be moved manually.

When sewing free motion with a straight stitch, use the straight stitch plate for best result. Read about how to change to straight stitch plate.

Note: Make sure that the IDT™ System is disengaged.

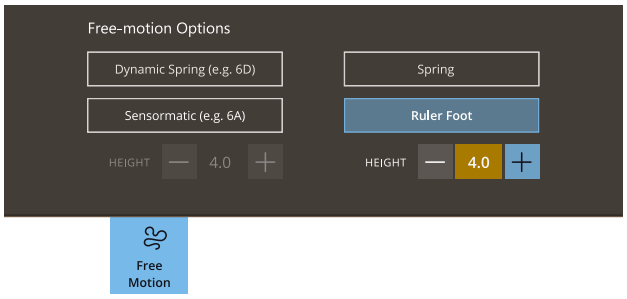

Dynamic Spring (e.g. 6D)

The Dynamic Spring Foot measures the fabric thickness and will raise and lower with each stitch to hold the fabric on the needle plate while the stitch is being formed.

Note: The Dynamic Spring Foot 6D is recommended for use with straight stitch. Activate Stitch Width Safety in Settings.

Spring

A spring foot will raise and lower with each stitch to hold the fabric on the needle plate while the stitch is being formed.

Note: Optional spring feet can be purchased at your local authorized PFAFF® dealer.

⚠ *Do not use a spring foot if Sensormatic Free-Motion is activated, since the needle might damage the presser foot.*

Free Motion Ruler Foot (Optional)

Select free motion ruler foot to use the optional free motion ruler foot.

The presser foot floats over the fabric while sewing.

www.sewshop.eu

Sensormatic

Activate to set the machine in Sensormatic mode for presser foot 6A or some other sensormatic foot, e.g yarn couching etc.

When sewing free-motion at low speed the presser foot will raise and lower with each stitch to hold the fabric on the needle plate while the stitch is being formed. At higher speed, the presser foot floats over the fabric while sewing.

Skipped stitches can occur if your fabric moves up and down with the needle as you are stitching. Lowering the presser foot height will reduce the space between the presser foot and the fabric and eliminate the skipped stitches.

You can increase or decrease the presser foot height.

Note: Be careful not to reduce the presser foot height too much. The fabric must still move freely under the presser foot.

Tie-Off Options

These options allow you program tie-off at the beginning and at the end of a stitch. It is also possible to program thread cut at the end of a stitch.

When touching the tie-off icon, three options open to let you select different functions; tie-off beginning, tie-off end and thread cut.

Your settings are shown under active features.

Note: For immediate tie-off, use the tie-off button, found on the front of the machine.

Sewing with Tie-Off Options selected

- The tie-off beginning will be performed as soon as you start to sew.
- Press the stop button to perform tie-off end. The action indicator lamp will be lit to indicate that the machine will finish the stitch and do the tie-off.
- When a thread cut is programmed, the machine will automatically cut the threads after performing a stitch. The needle and presser foot will raise.

Tie-off beginning/tie-off end

Save Stitch

You can choose to save your file to the CREATIVATE folder or to a USB device (only visible as a selection when an USB device is connected). Previously saved designs, stitches, sequences and/or fonts are shown.

Save button

Read about organizing your saved stitches in File Manager.

When saving current state, adjustments are stored and you can continue later by touching “Continue from Saved State” at the home screen.

Note: You can only have one current state saved at a time.

www.sewshop.eu

Sewing Programs

These techniques may require some special presser feet and accessories.

Stitch Repeat

Stitch repeat makes it possible for you to program an exact seam length, it also lets you decide how many repetitions of a stitch you want to sew.

Stitch repeat

Patchwork Program

The patchwork program makes it possible for you to program an exact seam length that can be sewn repeatedly. This is very useful when quilting.

To program a seam length, touch stitch repeat and select patchwork program. Sew until you reach your desired seam length and press the reverse button while sewing. The reverse indicator on the machine will be lit until the current repetition is finished. This will set the length of the seam.

Once you have set the length of a seam, the patchwork program is inactive. The single stitch program is now activated instead. The number of stitch repetitions included in your programmed patchwork seam is shown. Adjust the length of the seam, by increasing/decreasing the number of repetitions using the +/- controls.

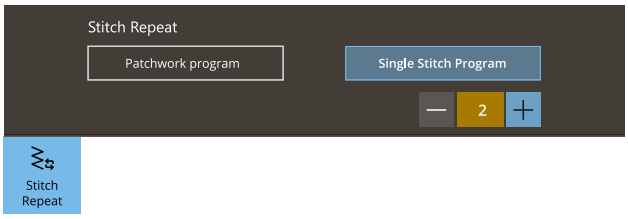

Single Stitch Program

The single stitch program lets you decide how many repetitions of a stitch you want to sew. Touch stitch repeat and select single stitch program. Set the number of repetitions using the +/- controls. The machine will stop automatically when the repetitions are sewn.

Combining Programs

Combining tapering and patchwork programs makes it possible to repeat a tapered seam with the same length.

Activate tapering. Sew your desired length. When the reverse button is pressed the reverse indicator will increase the light until the end taper and last repetition of the stitch is finished.

The seam is now programmed and the single stitch program is activated. When you start sewing again the seam will automatically be repeated with the same length.

The number of repetitions are shown. Adjust the length of the seam, by increasing/decreasing the number of repetitions using the +/- controls.

Note: The tapering is included in the repetitions shown on the screen.

www.sewshop.eu

Sewing Techniques

In Learning Center you can find all tutorials for the sewing techniques mentioned below.

In basic sewing techniques you will find the most commonly used sewing techniques.

Seam

A seam sews two pieces of fabric together with a seam allowance that will usually be pressed open. In most cases, edges of the seam allowance are finished with an overcast stitch before sewing the seam.

Seams in stretch fabric must stretch with the fabric. The stretch stitch makes a stretchy seam that is suitable for sewing together pieces of light stretch fabric.

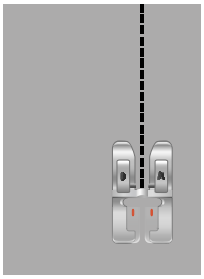

Overcast

Overcast fabric edges to prevent fraying and to help them lay flat. It is easier to overcast before the garment is sewn together.

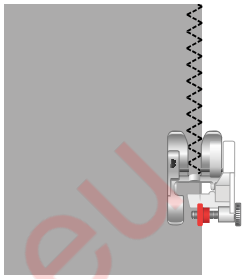

Seam and Overcast

The seam/overcast stitch sews the seam and overcasts the edges all at one time. The seam/overcast technique is perfect for stitching ribbed neckbands and cuffs. There are a number of different seam/overcast stitches in your machine.

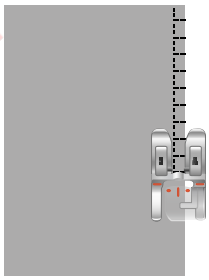

Baste

Use this stitch to temporarily sew two pieces of fabric together for fitting garment or for marking purposes.

A longer stitch length makes it easy to remove the stitches.

www.sewshop.eu

Blind Hem

The blind hem creates an invisible hem on garments. There are two types of blind hems; one is recommended for medium to heavy fabrics, the other for stretch. The blind hem is not suggested for light weight fabric, leather and vinyl.

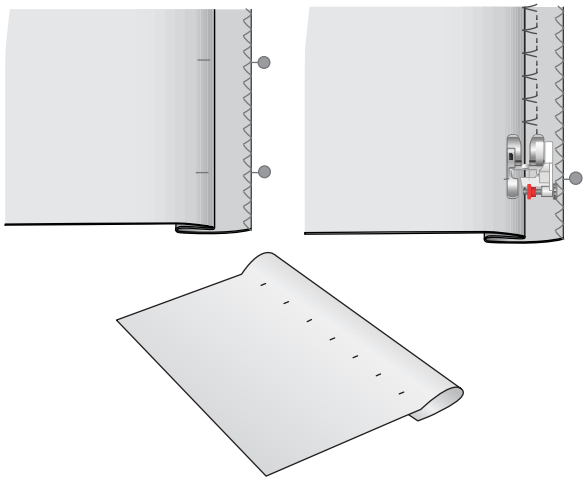

Hem

Hem is a garment finishing method, where the edge of a piece of cloth is folded and sewn to prevent unravelling of the fabric.

Buttonholes

Fabric should be interfaced and/or stabilized where buttonholes are to be sewn.

Sew a test buttonhole on a fabric scrap to verify the desired length of the buttonhole.

Measure the desired distance from the fabric edge and then add the length of your buttonhole.

When sewing, place the finished fabric edge with stabilizer underneath the presser foot, facing away from you.

Use the marking on your fabric to position the starting point.

Manual Buttonhole

Manual buttonholes are recommended for woven heavy fabric. To sew a manual buttonhole, use the 5M - Manual Buttonhole Foot.

1. Sew the first column as long as you want the buttonhole to be.
2. Touch the reverse button. The machine sews the bartack and the second column.
3. When the columns are aligned, touch the reverse button to sew the second bartack.

You can use the repeat buttonhole icon to sew identical copies. The repeat buttonhole icon is only visible when sewing a buttonhole manually. Deselect to cancel the function.

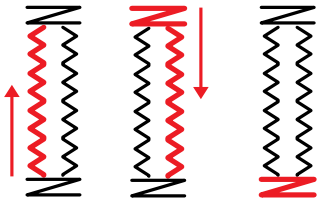

Sewing direction for buttonholes without satin stitches or satin stitch buttonholes sewn with presser foot 5M.

www.sewshop.eu

Automatic Buttonhole

When sewing buttonholes on woven light, woven medium, woven heavy, stretch light or vinyl fabric you can use the Sensormatic Buttonhole Foot. The Sensormatic Buttonhole Foot will sew automatic buttonholes. Read about how to attach the Sensormatic Buttonhole Foot.

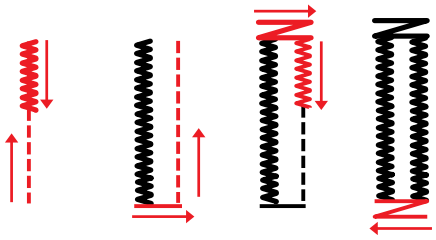

Sewing direction for satin stitch buttonholes sewn with the Sensormatic Buttonhole Foot.

Corded Buttonhole

Corded buttonholes are recommended when sewing buttonholes on stretch medium or stretch heavy fabric. Use gimp threads for a more stable durable and professional appearance. Use pearl cotton or a regular gimp thread. Attach the 5M - Manual Buttonhole Foot and use the finger on the back of the foot for holding the cord when sewing.

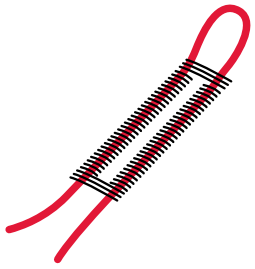

Programmable Button Sew On

Sew buttons, snaps, hooks and eyes quickly with your machine. Select sew on button in the Learning Center feature.

If needed, increase or decrease the number of stitches that will fasten the button on the fabric, using stitch repeats.

Note: Place the thin end of the multipurpose tool under the button when sewing on light fabrics. Use the thick end for heavier fabrics. Hold in place on the fabric with transparent tape.

Note: The recommended width is set for most buttons. If you sew a tiny button or a very large coat button, decrease (–) or increase (+) the stitch width until the swing of the needle sews in the holes of the button or snap. A tip is to use the mirror side to side function to easier set the distance between the holes.

Note: An optional button foot for sewing on buttons can be purchased at your local authorized dealer.

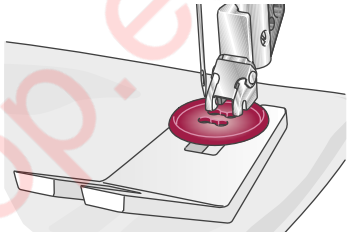

www.sewshop.eu

Tapering Stitches

The tapering menu will be visible when a stitch that can be tapered is selected. Touch the tapering menu to select from different angles for beginning and end tapers. The machine will sew the beginning tapered point and then continue with the selected stitch. When the desired length has been sewn, touch the reverse button. The stitch will taper to the end.

Select taper "off" to remove any tapering at the beginning or end of the stitch. If you select taper "off" on both the beginning and end, the stitch will be a regular stitch without tapering.

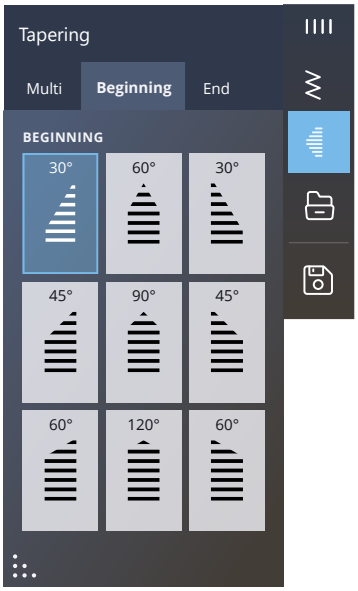

4-Way Stitches

The 4-way stitch allows you to sew several sturdy stitches in four different directions. You will have different 4-way stitches to choose from. This is especially helpful when patching trouser legs on a free arm. The 4-way stitches are programmed at a fixed length and stitch width.

Special Stitches For Optional Presser Feet

Includes special stitches like candlewicking and edge stitches. These techniques may require special presser feet and accessories. This is indicated by the optional presser foot icon on the screen.

Tip: Detailed information on the current selected stitch is shown in the stitch information.

Exclusive Sewing Techniques

Ribbon Stitches

Add dimensional elements to your decorative stitching with the beautiful single, double and triple Ribbon stitches in your machine. Narrow ribbons are woven into these special stitches as you sew. For best results, use stabilizer, appropriate for your fabric type and weight, under your fabric to support your stitching.

Stacking Stitches

Sew beautiful decorations in two colors using the Stacking stitches. The Stacking stitches consist of pairs of matching stitches that are designed to be sewn on top of each other.

www.sewshop.eu

Floating Stitches

Floating stitches create a special effect where the connecting stitches are invisible. There are two different ways to use this technique; for the first technique, attach the optional edge joining foot, place a folded fabric centered on a piece of stabilizer and sew along the fold. The second technique is to sew two pieces of fabric together.

Once finished, unfold the fabric, giving it a good tug to reveal the decorative part of the stitch to the front.

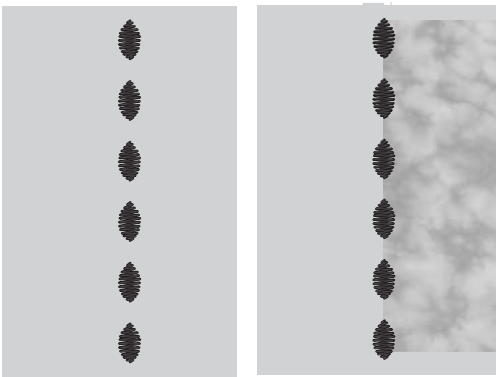

Radiant Stitches

Radiant stitches are an exclusive PFAFF® sewing technique. These stitches have a built in stop allowing you to sew a line of stitches in any shape. Make beautiful necklines or pocketlines on garments.

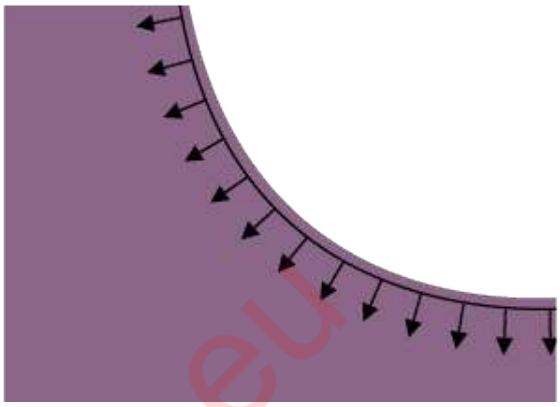

Lace Edge Stitches

Sew beautiful Lace Edge stitches on your projects using the Bi-Level Guide Foot and water soluble stabilizer.

www.sewshop.eu

Pop-up Messages in Sewing

To make your sewing experience as convenient as possible, your machine will sometimes communicate with you using pop-up messages. Those messages can contain warnings, recommendations, information or prompt you to perform an action.

Below, some of the messages that can appear are listed and explained.

Bobbin Thread Low

When the bobbin thread is running low, a pop-up message appears giving you notice that you will soon need to replace the bobbin. If you want to continue sewing without replacing the bobbin, touch the foot control and do not close the pop-up.

When the bobbin is replaced with a full one, touch OK in the pop-up.

Stitch Width Safety

When stitch width safety is activated, the following pop-up message appears when you choose a stitch not suitable for stitch width safety.

Cannot Use the Needle Threader

If using a twin needle, touch OK and thread it manually. If using a regular needle, touch OK and deselect twin needle in the settings. Use the automatic needle threader again.

Remove Sensormatic Buttonhole Foot

The Sensormatic Buttonhole Foot needs to be removed before doing any of the following:

- Sewing a stitch that is not a buttonhole.
- Sewing a buttonhole that can not be sewn with the Sensormatic Buttonhole Foot.
- Sewing an adjusted buttonhole saved without the Sensormatic Buttonhole Foot in the Vault folder.

Check Upper Thread

The machine stops automatically if the upper thread runs out or breaks. Re-thread the upper thread, close the pop-up message and start sewing.

Attention!

If the machine stops and this pop-up appears on the screen you need to stop sewing. Wait a moment and touch OK when it is enabled. Check the needle size and condition. Check for correct threading.

Twin Needle

The following pop-up message appears when you choose a stitch not suitable for twin needle.

www.sewshop.eu

Stitch Creator™ Feature

www.sewshop.eu

Stitch Creator™ Feature – Overview

In Stitch Creator™, you can create completely new stitches and adjust every single stitch point. You can create a stitch all on your own or alter already built–in stitches or letters.

The width of the stitch field is 9mm and maximum stitch length is 5mm. The grid and the vertical center line will help you to create your stitch.

If you want to edit a stitch created in Stitch Creator™, touch and hold on the work area and the smart toolbox will appear.

Your stitch can be saved to the Vault folder or to a USB device.

A stitch created in Stitch Creator™ feature can be used as part of a sequence. In sequence, locate your saved stitch. The stitch will be inserted at the cursor position in the sequence.

Note: Some stitches and fonts are not available to edit in Stitch Creator™ feature, for example buttonholes, stitches wider than 9mm and four direction stitches.

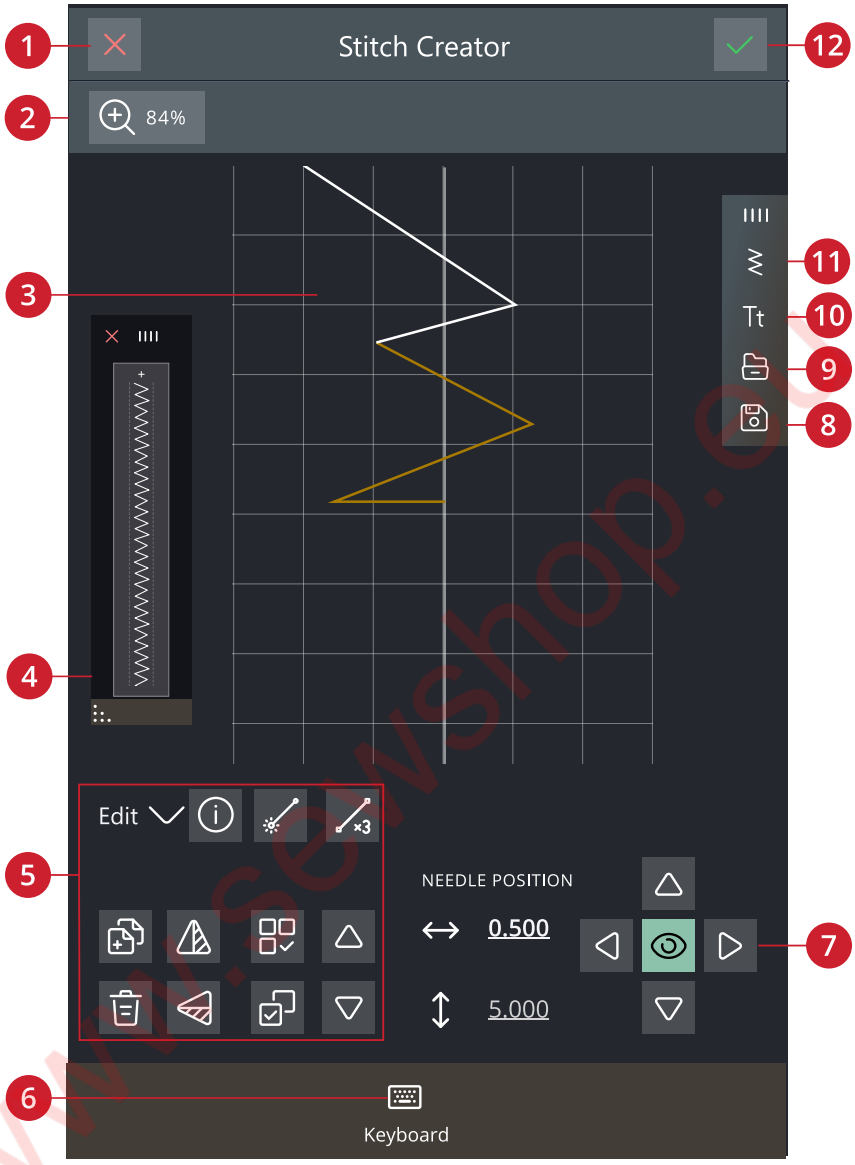

1. Cancel
2. Zoom options
3. Stitch field
4. Preview
5. Edit stitch
6. Keyboard
7. Control
8. Save
9. File manager
10. Font menu
11. Stitch menu
12. OK

www.sewshop.eu

Getting Started with Stitch Creator™

Definition of a Stitch Point

A stitch point is the point where the needle goes through the fabric. Stitches are connected by stitch points.

Each stitch point is indicated by a dot (A). A marked stitch point is indicated by a filled square (B). A selected stitch point is indicated by an outlined square (C).

Select Stitches/Stitch Points

To select a stitch point, just touch it on screen. If selecting more than one stitch point, the stitches in between will automatically be selected as well.

To mark the previous or next stitch point in your stitch, touch the select multiple icon and use the arrows. The current stitch position is shown between the arrows. The first number is the marked stitch point. The second number is the total number of stitch points.

To select all stitch points at the same time, touch the select all icon.

Select Multiple

To select the stitch points next to the marked stitch point, touch select multiple and then touch the arrows to select the next stitch point.

Use the up arrow to select stitch points before the marked stitch point and the down arrow to select the stitch points after the marked stitch point.

Note: If selecting stitch points using the up arrow, you can deselect them by touching the down arrow.

Select All

To select all stitch points at the same time, touch the select all icon. To deselect all, touch the icon again.

Preview

When making a stitch in Stitch Creator™ a preview of your created stitch will appear. This will help you see what the stitch will look like when having several repeats.

www.sewshop.eu

Edit Stitch in Stitch Creator™

Zoom Options

When using the zoom slider, the focus will be on the marked stitch point.

The distance between the grid lines at 100% zoom, equals 1mm on the fabric. If you zoom in on the stitch field, the distance between the grid lines will change. If zooming out, only the edge lines of the stitch field will be visible.

You can also zoom in/out by pinching and stretching or use the zoom to 100%.

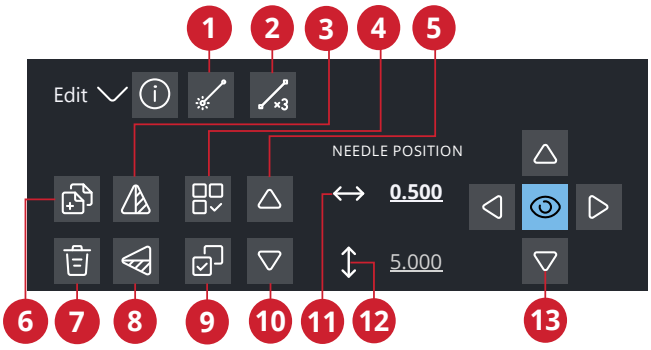

1. *New stitch point*
2. *Triple stitch*
3. *Mirror side to side*
4. *Select all*
5. *Previous stitch*
6. *Duplicate*
7. *Delete*
8. *Mirror end to end*
9. *Select multiple*
10. *Next stitch*
11. *Actual needle position*
12. *Actual feeding length*
13. *Fine tuning controls*

Move

To move your stitch or stitch point, you can select stitch points directly on the screen using your fingers or by touching the arrows in the wheel.

The number next to the vertical position shows the actual needle position from the center line for the marked stitch point.

The number next to the horizontal position shows the actual feeding length from the previous stitch point.

Duplicate Selected Stitch Point

If you want to duplicate a stitch point, select the stitch point and use duplicate to create a copy.

If several stitch points are selected, all stitch points will be duplicated and inserted after the marked stitch point.

Touch & hold on the duplicate icon to enter the exact number of duplicates you want to insert.

Delete Selected Stitch Point

If you want to delete a single stitch point, select the stitch point and touch the delete icon. If more than one stitch point is selected, they will all be deleted when touching the delete icon.

Touch & hold on the delete icon to delete all stitch points in the stitch field.

Mirroring

The selected stitch point(s) will be mirrored horizontally and/or vertically.

Note: Only enabled if more than one stitch point is selected.

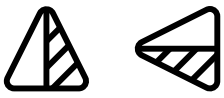

Mirror side to side/end to end

Triple Stitch

Touch the triple stitch icon and the selected stitch(es) will be tripled.

Note: Only enabled if more than one stitch point is selected.

Triple Stitch

www.sewshop.eu

Add a Stitch or Stitch Point

You can also add an existing stitch from the stitch selection shortcut in the menu bar or the selection menu.

Touch the icon to insert one single stitch point. The two stitch points will create a new stitch.

New Stitch

Pop-up Messages in Stitch Creator™ Feature

To make your sewing experience as convenient as possible, your machine sometimes communicate with you using pop-up messages. Those messages can contain warnings, recommendations, information or prompt you to perform an action.

Below, some of the messages that can appear are listed and explained.

Not an Editable Stitch
Some stitches are not available to edit in Stitch Creator™ feature. Buttonholes, stitches wider than 9mm and four direction stitches cannot be opened in Stitch Creator™ feature.

Sequence Out of Range
Your stitch sequence can be up to approximately 500mm (20″) long. If the sequence exceeds the maximum length this pop-up will let you know that stitch or stitch point you are trying to add will make the sequence too long.

www.sewshop.eu

www.sewshop.eu

www.sewshop.eu

Sequence

Sequence – Overview

In sequence, you can create and adjust a sequence of stitches. Combine various 9mm stitches, side-motion stitches and stitch fonts. Stitches made in Stitch Creator™ feature can also be inserted in a sequence. You can create sequences up to approximately 500mm (20") long. You can see how long your actual sequence is in the information area.

Touch to open Sequence

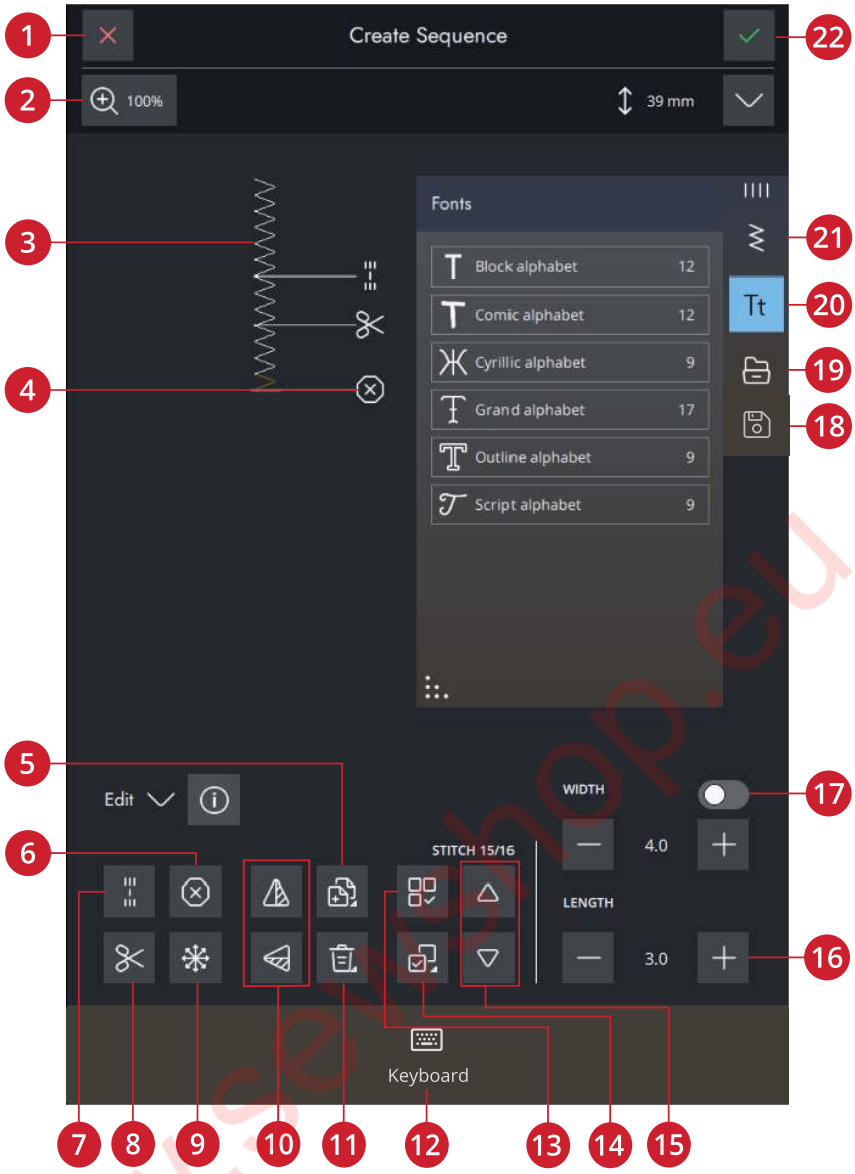

1. Cancel
2. Zoom options
3. Sequence in actual size
4. Inserted commands
5. Duplicate
6. Stop command
7. Tie-off command
8. Thread cut command
9. Directional stitches
10. Mirror side to side/mirror end to end
11. Delete
12. Keyboard
13. Select all
14. Select multiple
15. Step between stitches
16. Stitch length/stitch density
17. Stitch width/stitch positioning
18. Save
19. File manager
20. Font menu
21. Stitch menu
22. OK

www.sewshop.eu

Getting Started with Sequence

To start creating a sequence, select a desired stitch and/ or letter and add it to the sequence. The active position is marked by a cursor and the selected stitch or letter will be highlighted. Only the selected stitch/stitches can be adjusted. Inserted stitches will be placed at the cursor position.

Touch select multiple to select several stitches in a sequence. Touch select all to select all stitches.

Move the cursor through the sequence using the arrows. The number of selected stitch and total number of stitches in the sequence are shown between the arrows. When sewing a sequence it is possible to start sewing anywhere in the sequence. Use the arrows to step through the sequence.

Note: Buttonholes and 4–way stitches cannot be programmed.

Directional Stitches

Add directional stitches between stitches in a sequence. These stitches makes it possible to move stitches in various directions and you can create new shapes and wider large-area borders.

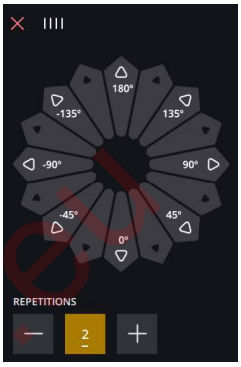

Directional stitches are straight stitches with a length of approximately 1mm and can be used in 16 different directions.

Touch your intended angle and one stitch will be inserted in the sequence at the cursor position.

The directional stitch can be deleted, duplicated or mirrored without closing the directional stitches pop-up.

Edit and Adjust Your Sequence

Adjust Stitch Settings

You can adjust the length and width of the stitch or change the density or position of the selected stitch. The adjustments work just like in sewing mode.

Duplicate

To duplicate a stitch, move the cursor to the stitch you want to duplicate. Touch the duplicate icon to copy the selected stitch.

Note: If you make adjustments on the stitch before duplicating, the copied stitch includes the adjustments.

Touch & hold to get a pop-up where you can enter the exact number of copies you want to insert.

Delete

If you want to delete a stitch or letter, touch the stitch or move the cursor to the stitch or letter you want to delete and touch delete. Touch & hold to delete the whole sequence.

www.sewshop.eu

Sequence Commands

You can insert tie-off, stop and thread cut commands into the sequence. These commands will be included in the sequence and will always be performed when sewing it.

Use the tie-off command if you want a secure tie-off. You can insert the tie-off commands anywhere in the sequence.

Insert a stop command if you want the machine to stop. This is useful for example at the end of the sequence if you want to sew it only once or to create a sequence in several rows.

Insert a thread cut command if you want the machine to tie-off and cut the threads and raise the presser foot.

Move the cursor to the position where you want to add a command. Select it and an icon will be added into the sequence. This confirms that the command is inserted and it also shows where the command will be performed in the sequence.

Note: The commands will appear on the screen in the order you program them.

www.sewshop.eu

Saving a Sequence

To save your file, touch save. You can choose to save the file to the CREATIVATE folder or to a USB device. Previously saved stitches, sequences and/or fonts are shown.

Save button

Learn how to organize your saved files in File Manager.

Sew Your Sequence

To sew your stitch sequence, load it to sewing mode by touching OK in sequence.

Adjust the Entire Sequence

To adjust the entire sequence, enter sewing mode by touching OK. Adjustments made in sewing mode will affect the entire sequence. Read about edit stitch.

Using Sequence in Sewing Mode

In sewing mode it is possible to start sewing anywhere in the sequence. Use the arrows to step through the sequence. In sewing mode you can edit your entire sequence.

If you are in sewing mode an want to edit a stitch in the sequence, touch “edit in sequence” and the stitch will open in sequence. Make your adjustments and touch OK to load it to sewing mode again. Touch cancel to undo.

Note: Touch and hold in the stitch field area to open the smart toolbox to access edit in sequence.

Pop-up Messages in Sequence

To make your sewing experience as convenient as possible, your machine sometimes communicate with you using pop-up messages. Those messages can contain warnings, recommendations, information or prompt you to perform an action.

Below, some of the messages that can appear are listed and explained.

Stitch Cannot be Added in Sequence
Some stitches are not possible to insert in a stitch sequence, for example buttonholes and special stitch menus such as 4-way stitches.

Maximum Number of Stitches Has Been Reached
The stitch you are trying to add will make the stitch sequence too long. Your stitch sequence can be up to approximately 500 mm (20”) long and contain up to 199 stitches and commands. If the stitch sequence exceeds the maximum length this pop-up message will appear.

www.sewshop.eu

www.sewshop.eu

Settings

www.sewshop.eu

Sewing Settings

Automatic Presser Foot Lift

When selected, the machine automatically raises the presser foot in the following situations:

- When stopping with the needle in the down position the presser foot will automatically raise to pivot height.
- After a thread cut the presser foot will be raised to lift position.

When deselected, the presser foot will stay lowered, even if the machine stops with the needle in down position.

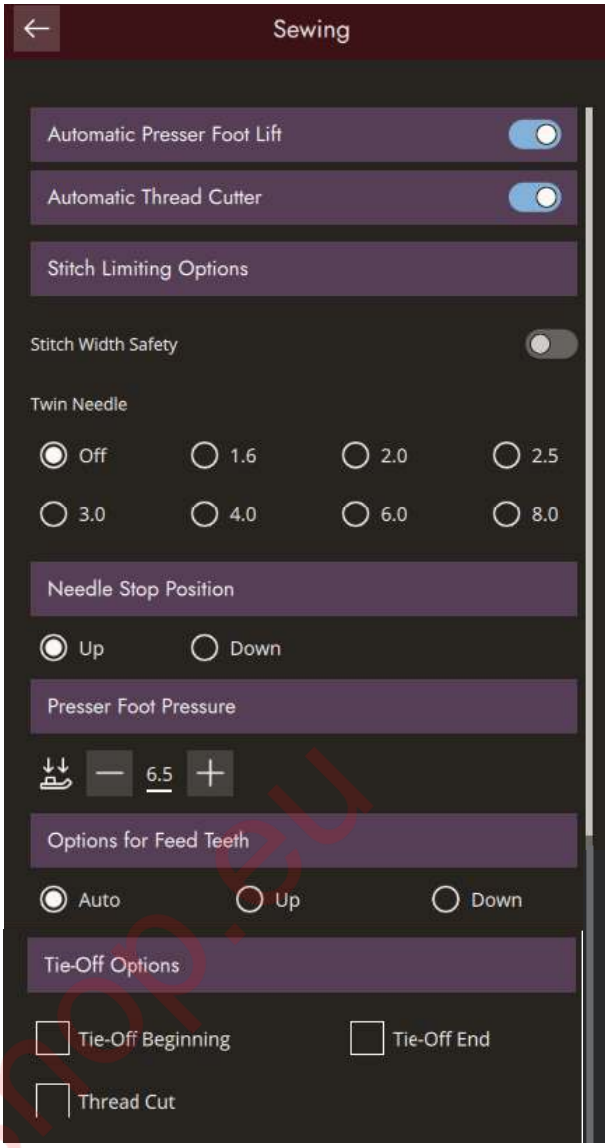

Automatic Thread Cutter

When selected, the threads are cut automatically in the following situations:

- At cut commands in stitches and sequences.
- After sewing a single stitch e.g. a monogram or eyelets.

If deselected, no automatic thread cut will be performed.

Note: Deselect when using optional accessories that are attached in the two holes in the needle plate just above the bobbin cover, to prevent damage to the automatic thread cutter knife located under the needle plate.

Stitch Limiting Options

Set the machine to stitch width safety or select the size of the twin needle to limit the stitch width and stitch positioning. This will minimize the risk of breaking a needle when sewing with accessories that do not allow the use of the entire stitch width.

Needle Stop Position

When up is selected your machine stops with the needle up. When down is selected your machine stops with the needle down.

This setting can also be set by touching the needle up/down button on the front of the machine.

Presser Foot Pressure

In most cases, you do not need to adjust the presser foot pressure. Specialty techniques may require an adjustment. The higher the number the more pressure on the fabric.

www.sewshop.eu

Options for Feed Teeth

When auto is selected (recommended) your machine automatically raises or lowers the feed teeth, depending on the stitch and other selected settings. For example, the feed teeth are lowered when sewing on buttons or when free-motion sewing.

Select up and the feed teeth will be raised for all sewing. Select down and the feed teeth will be lowered for all sewing.

Note: The machine will always lower the feed teeth automatically when raising the presser foot to extra lift position.

Note: The feed teeth options will automatically be reset to auto at the start of a new project from Learning Center or when restarting your machine.

Tie-Off Options

These options let you program a tie-off at the beginning and at the end of a stitch. It is also possible to program a thread cut at the end of a stitch.

Note: For immediate tie-off, use the tie-off button, found on the front of the machine.

Camera & Laser Settings

Presser Foot Recognition

The presser foot recognition feature is using the camera and artificial intelligence (AI), with a neural network that makes predictions, so that your machine can recognize which presser foot is attached. If the presser foot predicted to be attached differs from the one recommended for the selected stitch, this will be indicated in the information area.

Note: The performance of the presser foot recognition feature can be affected by eventual alterations of a presser foot's appearance; due to room lighting, fabric reflectivity properties, position fluctuations, obstructions or physical alterations of the presser foot's surfaces.

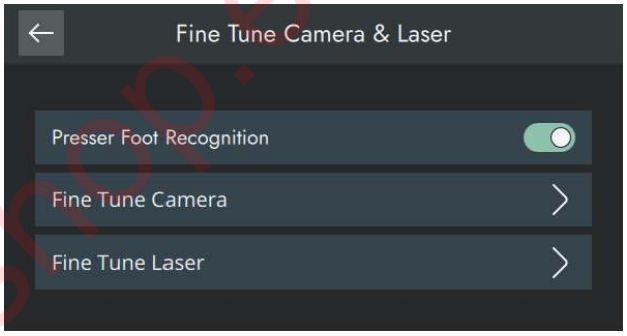

Fine Tune Camera

After frequent use, transportation etc, the camera might need to be adjusted.

Touch fine tune to start the adjustment, then follow the directions given on your screen.

Fine Tune Camera

You can fine tune the center position by using the – or + controls.

www.sewshop.eu

Display & Audio Settings

All settings made in the machine settings will be saved, even when turning your machine off.

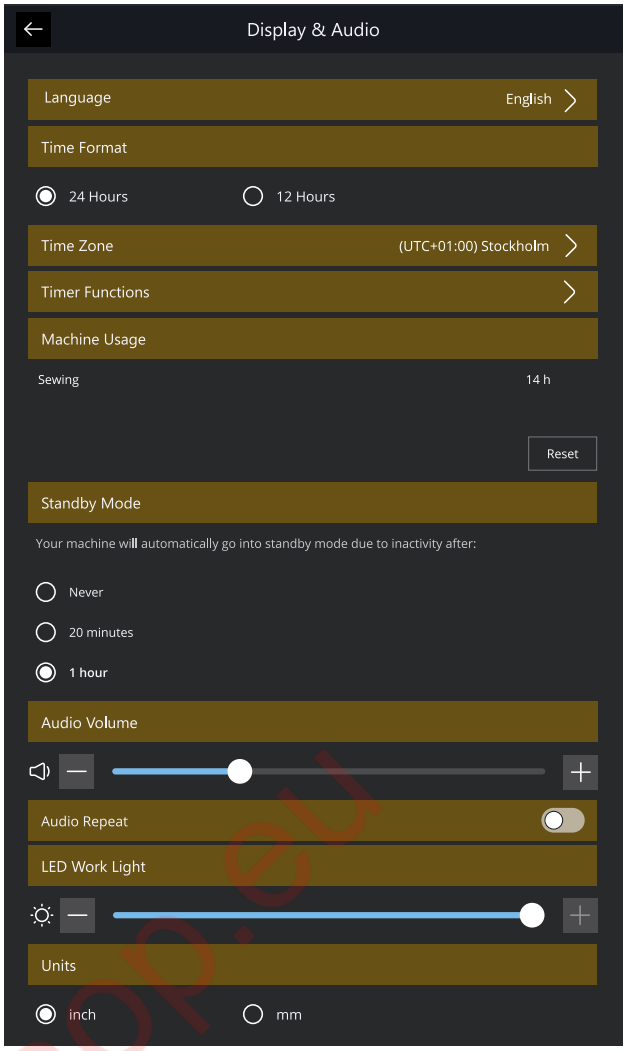

Language

Select your desired language. All texts in your machine will be changed after restart.

Time Format

Set if your clock show a 12– or a –24 hour format.

Time Zone

This is where you set your time zone. The clock is set to UTC (Coordinated Universal Time) standards. For example London is UTC time +/- 0 hours, New York is UTC -5 hours and Sydney is UTC +10 hours. Scroll through the time zones to find the time zone you are in.

Timer Functions

You can set an alarm and find a stopwatch.

Machine Usage

Shows the number of hours sewn on the machine since you last reset the timer. You can reset the counter by touching “Reset”.

Auto Power Off

Your machine will automatically turn off after a duration of time due to inactivity.

The current state will be saved and possible to restore when the machine is activated again.

You will get a notification before the machine is turned off.

You can change the duration of time before your machine turns off in settings.

Audio Volume

Change the audio volume using the slider bar. All sounds in your machine will be affected when the audio volume is changed. When the slider is all the way to the left, the volume is muted.

Audio Repeat

When active, the signal for some warning alerts or attention pop-up messages will be repeated in intervals until the pop-up is closed.

www.sewshop.eu

LED Work Light

Adjust the brightness of the LED lights to adapt to the light conditions in your sewing room. Simply move the slider to the right to make the LED lights brighter or to the left to make them less bright.

Units

Touch millimeter or inch to set the measurement unit you prefer.

Personalize Settings

Machine Nickname

Touch to select a nickname for your machine. This can be useful when owning more than one machine, to distinguish one machine from another when working in CREATIVATE.

User Name

Touch to select a user name.

Color Themes

Set your own favorite color theme to your machine.

Bottom Bar Text

Choose whether or not you want to have text together with your icons in the bottom bar.

Customize Your Workspace

Check this box to allow you to move around functions that are used often, and customize them on the screen.

Lock Screen

When selected, the screen is automatically locked whenever it is inactive for ten seconds. A pop-up is shown on the screen and the screen will remain locked until you touch OK in the pop-up.

Always Show Timer in Top Bar

When selected, the timer will always be shown in the top bar.

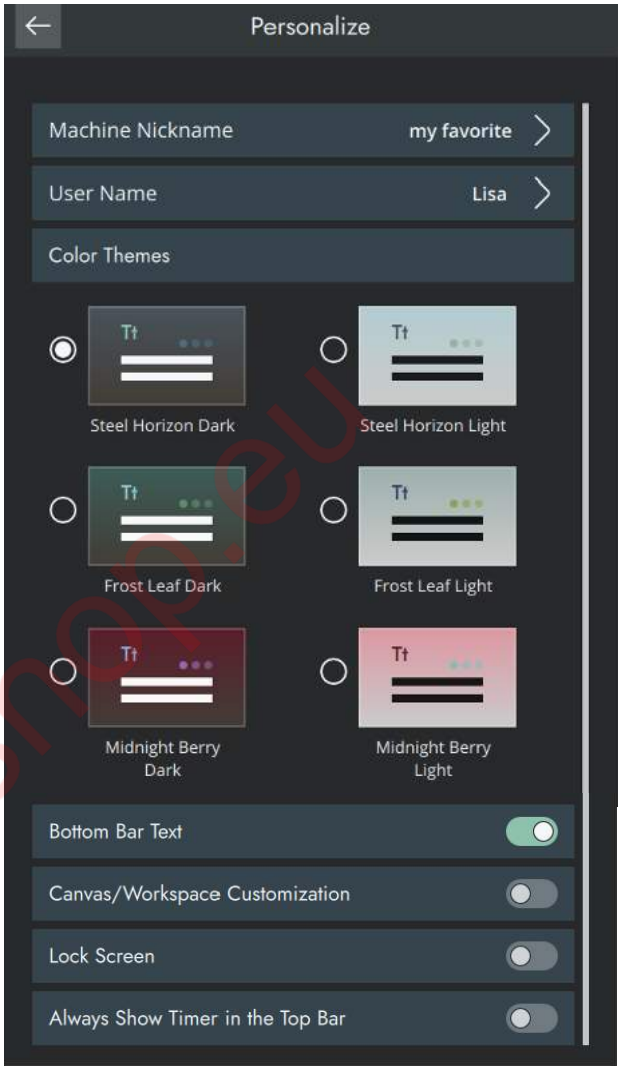

www.sewshop.eu

WiFi Settings

In WiFi settings you can activate/deactivate WiFi on your machine, search for available networks and connect. If connected to a network with internet access the latest firmware update will always be available.

Read more about the WiFi connection in your machine in the WiFi chapter.

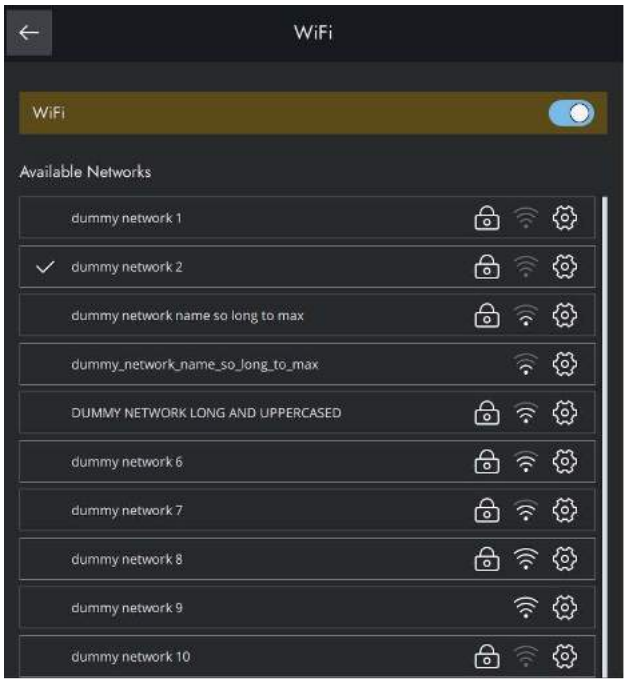

CREATIVATE Settings

In settings you can sign in to your CREATIVATE account. With an account you will be able to access all of the CREATIVATE services.

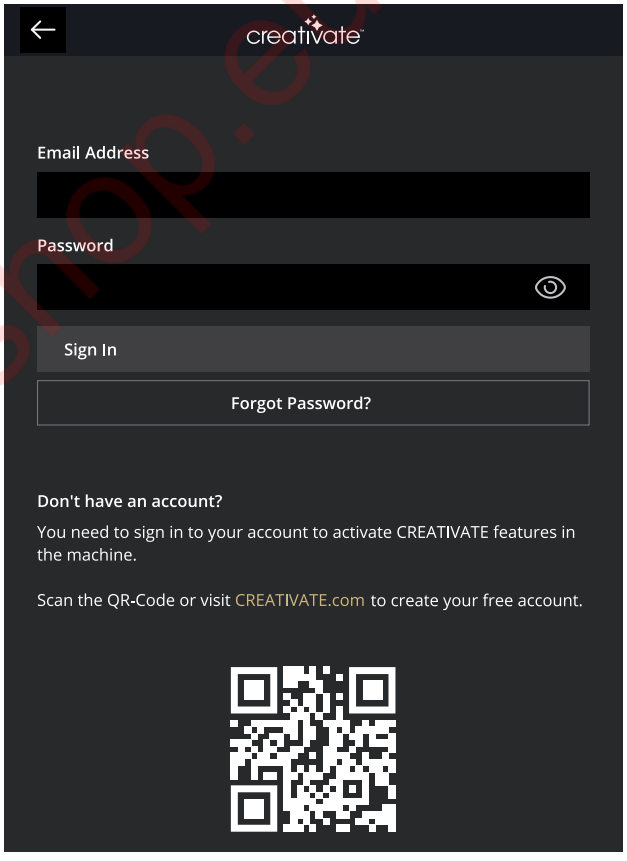

www.sewshop.eu

Machine Information

Machine information contains technical machine information such as: machine serial number, machine MAC address and current firmware. In machine information you can clear user account and files.

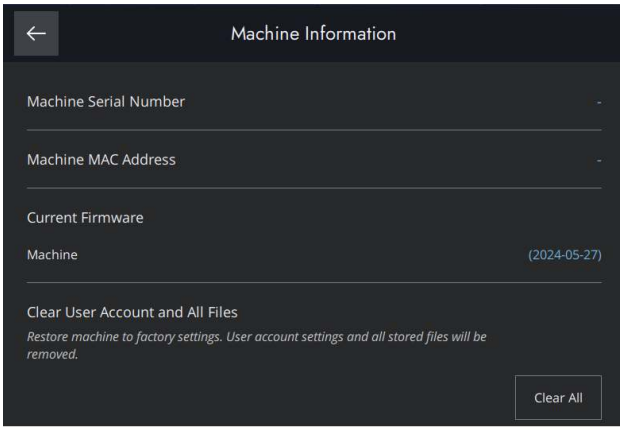

www.sewshop.eu

www.sewshop.eu

www.sewshop.eu

File Manager

File Manager – Overview

Touch the folder icon in the Menu Panel to open File Manager.

File Manager is used to open your files. Store your saved files in the Vault folder or to a USB device connected to your Quilt Expression™ 725 machine.

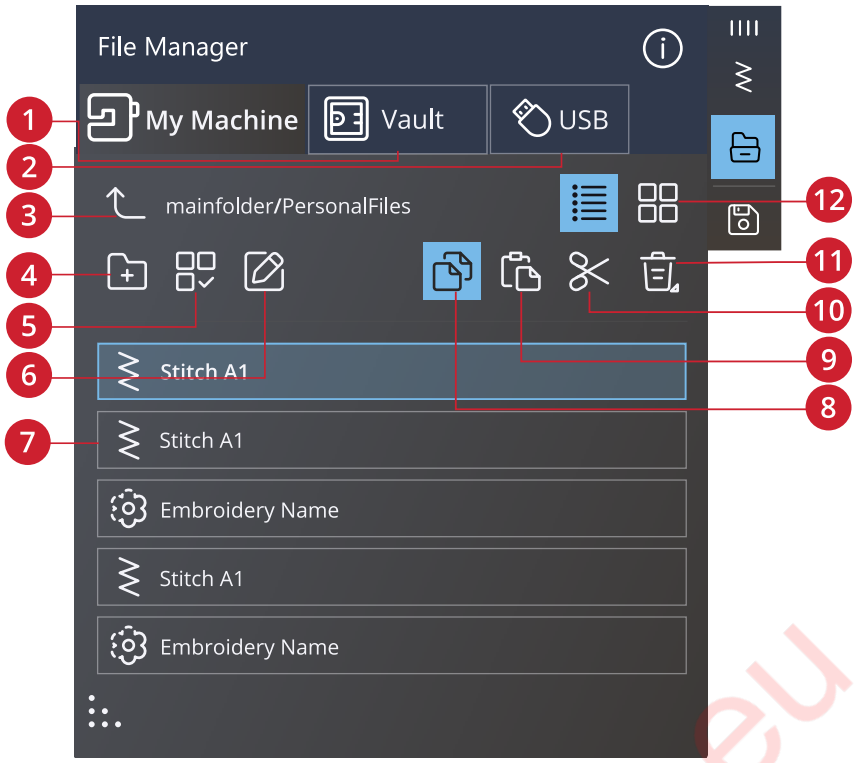

1. Vault
2. USB device
3. Move up one folder
4. Create new folder
5. Select multiple
6. Rename file or folder
7. Selection area
8. Copy
9. Paste
10. Cut
11. Delete
12. List/thumbnail view

File Formats

Your Quilt Expression™ 725 machine can load the following file formats:

- .SPX (stitch file)
- .JOS, .VPP (project files)

Note: If the file type or file version is not supported by your machine, or the file is damaged, it is shown in the selection area as an unrecognized file.

Browse File Manager

Store your files in the Vault folder or to a USB device connected to the USB ports. The USB Device is only available when a USB device is connected to your machine.

Swipe with your finger upwards and downwards to scroll and view the content. Design files and font files are displayed as thumbnail images or with an icon depending on if you have list view or thumbnail view selected.

www.sewshop.eu

Open a File or Folder

Touch a file to read information about the file in the file information area. Touch & hold the file to load it.

If you load a stitch font file, it will be loaded into sequence.

Touch & hold on a folder to open it. The content of the folder will be shown in the selection area.

Select Multiple

If you want to select several files at one time, touch the select multiple icon. While select multiple is activated, touch the files you want to use.

Note: If you try to load a variety of file/folders at the same time that open in different modes/screens, a pop-up message will be shown.

Vault Folder

Save your files to the Vault folder on the machine. Make sure you are signed in to a CREATIVATE account.

USB Device

The USB Device menu is only active when a USB device is connected to the machine. Touch the USB Device menu to display all of the connected devices. Touch a USB Device to explore it.

The files visible in the USB section is listed in File Formats.

Note: If you choose Delete All while in USB, it will delete all the files on your USB, even the ones not visible on the machine.

List/Thumbnail View

Touch the list/thumbnail view icon to toggle between showing the files in a list or as thumbnail icons. In list view each file is shown with the file name and file type. In thumbnail view each file is shown with file name and a thumbnail image of the file.

List view/thumbnail view

Move up One Folder Level

Use the move up one folder level icon to step up through the levels of folders. You can step up all the way to the first level. In the selection area you will see the files and folders for each level as you step up. Touch & hold on a folder to open it.

Move up One Folder Level

Organize

Below are instructions on how to organize your files in file manager.

www.sewshop.eu

Create New Folder

Touch the create new folder icon to create a new folder in the current position. A pop-up message opens where you can enter a name for your folder.

Create New Folder

Rename a File or Folder

To change the name of a file or folder, touch to select it and then touch the rename file or folder icon. A pop-up message opens where you can enter the new name for a file or folder.

Rename

Move a File or Folder

Use cut and paste to move file(s) or folder(s) to another location.

Select the file(s) or folder(s) and then touch the cut icon. Open the folder where you want to place the selection. Touch the paste icon. The file(s) or folder(s) is removed from its original location and now stored in the new folder.

Note: Activate select multiple to be able to select and move more then one file and/or folder the same time.

Cut

Paste

Copy a File or Folder

Use copy and paste to copy file(s) or folder(s) to another location.

Select the file(s) or folder(s), then touch the copy icon. Open the folder where you want to place the selection. Touch the paste icon. The file(s) or folder(s) is now stored in the new folder and the original file(s) or folder (s) still exists in the previous folder.

Note: Activate select multiple to be able to select and move more then one file and/or folder at the same time.

Copy

Paste

Delete a File or Folder

To delete a file or folder, select it and touch the delete icon. A pop-up message will appear so that you can confirm the deletion. If a folder is deleted, all files within the folder are deleted as well.

To delete all files and folders shown in the active folder, touch & hold the delete icon for a few seconds. A pop-up message will appear so that you can confirm the deletion of all content.

Note: If you choose Delete All while in USB, it will delete all the files on your USB, even the ones not visible on the machine.

Delete

www.sewshop.eu

Pop-up Messages in File Manager

To make your experience as convenient as possible, your machine sometimes communicate with you using pop-up messages. Those messages can contain warnings, recommendations, information or prompt you to perform an action.

Below, some of the messages that can appear are listed and explained.

Do You Want to Delete?
When deleting a file or folder, you will need to confirm the deletion in the pop-up message that appears on screen. This will prevent you from deleting anything by mistake.

Not Enough Available Memory
When only a small amount of space is left, your machine will alert you one time. If you continue to fill the space, it will not remind you again, until the space is completely full. Move your files to a USB device by using the cut and paste functions to free up space.

Folder Already Exists
You cannot create a new folder with the same name as another folder on the same level. Create your folder on a different level or enter a different name for the folder.

The Combination of Selected File Types Cannot be Loaded
Some file combinations can not be loaded to the same destination using select multiple.

www.sewshop.eu

www.sewshop.eu

Maintenance

www.sewshop.eu

Cleaning the Machine Exterior

To keep your sewing machine operating well, clean it often. No lubrication (oiling) is needed.

Wipe the exterior surface of your machine with a soft cloth to remove any dust or lint built up.

Wipe the screen with a clean, soft and slightly damp microfiber cloth.

Removing the Needle Plate and Cleaning the Bobbin Area

⚠ *Turn off the machine.*

Remove the presser foot. Remove the bobbin cover. Place the supplied screwdriver under the needle plate as shown and gently turn the screwdriver to pop off the needle plate. Clean the feed teeth with the brush that is included with the accessories.

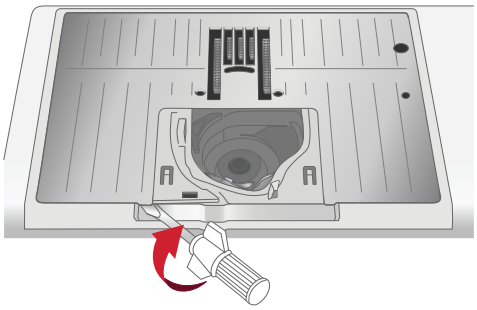

Cleaning Under the Bobbin Area

Clean the area under the bobbin case after sewing several projects or any time you notice an accumulation of lint in the bobbin case area.

Remove the bobbin case holder (A) covering the front part of the bobbin case by lifting it up. Remove the bobbin case (B) by lifting it up. Clean with the brush.

⚠ *Use caution when cleaning around the automatic thread cutter knife (C).*

Put the bobbin case and the bobbin case holder back in place.

Note: Do not blow air into the bobbin case area. The dust and lint will be blown into your machine.

Note: Regularly clean the lint and threads from the bobbin area. Check the area when changing the needle plate.

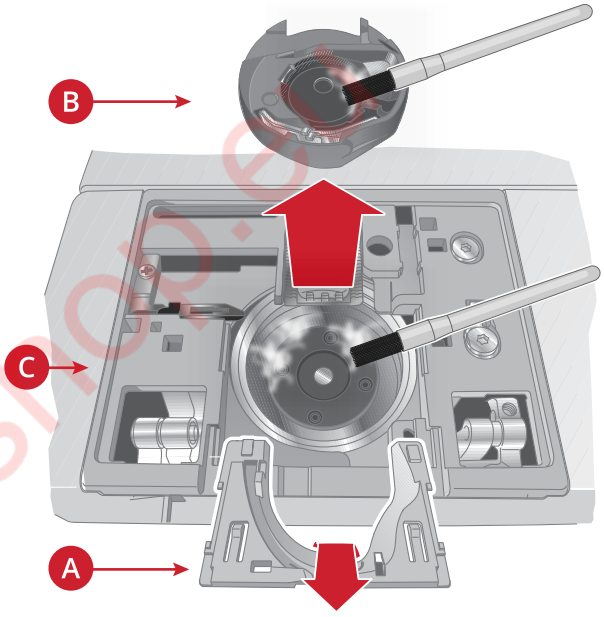

Replacing the Needle Plate

Position the needle plate so that it fits into the notch at the back (A). Press the needle plate down until it clicks into place (B). Replace the bobbin cover.

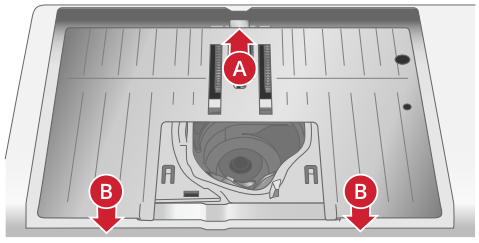

www.sewshop.e

Troubleshooting

In this troubleshooting guide you will find solutions to the problems you may have with your machine. For further information please contact your local authorized PFAFF® retailer who will be happy to help you.

General Problems

Bobbin alarm does not work	Clean lint from bobbin area and use only the original PFAFF® bobbins designed especially for this model.
Thread cutter does not cut the thread	Remove needle plate and clean lint from bobbin area. Enable automatic thread cutter in the settings menu.
Fabric does not feed	Make sure the machine is not set for Free-Motion sewing. Make sure the feed teeth are not set to down in the settings menu.
Wrong stitch, irregular or narrow stitch	Deactivate twin needle or stitch width safety in the settings menu.
The needle breaks	Insert needle correctly as described, see Changing the Needle, page 23. Use a needle suitable for selected fabric. See Selecting Correct Thread/Needle Combination, page 25.
The machine will not sew	Check that all plugs are securely inserted into the machine and the wall socket.
Poor result	Use only accessories designed for your Quilt Expression™ 725 machine. Follow the on-screen recommendations.
The machine screen and/or function buttons do not respond to touch	The sockets and function buttons on the machine can be sensitive to static electricity. If the screen does not respond to touch, turn the machine OFF and then ON again. If the problem persists, contact your authorized PFAFF® retailer.
When sewing in heavy and/or dense fabrics the machine emits a distinct sound different from the sound normally generated when sewing.	The sound is not an indication of malfunction. The machine is equipped with a pulsating needle piercing feature that helps the needle to penetrate heavy and/or dense fabrics. The sound is caused when the presser foot and fabric lift with the needle. Increase the presser foot pressure to prevent the foot from lifting. If the sound does not seem to be related to the pulsating needle piercing feature, contact your authorized PFAFF® retailer for service.

The Automatic Needle Threader Does Not Work Properly

The needle eye is too small for the thread	Use a larger needle size or lighter weight thread. See Selecting Correct Thread/Needle Combination, page 25
Are you using a specialty thread such as an “invisible” or other stretchy thread, metallic or flat metallic thread or heavy weight thread?	Specialty threads may not be caught correctly by the hook on the automatic needle threader. If this happens, the needle will not be threaded. Try using the automatic needle threader again or thread the needle manually.
The needle is not threaded.	The needle threader is wrongly threaded. Re-thread and try again. If using thread that is too thick for the needle, the needle threader may not be able to pull the thread through the needle eye. Change to a lighter weight thread and retry.

www.sewshop.eu

The thread is tangled in the needle threader.	Remove the thread carefully so as not to damage the small hook that runs through the needle eye. Once the thread is removed, re-thread and try again.
The automatic needle threader does not return to its home position.	Contact your authorized PFAFF® retailer for service.

The Machine Skips Stitches

Did you insert the needle properly?	Insert needle correctly as described, see Changing the Needle, page 23.
Did you insert a wrong needle?	Use needle system 130/705 H. Use a needle suitable for selected fabric and thread. See Selecting Correct Thread/Needle Combination, page 25.
Is the needle bent or blunt?	Insert a new needle.
Did you thread the machine properly?	Remove the thread completely and rethread the machine, see Threading the Upper Thread, page 24.
Is the correct presser foot used?	Attach correct presser foot.
Is the needle too small for the thread?	Change the needle.
Is the fabric moving up and down with the needle when Free-Motion sewing?	If using the 6A Embroidery/Sensormatic Free-Motion Foot, decrease the pivot height in settings menu in small increments until the problem is solved.

Needle Thread Breaks

Did you insert the needle properly?	Insert needle correctly, see Changing the Needle, page 23.
Did you insert a wrong needle?	Use needle system 130/705 H. Use a needle suitable for selected fabric and thread. See Selecting Correct Thread/Needle Combination, page 25.
Is the needle bent or blunt?	Insert a new needle.
Did you thread the machine properly?	Remove the thread completely and rethread the machine, see Threading the Upper Thread, page 24.
Does the thread slide down and get caught under the thread spool?	Use a thread net over the spool. See .
Is the needle too small for the thread?	Change the needle to the proper size for the thread.
Are you using poor thread with slubs or thread which has become dry?	Change to a new high quality thread purchased from an authorized PFAFF® retailer.
If using a spool cap on top of the spool, is it too small so the thread snags at the top of the spool?	Attach a spool cap slightly larger than the actual thread spool.
Is the best spool pin position used?	Try a different spool pin position (vertical or horizontal).
Is the needle plate hole damaged?	Change the needle plate.
Is the thread tension too high for selected thread?	Lower the thread tension in small increments until problem is solved.

Bobbin Thread Breaks

Is the correct bobbin used?	Use only bobbins especially designed for the Quilt Expression™ 725 machine.
Did you insert the bobbin properly?	Check the bobbin thread.

www.sewshop.eu

Is the needle plate hole damaged?	Change the needle plate.
Is the bobbin area full of lint?	Clean lint from bobbin area and use only the original bobbins approved for this model.
Is the bobbin wound correctly?	Wind a new bobbin.

The Seam has Uneven Stitches

Is the thread tension correct?	Check needle thread tension. Remove the thread completely and rethread the machine, see Threading the Upper Thread, page 24.
Is the thread you are using thick or slubbed?	Change the thread.
Is the bobbin thread evenly wound?	Check bobbin winding.
Is a correct needle used?	Insert a proper needle correctly as described, see Changing the Needle, page 23. Use a needle suitable for selected fabric. See Selecting Correct Thread/Needle Combination, page 25.

The Machine Does Not Feed or Feeds Irregularly

Did you thread the machine properly?	Remove the thread completely and rethread the machine, see Threading the Upper Thread, page 24.
Has sewing lint collected between the feed teeth?	Remove the needle plate and clean the feed teeth with the brush.
Is the Free-Motion setting on?	Turn off Free-Motion setting in sewing mode.
Are the feed teeth set to down?	Make sure the feed teeth are not set to down in the settings menu.
Is the correct presser foot used?	Attach correct presser foot.

Troubleshooting Connectivity

The Machine Cannot Connect to a WiFi Network

The machine will not connect to a WiFi network	Make sure that WiFi is enabled on your machine. Touch the WiFi button on the top bar or go to WiFi settings. Make sure that the machine detects a signal from your WiFi network. If there is no signal, move the machine closer to the WiFi router. Make sure you have selected your WiFi network.
The machine has no Internet connection	Make sure that your WiFi router has access to the Internet.
The WiFi network is password protected	Make sure that you have selected your WiFi network and entered the correct password. If you do not know the password, contact the administrator of your network.

Service

Have your sewing machine serviced regularly by your local authorized retailer!

If you have followed this troubleshooting information and still have problems, contact your retailer. It may be helpful to bring the fabric, thread and stabilizer you are using with you. If you have a stitch out that shows the problem,

www.sewshop.eu

please bring that as well. A sewing sample will often give better information than words and help your technician diagnose the problem.

Non-Original Parts and Accessories

The warranty does not cover any defect or damage caused by use of non-original accessories or parts.

Technical specification

Sewing Speed 1000 stitches/minute maximum	**Rated Voltage** 100–240V, 50–60Hz	**Nominal Consumption** <100W
Light LEDs	**Foot Control** Model: FR5	**Safety Class** II (Europe)
WiFi Module Frequency: 2.4 GHz 802.11 b/g/n Transmitting power: +17 dBm Reciever sensitivity: –97 dBm	**Machine Dimensions** Length: 571 mm Width: 220 mm Height: 307 mm	**Net Weight** Machine only: 11.5 kg
Non-Load Power Consumption 0.5W		

The technical specifications and this user's guide can be changed without prior notice.

www.sewshop.eu

You have purchased a modern, updatable sewing and embroidery machine. As we regularly release firmware updates, it is possible that there may be some differences between the machine firmware and the firmware described in the user's guide. Consult your local authorized PFAFF® retailer, and be sure to visit our website at www.pfaff.com for the latest updates of the firmware and the user's guide.

We reserve the right to change the machine equipment and the assortment of accessories without prior notice, or make modifications to the performance or design. Such modifications, however, will always be to the benefit of the user and the product.

INTELLECTUAL PROPERTY

Patents protecting this product are listed on a label positioned underneath the Sewing Machine.
CREATIVATE, PFAFF, PFAFF and PERFECTION STARTS HERE are trademarks of Singer Sourcing Limited LLCor its Affiliates.

www.sewshop.eu

Please note that on disposal, this product must be safely recycled in accordance with relevant National legislation relating to electrical/ electronic products. Do not dispose of electrical appliances as unsorted municipal waste, use separate collection facilities. Contact your local government for information regarding the collection systems available. When replacing old appliances with new ones, the retailer may be legally obligated to take back your old appliance for disposal free of charge.

If electrical appliances are disposed of in landfills or dumps, hazardous substances can leak into the groundwater and get into the food chain, damaging your health and well-being.

Importer to the UK:
VSM UK
Ravensbank House, Ravensbank Drive
North Moons Moat, Redditch. B98 9NA, United Kingdom

Manufacturer
VSM GROUP AB, **SVP Worldwide**
Soldattorpsgatan 3, SE-54474, Jonkoping, SWEDEN

PFAFF

Perfection starts here.™

www.sewshop.eu

www.pfaff.com

4710980-26H · © 2025 Singer Sourcing Limited LLC or its Affiliates · All rights reserved